CCD-TRV32/TRV34/TRV34PK/TRV44/TRV52/TRV53/TRV312/TRV512(NTSC)
CCD-TRV14E/TRV24E/TRV44E(PAL)
RMT-713

SERVICE MANUAL

Photo : CCD-TRV53

video 8
Handycam

B MECHANISM

US Model
CCD-TRV32/TRV52/TRV53/
TRV312/TRV512(NTSC)
Canadian Model
CCD-TRV53(NTSC)
AEP Model
UK Model
CCD-TRV14E/TRV24E(PAL)
E Model
CCD-TRV34/TRV34PK/TRV44(NTSC)
CCD-TRV14E/TRV24E/TRV44E(PAL)
Australian Model
CCD-TRV14E/TRV24E/TRV44E(PAL)
Hong Kong Model
CCD-TRV34/TRV44(NTSC)
CCD-TRV14E/TRV24E/TRV44E(PAL)
Tourist Model
CCD-TRV34(NTSC)
CCD-TRV14E/TRV24E/TRV44E(PAL)

- CCD-TRV34PK is model that carring bag are added in CCD-TRV34.
- CCD-TRV34PK is different from CCD-TRV34 only in the accessory and packing materials.

For MECHANISM ADJUSTMENT, refer to the "8mm Video MECHANICAL ADJUSTMENT MANUAL Ⅶ" (9-973-801-11).

SPECIFICATIONS

Video camera recorder

System

Video recording system
Two rotary heads, Helical scanning, FM system

Audio recording system
Rotary heads, FM system

Usable cassette
8 mm video format cassette (standard 8 mm)

Recording/Playback time
SP mode: 1 hour and 30 minutes (P5-90)
LP mode: 3 hours (P5-90)

Fastforward/rewind time
Approx. 5 min. (P5-90)

Image device
CCD (Charge Coupled Device)

Colour temperature
Auto

Recommended illumination
More than 100 lx

LCD screen

On-screen display
TN LCD/TFT active matrix method

Input and Output connectors

Video output
Phono jack, 1 Vp-p, 75 ohm, unbalanced

RFU DC OUT
Special minijack, DC 5 V

LANC control jack
Stereo mini-minijack (ø 2.5 mm)

MIC jack
Minijack, 0.388 mV, low impedance with 2.5 to 3 V DC output, impedance 6.8 kilohm (ø 3.5 mm)

Speaker
Dynamic-speaker

General

Power requirements
7.5 V (AC power adaptor)

Operating temperature
0°C to 40°C (32°F to 104°F)

Storage temperature
–20°C to +60°C (–4°F to +140°F)

Dimensions
Approx. 112 x 102 x 201 mm (4 ½ x 4 ⅛ x 8 inches) (w/h/d)

Microphone
Electret condenser microphone, monaural type

AC power adaptor

Power requirements
110 – 240 V AC, 50/60Hz

Power consumption
AC-V16/V17: 20 W
AC-V16A/V17A: 22 W

Output voltage
DC OUT in operation mode
7.5 V, 1.8 A
Battery charge terminal
10 V, 1.1 A in charge mode

Operating temperature
0°C to 40°C (32°F to 104°F)

Storage temperature
–20°C to +60°C (–4°F to +140°F)

Dimensions (Approx.)
166 x 43 x 75 mm (6 5/8 x 1 11/16 x 3 inches) (w/h/d) including projecting parts and controls

Mass (Approx.)
AC-V16: 420 g (15 oz)
AC-V16A: 450 g (16 oz)
AC-V17: 440 g (16 oz)
AC-V17A: 460 g (16 oz)

Design and specifications are subject to change without notice.

— Continued on next page —

8 VIDEO CAMERA RECORDER

MICROFILM

SONY

NTSC MODEL

Model	TRV32	TRV34	TRV44	TRV52	TRV53	TRV312	TRV512
Video signal	NTSC color,EIR standards						
Viewfinder Electronic viewfinder	Black and white				Colour	Black and white	
Lens Combined power zoom lens, F1.4-2.4 Filter diameter 37mm (1 1/2inches)	15×(Optical), 30×(Digital)	15×(Optical), 180×(Digital)		15×(Optical), 30×(Digital)			
Forcal distance f=4.1-61.5mm (3/16-2 1/2inches)	When converted to 35mm still camera 47-705mm (1 7/8-27 7/8inches)						
Minimum illumination	2 lux at F1.4	0.7 lux at F1.4		2 lux at F1.4			
Illumination range	2 to 100,000 lux	0.7 to 100,000 lux		2 to 100,000 lux			
Picture	3 inches measured diagonally 59.5 × 43.2mm(2 3/8 × 1 3/4inches)		3.5 inches measured diagonally 72.4×0.38mm(2 7/8 × 2inches)		3 inches measured diagonally 59.5×43.2mm(2 3/8×1 3/4inches)		3.5 inches measured diagonally 72.4 ×50.38mm(2 7/8 × 2inches)
Total dot number	86,622(383 × 234)		105,380 (479 × 220)		86,622 (383 × 234)		105,380 (479 × 220)
Audio output 327mV, (at load impedance 47 kilohm), impedance less than 2.2 kilohm	Monaural,Phone jack Mini jack	Phone jack (2 :stereo L and R)			Monaural,Phone jack Mini jack		Phone jack (2: stereo L and R)
Earphone jack	MIni jack	×			MIni jack		×
Headphone jack	×	Stereo mini jack			×		Stereo mini jack
Average power consumption During camera recording using the LCD	4.7W		5W		4.7W		5W
Average power consumption During camera recording using the viewfinder	3.5W			3.6W	3.5W		3.6W
Mass (Approx.)	2 id 1 oz (950g) Excluding the batter pack , lithium battery, cassette and shoulder strap 2 id 7 oz (1.2kg) Including the battery pack NP-33, lithium battery CR2025, cassette P6-120 and shoulder strap		2 id 1 oz (960g) Excluding the batter pack,ithium battery, cassette and shoulder strap 2 id 7 oz (1.2kg) Including the battery pack NP-33, lithium battery CR2025, cassette P6-120 and shoulder strap		2 id 1 oz (950g) Excluding the batter pack, lithium battery, cassette and shoulder strap 2 id 7 oz (1.2kg) Including the battery pack NP-33,lithium battery CR2025, cassette P6-120 and shoulder strap		2 id 1 oz (960g) Excluding the batter pack, lithium battery, cassette and shoulder strap 2 id 7 oz (1.2kg) Including the battery pack NP-33, lithium battery CR2025,cassette P6-120 andshoulder strap
Application	Sony battery pack NP-33(supplied), NP-60D, NP-C65, NP-68, NP-80/80D, NP-98/98D	Sony battery pack NP-33(supplied), NP-55H, NP-C65, NP-66, NP-67, NP-77H, NP-98		Sony battery pack NP-33(supplied), NP-60D, NP-C65, NP-68, NP-80/80D, NP-98/98D			

PAL MODEL

Model	TRV14E	TRV24E	TRV44
Video signal	PAL color, CCIR standards		
Viewfinder Electronic viewfinder	Black and white		
Lens Combined power zoom lens, F1.4-2.4 Filter diameter 37mm (1 1/2inches)	15× (Optical) When converted to 35mm	15× (Optical), 30× (Digital)	15× (Optical), 180× (Digital)
Forcal distance f=4.1-61.5mm (3/16-2 1/2inches)	still camera 39-585mm (1 19/16-23 1/8inches)	When converted to 35mm still camera 47-705mm(1 7/8-27 7/8inches)	
Minimum illumination	0.4 lux at F1.4	0.7 lux at F1.4	
Illumination range	0.4 to 100,000 lux	0.7 to 100,000 lux	
Picture	2.5 inches measured diagonally 50.2 × 37.1mm(2 × 1 1/2inches)	2.5 inches measured diagonally 50.3 × 37.4mm(2 × 1 1/2inches)	3.5 inches measured diagonally 72.4×50.38mm(2 7/8 × 2inches)
Total dot number	61,600(280 × 220)		105,380(479 × 220)
Audio output 327mV, (at load impedance 47 kilohm), impedance less than 2.2 kilohm	Monaural, Phone jack		Phone jack (2 : stereo L and R)
Earphone jack	Mini jack		×
Headphone jack	×		Stereo mini jack
Average power consumption During camera recording using the LCD	4.2W	4.5W	5W
Average power consumption During camera recording using the viewfinder	3.3W	3.5W	
Mass (Approx.)	1 id 15 oz (890g) Excluding the batter pack, lithium battery, cassette and shoulder strap 2 id 6 oz (1.1kg) Including the battery pack NP-33, lithium battery CR2025, cassette P5-90 and shoulder strap		2 id 1 oz (960g) Excluding the batter pack, lithium battery, cassette and shoulder strap 2 id 7 oz (1.2kg) Including the battery pack NP-33,lithium battery CR2025, cassette P6-120 and shoulder strap
Application	Sony battery pack NP-33(supplied), NP-55H, NP-C65, NP-66, NP-67, NP-77H, NP-98		

• Table for difference of functions

Model	TRV32	TRV312	TRV34	TRV44	TRV52	TRV512	TRV53	TRV14E	TRV24E	TRV44E
Signal	NTSC	NTSC	NTSC	NTSC	NTSC	NTSC	NTSC	PAL	PAL	PAL
Destination	US	US	E/HK/JE	E/HK	US	US	US/CND	AEP/UK/E/AUS/HK/JE	AEP/UK/E/AUS/HK/JE	E/AUS/HK/JE
Viewfinder	B/W	B/W	B/W	B/W	B/W	B/W	COLOR	B/W	B/W	B/W
Steady shot	○	○	○	○	○	○	×	×	○	○
Digital zoom	○ (30 ×)	○ (30 ×)	○ (180 ×)	○ (180 ×)	○ (30 ×)	○ (30 ×)	○ (30 ×)	×	○ (180 ×)	○ (180 ×)
Wide mode	○	○	○	○	○	○	○	×	○	○
Audio	MONO	MONO	STEREO	STEREO	STEREO	STEREO	MONO	MONO	MONO	STEREO
IR	×	×	×	×	×	×	○	×	×	×
LCD	3	3	3	3.5	3.5	3.5	3	2.5	2.5	3.5

Abbreviation

CND : Canadian model
AUS : Australian model
HK : Hong Kong model
JE : Tourist model
IR : Infrared communication
B/W : Black and white

Checking supplied accessories

Check that the following accessories are supplied with your camcorder.

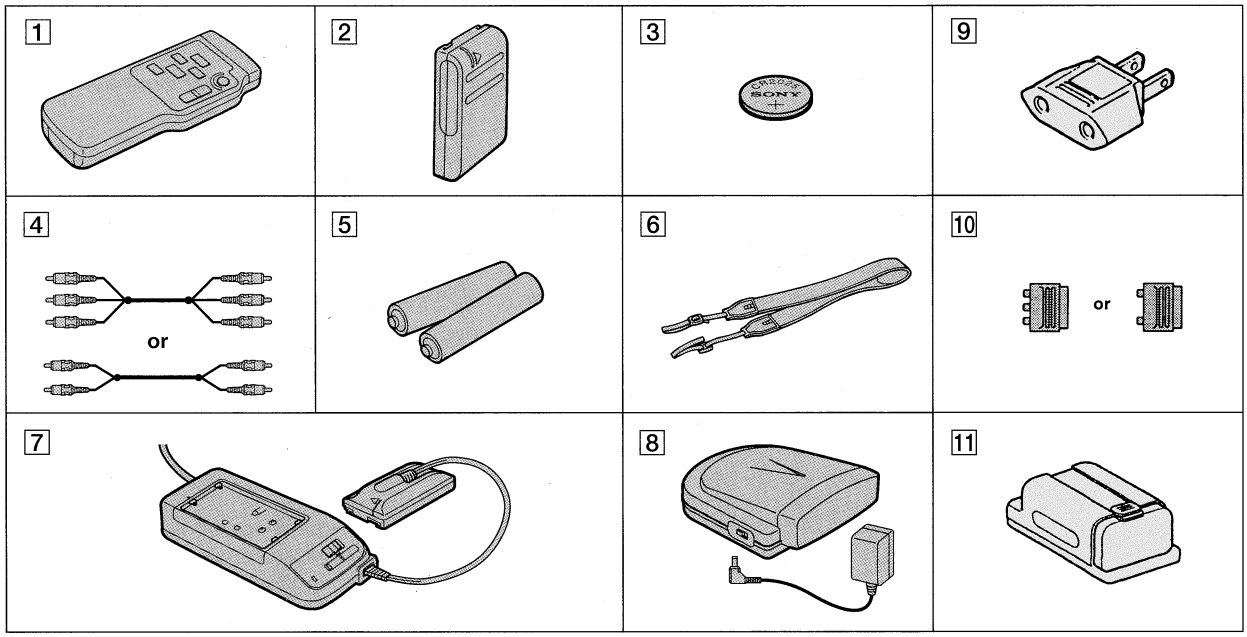

1 **Wireless Remote Commander (1)**
2 **NP-33 Battery Pack (1)**
3 **CR2025 Lithium Battery (1)**
Already installed in the camcorder.
4 **A/V connecting cable (1)**
5 **R6 (size AA) battery for Remote Commander (2)**
6 **Shoulder strap (1)**
7 **AC-V16/V16A/V17/V17A AC power adaptor (1)**
8 **AV cordless IR receiver (1) and AC power adaptor (1)**
CCD-TRV53 only
9 **Adaptor conversion 2P (1)**
Hong Kong only
10 **21-pin adaptor (1)**
AEP only
11 **Battery case (1)**

SAFETY-RELATED COMPONENT WARNING!!

COMPONENTS IDENTIFIED BY MARK ⚠ OR DOTTED LINE WITH MARK ⚠ ON THE SCHEMATIC DIAGRAMS AND IN THE PARTS LIST ARE CRITICAL TO SAFE OPERATION. REPLACE THESE COMPONENTS WITH SONY PARTS WHOSE PART NUMBERS APPEAR AS SHOWN IN THIS MANUAL OR IN SUPPLEMENTS PUBLISHED BY SONY.

ATTENTION AU COMPOSANT AYANT RAPPORT À LA SÉCURITÉ!

LES COMPOSANTS IDENTIFÉS PAR UNE MARQUE ⚠ SUR LES DIAGRAMMES SCHÉMATIQUES ET LA LISTE DES PIÈCES SONT CRITIQUES POUR LA SÉCURITÉ DE FONCTIONNEMENT. NE REMPLACER CES COMPOSANTS QUE PAR DES PIÈSES SONY DONT LES NUMÉROS SONT DONNÉS DANS CE MANUEL OU DANS LES SUPPÉMENTS PUBLIÉS PAR SONY.

SAFETY CHECK-OUT

After correcting the original service problem, perform the following safety checks before releasing the set to the customer.

1. Check the area of your repair for unsoldered or poorly-soldered connections. Check the entire board surface for solder splashes and bridges.
2. Check the interboard wiring to ensure that no wires are "pinched" or contact high-wattage resistors.
3. Look for unauthorized replacement parts, par-ticularly transistors, that were installed during a previous repair. Point them out to the customer and recommend their replacement.
4. Look for parts which, through functioning, show obvious signs of deterioration. Point them out to the customer and recommend their replace-ment.
5. Check the B+ voltage to see it is at the values specified.
6. Flexible Circuit Board Repairing
   - Keep the temperature of the soldering iron around 270˚C during repairing.
   - Do not touch the soldering iron on the same conductor of the circuit board (within 3 times).
   - Be careful not to apply force on the conductor when soldering or unsoldering.

TABLE OF CONTENTS

SERVICE NOTE ····· 3-4

1. GENERAL

Getting started
Charging and installing the battery pack ····· 1-1
Inserting a cassette ····· 1-1
Basic operations
Camera recording ····· 1-2
Letting the subject monitor the shot ····· 1-3
Hints for better shooting ····· 1-3
Checking the recorded picture ····· 1-4
Playing back a tape ····· 1-4
Searching for the end of the picture ····· 1-5
Advanced operations
Using alternative power sources ····· 1-5
Changing the mode settings ····· 1-6
Recording with the date or time ····· 1-7
Selecting the START/STOP mode ····· 1-7
Fade-in and fade-out ····· 1-7
Enjoy picture effect ····· 1-8
Using the wide mode function ····· 1-8
Focusing manually ····· 1-9
Using the PROGRAM AE function ····· 1-9
Shooting with backlighting ····· 1-10
Releasing the STEADY SHOT function ····· 1-10
Superimposing a title ····· 1-10
Making your own titles ····· 1-11
Watching on a TV screen ····· 1-11
Editing onto another tape ····· 1-12
Additional information
Changing the lithium battery in the camcorder ····· 1-12
Resetting the date and time ····· 1-12
Playback modes ····· 1-13
Tips for using the battery pack ····· 1-13
Maintenance information and precautions ····· 1-14
Using your camcorder abroad ····· 1-15
Trouble check ····· 1-16
Identifying the parts ····· 1-17
Warning indicators ····· 1-19

2. DISASSEMBLY

2-1(1). REMOVAL OF MA-297 BOARD, F PANEL ASSEMBLY AND MICROPHONE (EXCEPT TRV14E/TRV24E MODEL) ····· 2-1
2-1(2). REMOVAL OF MA-296 BOARD, F PANEL ASSEMBLY AND MICROPHONE (TRV14E/TRV24E MODEL) ····· 2-1
2-2. REMOVAL OF CABINET ASSEMBLY ····· 2
2-3. REMOVAL OF CASSETTE LID ASSEMBLY, LS LID, JK-154/155 and SE-60 BOARD ····· 2-2
2-4. REMOVAL OF DD-94 BOARD ····· 2-3
2-5. REMOVAL OF ZOOM LENS, CD-164/165 and IR-28 BOARD ····· 2-3
2-6. REMOVAL OF VC-188 BOARD ····· 2-4
2-7. REMOVAL OF CF-45/46 BOARD ····· 2-4
2-8(1). REMOVAL OF EVF BLOCK ASSEMBLY (EXCEPT TRV14E/TRV24E MODEL) ····· 2-5
2-8(2). REMOVAL OF EVF BLOCK ASSEMBLY (TRV14E/TRV24E MODEL) ····· 2-5
2-9(1). REMOVAL OF EVF CABINET and VF-102 BOARD (TRV14E/TRV24E MODEL) ····· 2-6
2-9(2). REMOVAL OF EVF CABINET, VF-109, LB-49 and VF-110 BOARD (TRV53 MODEL) ····· 2-6
2-9(3). REMOVAL OF EVF CABINET and VF-102 BOARD (EXCEPT TRV53/TRV14E/TRV24E MODEL) ····· 2-7
2-10(1). REMOVAL OF P CABINET AND LCD ASSEMBLY (EXCEPT TRV14E/TRV24E MODEL) ····· 2-8
2-10(2). REMOVAL OF P CABINET AND LCD ASSEMBLY (TRV14E/TRV24E MODEL) ····· 2-8
2-11(1). REMOVAL OF PD-76/77 BOARD (EXCEPT TRV14E/TRV24E MODEL) ····· 2-9
2-11(2). REMOVAL OF SD-24/25 AND PD-74/75 BOARD (TRV14E/TRV24E MODEL) ····· 2-9
2-12. INTERNAL VIEWS ····· 2-10
2-13. CIRCUIT BOARDS LOCATION ····· 2-11

3. BLOCK DIAGRAMS

3-1. OVERALL (1) BLOCK DIAGRAM ····· 3-1
3-2. OVERALL (2) BLOCK DIAGRAM ····· 3-4
3-3. CAMERA BLOCK DIAGRAM ····· 3-7
3-4. VIDEO/AUDIO BLOCK DIAGRAM ····· 3-10
3-5. SYSTEM CONTROL BLOCK DIAGRAM ····· 3-13
3-6. MODE CONTROL BLOCK DIAGRAM ····· 3-15
3-7. EVF BLOCK DIAGRAM ····· 3-17
3-8. LCD (A) BLOCK DIAGRAM ····· 3-19
3-9. LCD (B) BLOCK DIAGRAM ····· 3-21
3-10. LCD (C) BLOCK DIAGRAM ····· 3-23
3-11. LCD (D) BLOCK DIAGRAM ····· 3-25
3-12. SERVO BLOCK DIAGRAM ····· 3-28
3-13. POWER (1) BLOCK DIAGRAM ····· 3-31
POWER (2) BLOCK DIAGRAM ····· 3-34

4. PRINTED WIRING BOARDS AND SCHEMATIC DIAGRAMS

FRAME SCHEMATIC DIAGRAM ····· 4-1
PRINTED WIRING BOARDS AND SCHEMATIC DIAGRAMS ····· 4-4
• VC-188 (MAIN) PRINTED WIRING BOARD ····· 4-5
• VC-188 (CAMERA 1) SCHEMATIC DIAGRAM ·· 4-13
• VC-188 (CAMERA 2) SCHEMATIC DIAGRAM ·· 4-17
• VC-188 (VIDEO) SCHEMATIC DIAGRAM ····· 4-21
• VC-188 (MODE CONTROL), FP-249 (MODE SENSOR) PRINTED WIRING BOARD AND SCHEMATIC DIAGRAM ····· 4-25
• VC-188 (IN/OUT) SCHEMATIC DIAGRAM ····· 4-29
• VC-188 (LD) SCHEMATIC DIAGRAM ····· 4-33
• VC-188 (PJ) SCHEMATIC DIAGRAM ····· 4-35
• VC-188 (AUDIO) SCHEMATIC DIAGRAM ····· 4-37
• CD-164/165 (CCD IMAGER) PRINTED WIRING BOARD AND SCHEMATIC DIAGRAM ····· 4-40
• JK-154/155 (JACK) PRINTED WIRING BOARD AND SCHEMATIC DIAGRAM ····· 4-43
• MA-296/297 (AUDIO) PRINTED WIRING BOARD ····· 4-47
• MA-296/297 (AUDIO) SCHEMATIC DIAGRAM · 4-51
• IR-28 (INFRARED COMMUNICATION) PRINTED WIRING BOARD AND SCHEMATIC DIAGRAM ····· 4-54
• CF-45 (SYSTEM CONTROL) PRINTED WIRING BOARD ····· 4-57
• CF-46 (SYSTEM CONTROL) PRINTED WIRING BOARD ····· 4-60
• CF-45/46 (SYSTEM CONTROL) SCHEMATIC DIAGRAM ····· 4-63
• VF-110 (RGB DECODER), VF-109 (H AFC), LB-49 (BACK LIGHT) PRINTED WIRING BOARDS ····· 4-66
• VF-110 (RGB DECODER) SCHEMATIC DIAGRAMS ····· 4-69
• VF-109 (H AFC), LB-49 (BACK LIGHT) SCHEMATIC DIAGRAMS ····· 4-72
• VF-102 (EVF) PRINTED WIRING BOARD AND SCHEMATIC DIAGRAM ····· 4-75
• DD-94 (POWER) SCHEMATIC DIAGRAM ····· 4-79
• DD-94 (POWER) PRINTED WIRING BOARD ····· 4-83
• SE-60 (STEADY SHOT) PRINTED WIRING BOARD ····· 4-85
• SE-60 (STEADY SHOT) SCHEMATIC DIAGRAM ····· 4-87
• PD-76 (LCD) PRINTED WIRING BOARD ····· 4-89
• PD-76 (LCD) SCHEMATIC DIAGRAM ····· 4-91
• PD-77 (LCD) SCHEMATIC DIAGRAM ····· 4-101
• PD-77 (LCD) PRINTED WIRING BOARD ····· 4-103
• PD-74 (LCD DRIVER) PRINTED WIRING BOARD ····· 4-113
• PD-74 (LCD DRIVER) SCHEMATIC DIAGRAM ····· 4-115
• MF-7800 (FOCUS) SCHEMATIC DIAGRAM ····· 4-118
• PD-74 (LCD DRIVER) SCHEMATIC DIAGRAM ····· 4-119
• SD-24 (RGB) SCHEMATIC DIAGRAM ····· 4-121
• SD-24 (RGB) PRINTED WIRING BOARD ····· 4-127
• PD-75 (LCD DRIVER) PRINTED WIRING BOARD ····· 4-129
• PD-75 (LCD DRIVER) SCHEMATIC DIAGRAM ····· 4-131
• SD-25 (RGB) SCHEMATIC DIAGRAM ····· 4-137
• SD-25 (RGB) PRINTED WIRING BOARD ····· 4-143

5. REPAIR PARTS LIST

5-1-1. OVERALL SECTION ····· 5-1
5-1-2(1). CABINET (L), F PANEL SECTION (EXCEPT TRV14E/TRV24E MODEL) ····· 5-2
5-1-2(2). CABINET (L), F PANEL SECTION (TRV14E/TRV24E MODEL) ····· 5-3
5-1-3(1). CABINET (R), LCD SECTION (EXCEPT TRV14E/TRV24E MODEL) ····· 5-4
5-1-3(2). CABINET (R), LCD SECTION (TRV14E/TRV24E MODEL) ····· 5-5
5-1-4. MAIN SECTION ····· 5-6
5-1-5(1). EVF SECTION (TRV53 MODEL) ····· 5-7
5-1-5(2). EVF SECTION (TRV14E/TRV24E MODEL) ····· 5-8
5-1-5(3). EVF SECTION (EXCEPT TRV53/TRV14E/TRV24E MODEL) ····· 5-9
5-1-6. ZOOM LENS BLOCK SECTION (LSV-510A) ····· 5-10
5-1-7. CASSETTE COMPARTMENT BLOCK SECTION ···· 5-11
5-1-8. LS CHASSIS BLOCK SECTION ····· 5-12
5-1-9. MECHANISM CHASSIS BLOCK SECTION ····· 5-13
5-2. ELECTRICAL PARTS LIST ····· 5-14

6. ADJUSTMENTS

6-1. CAMERA SECTION ADJUSTMENT ····· 6-1
1-1. PREPARATIONS BEFORE ADJUSTMENT ····· 6-1
1-1-1. List of service tools ····· 6-1
1-1-2. Precautions ····· 6-2
1. Switch settings ····· 6-2
2. Adjustment sequence ····· 6-2
3. Subject ····· 6-2
1-1-3. Preparations ····· 6-3
1-1-4. Adjustment remote commander (RM-95 upgraded) ····· 6-4
1. Using the adjustment remote commander ····· 6-4
2. Precautions when using the adjustment remote commander ····· 6-5
1-1-5. Page F Address List ····· 6-6
1-2. CAMERA SYSTEM ADJUSTMENTS ····· 6-8
1. Adjustment points when major parts have been replaced ····· 6-8
2. Power supply voltage check (VC-188 board) ····· 6-8
3. Preparation for adjustment ····· 6-8
4. Initialization of page F data ····· 6-9
5. Page F data modification ····· 6-10
6. 28MHz crystal oscillator adjustment (VC-188 board) ·· 6-12
7. HALL adjustment ····· 6-14
8. Flange back adjustment ····· 6-16
9. Flange back check ····· 6-17
10. Picture frame setting ····· 6-18
11. Color reproduction adjustment ····· 6-19
12. IRIS IN/OUT adjustment ····· 6-20
13. Auto white balance reference data input ····· 6-21
14. MAX gain adjustment ····· 6-22
15. Auto white balance adjustment ····· 6-23
16. White balance check ····· 6-24
17. Velocity sensor sensitivity adjustment (EXCEPT TRV14E) ····· 6-25
18. Electronic viewfinder system adjustments (VF-102 board) ····· 6-26
18-1. Power supply voltage check ····· 6-26
18-2. Horizontal and vertical position ····· 6-26
18-3. BRIGHT adjustment ····· 6-26
18-4. Centering adjustment ····· 6-27
18-5. Focus adjustment ····· 6-27
18-6. Diffraction adjustment ····· 6-27
19. COLOR ELECTRONIC VIEWFINDER SYSTEM ADJUSTMENTS ····· 6-28
19-1. Power supply voltage check (VF-109 board) ····· 6-28
19-2. EVR initial data input ····· 6-29
19-3. PCO adjustment (VF-110 board) ····· 6-29
19-4. BRIGHT adjustment (VF-110 board) ····· 6-30
19-5. CONTRAST adjustment (VF-110 board) ····· 6-30
19-6. Back light Current consumption adjustment (VF-109 board) ····· 6-31
19-7. White balance adjustment ····· 6-31
20. LCD system adjustments ····· 6-32
20-1. EVR initial data input ····· 6-33
20-2. VCO adjustment ····· 6-34
20-3. BRIGHT adjustment ····· 6-35
20-4. CONTRAST adjustment ····· 6-36
20-5. D RANGE adjustment (Type 2, 3 MODEL) ····· 6-37
21-6. V-COM level adjustment (Type 2, 3 MODEL) ····· 6-38
20-7. COLOR adjustment ····· 6-39
20-8. HUE adjustment (NTSC MODEL) ····· 6-40
20-9. BURST CLEANING adjustment (PAL MODEL) ····· 6-40
20-10. V. COM adjustment (Type 1, 4 MODEL) ····· 6-41
20-11. White balance adjustment ····· 6-4
6-2. MECHANISM SECTION ADJUSTMENTS ····· 6-47
3-1. HOW TO OPERATE THE MECHANISM AFTER THE CASSETTE COMPARTMENT IS REMOVED ····· 6-47
1. How to load a cassette tape: ····· 6-47
2. How to establish RECORD mode: ····· 6-47
3. How to eject a cassette tape: ····· 6-47
4. Processing after operation ····· 6-4
2-2. TAPE PATH ADJUSTMENT ····· 6-48
1. Preparations for adjustments ····· 6-48
6-3. VIDEO SECTION ADJUSTMENT ····· 6-49
3-1. PREPARATIONS BEFORE ADJUSTMENT ····· 6-50
3-1-1. Equipment required ····· 6
3-1-2. Precautions on adjustment ····· 6-5
3-1-3. Adjustment connector (VC-188 Board CN102) ····· 6-50
3-1-4. Equipment connection ····· 6-
3-1-5. Alignment tape ····· 6-
3-1-6. Output level and impedance ····· 6-52
3-2. ADJUSTMENT POINTS WHEN MAJOR PARTS ARE REPLACED ····· 6-
1. When drum is replaced: ····· 6-
3-3. POWER SUPPLY SYSTEM ADJUSTMENT ····· 6-53
1. Power supply voltage check (VC-188 board) ····· 6-53
2. VTR & CAM mode ON ····· 6-5
3. EMG code (Emergency code) ····· 6-55
4. MSW code ····· 6-
5. Bit value discrimination ····· 6-5
6. Initializing the emergency code area ····· 6-57
7. LED check ····· 6-
8. Key input check (CF-45/46 Board IC 402 ㉗, ㉘, S415, S/S MODE SW) ····· 6-
9. Key input check ····· 6-
10. Key input check (A/D port) ····· 6-5
11. Individual operation of drum, capstan and loading motor ····· 6-5
12. Drum use history check ····· 6-
3-4. SYSTEM CONTROL SYSTEM ADJUSTMENTS ····· 6-60
3-8. Battery down voltage adjustment ····· 6-60
3-9. Battery down voltage check ····· 6-60
3-10. SERVO SYSTEM ADJUSTMENTS ····· 6-61
1. SYNC level and BURST level adjustments ····· 6-61
2. Switching position adjustment ····· 6-62
3. Capstan FG offset adjustment ····· 6-63
4. PLAYBACK FREQUENCY RESPONSE CHARACTERISTICS ADJUSTMENT ····· 6-64
3-7. DEMD OUT LEVEL ADJUSTMENT ····· 6-65
3-8. YD OUT LEVEL ADJUSTMENT ····· 6-66
3-9. PB CHROMA LEVEL CHECK ····· 6-67
3-10. PB Y OUT LEVEL ADJUSTMENT ····· 6-68
3-11. FE OSC CHECK ····· 6-
3-12. EMPHASIS INPUT LEVEL ADJUSTMENT ····· 6-70
3-13. Y FM DEVIATION ADJUSTMENT (NOTE) ····· 6-71
3-14. Y FM CARRIER FREQUENCY ADJUSTMENT ····· 6-72
3-15. CHROMA EMPHASIS fo ADJUSTMENT ····· 6-73
3-16. REC Y LEVEL ADJUSTMENT ····· 6-74
3-17. REC C LEVEL ADJUSTMENT ····· 6-74
6-4. AUDIO SYSTEM ADJUSTMENT ····· 6-76
4-1. EE-OUTPUT LEVEL CHECK ····· 6-76
4-2. 1.5 MHz DEVIATION ADJUSTMENT (STEREO MODEL) ····· 6
4-3. 1.7MHz DEVIATION ADJUSTMENT (STEREO MODEL) ····· 6
4-4. 1.5MHz DEVIATION ADJUSTMENT (MONO MODEL) ····· 6
4-5. BPF fo ADJUSTMENT ····· 6-
4-6. OVERALL SIGNAL LEVEL, DISTORTION AND SEPARATION CHECK ····· 6-8
4-7. OVERALL NOISE LEVEL CHECK ····· 6-80
6-5. INFRARED TRANSMIT CIRCUIT ADJUSTMENT (IR MODEL) ····· 6-
5-1. PREPARATIONS ····· 6-
Equipment connection ····· 6-
Switch setting ····· 6-
5-2. VIDEO CARRIER FREQUENCY ADJUSTMENT ···· 6-82
5-3. VIDEO DEVIATION ADJUSTMENT ····· 6-83
5-4. AUDIO DEVIATION ADJUSTMENT ····· 6-84

* The color reproduction frame is shown after the page of ARRANGEMENT DIAGRAM FOR ADJUSTMENT PARTS.

SERVICE NOTE

NOTE : To eject a cassette from the camcorder without turning on the main power, firstly remove the SCREW (for TRIPOD), then remove the FLEXIBLE BOARD as shown, and finally connect the regulated power supply ; +5V to the loading motor, this is to protect the main circuit from damage.

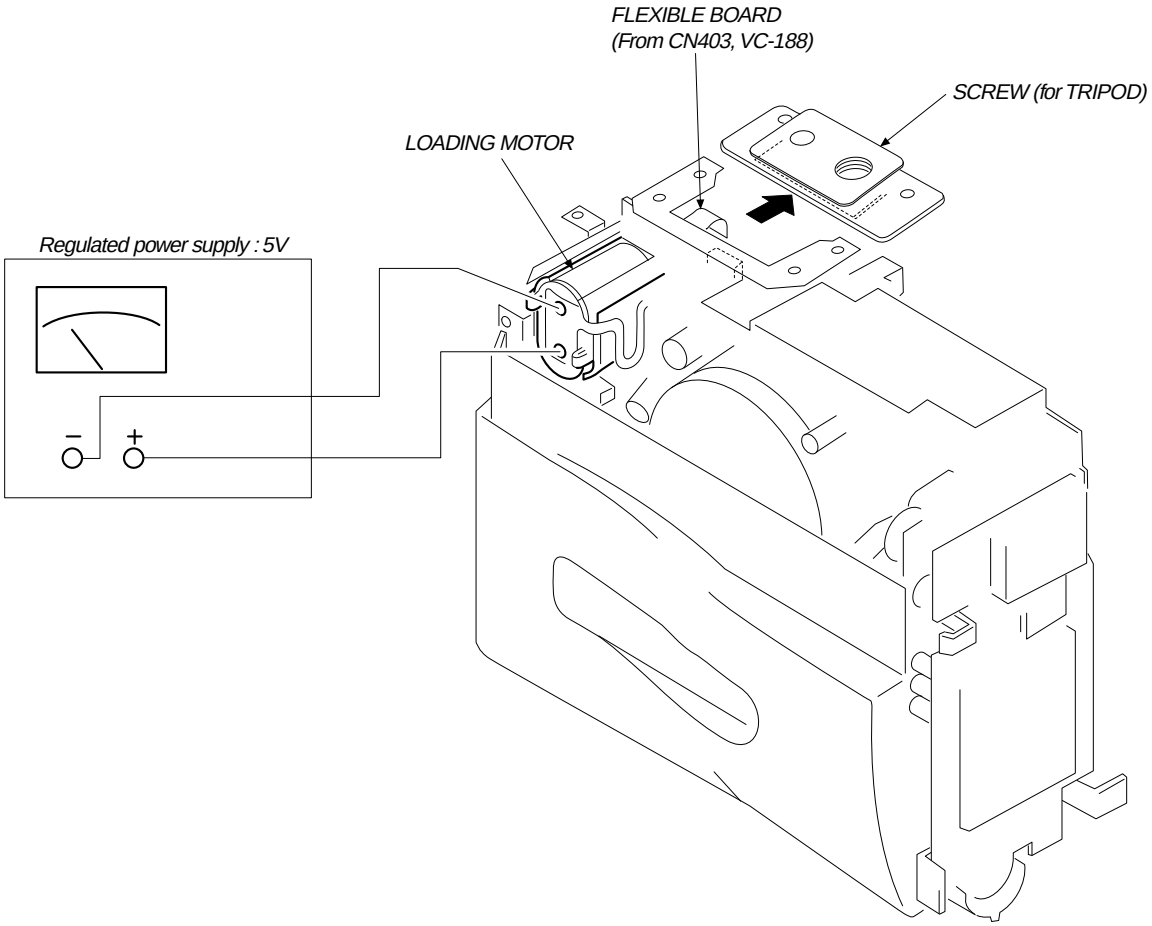

SECTION 1
GENERAL

This section is extracted from instruction manual.(CCD-TRV14E/TRV24E)

Getting started

Charging and installing the battery pack

Подготовка к началу работы

Зарядка и установка батарейного блока

Before using your camcorder, you first need to charge and install the battery pack. To charge the battery pack, use the supplied AC power adaptor.

Charging the battery pack

Charge the battery pack on a flat place without vibration.

(1) Connect the AC power adaptor to the mains.
(2) Align the right side of the battery pack with the line on the AC power adaptor, then slide the battery pack in the direction of the arrow.
(3) Set the selector to CHARGE. The CHARGE lamp (orange) lights up. Charging begins.

When charging is completed, the CHARGE lamp goes out. Unplug the unit from the mains, and then remove the battery pack and install it on the camcorder.

Перед пользованием Вашей видеокамерой Вам следует сначала зарядить и установить батарейный блок. Для зарядки батарейного блока воспользуйтесь прилагаемым сетевым адаптером перем. тока.

Зарядка батарейного блока

Зарядку батарейного блока производите на ровной поверхности, не подверженной вибрации.

(1) Подсоедините сетевой шнур адаптера перем. тока к электрической сети.
(2) Установите правую сторону батарейного блока на одной линии с сетевым адаптером перем. тока, затем передвиньте батарейный блок в направлении стрелки.
(3) Установите селектор в положение CHARGE. Загорится лампочка CHARGE (оранжевая). Начнется зарядка.

Когда зарядка завершится, лампочка CHARGE погаснет. Отключите аппарат от электрической сети, а затем снимите батарейный блок и установите его на видеокамеру.

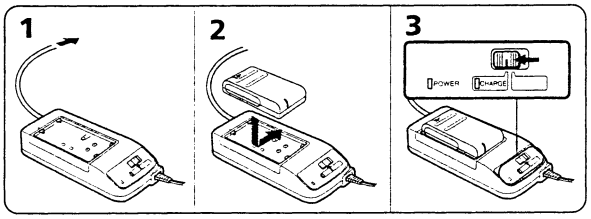

Charging Time (in minutes)

Battery pack	Charging time*
NP-33 (supplied)	60
NP-55H	85
NP-C65/67	105
NP-66	95
NP-77H	170
NP-98	215

* Approximate minutes to charge an empty battery pack using the supplied AC power adaptor (Lower temperatures require a longer charging time.)

Время зарядки (в минутах)

Батарейный блок	Время зарядки*
NP-33 (прилагается)	60
NP-55H	85
NP-C65/67	105
NP-66	95
NP-77H	170
NP-98	215

* Приблизительно в минутах для зарядки разряженного батарейного блока с использованием прилагаемого сетевого адаптера перем. тока. (При низких температурах время зарядки удлиняется.)

Charging and installing the battery pack

Зарядка и установка батарейного блока

Notes on charging the battery pack

- The POWER lamp will remain lit for a while even if the battery pack is removed and the mains lead is unplugged after charging the battery pack. This is normal.
- If the POWER lamp does not light, set the selector to VTR (DC OUT) and disconnect the mains lead. After about one minute, reconnect the mains lead and set the selector to CHARGE again.
- You cannot operate the camcorder using the AC power adaptor while charging the battery pack.

Примечания по зарядке батарейного блока

- Лампочка POWER будет некоторое время светиться, даже если батарейный блок снят и сетевой провод отключен после зарядки батарейного блока. Это является нормальным.
- Если лампочка POWER не загорается, установите селектор в положение VTR (DC OUT) и отсоедините сетевой провод. Примерно через минуту вновь подсоедините сетевой провод и опять установите селектор в положение CHARGE.
- Вы не можете управлять видеокамерой с использованием сетевого адаптера перем. тока во время зарядки батарейного блока.

Installing the battery pack

(1) Insert the top of the battery pack into the top of the battery mounting surface.
(2) Push the battery pack. Make sure that you hear clicks twice.
Attach the battery pack to the camcorder securely.

Установка батарейного блока

(1) Вставьте верхний конец батарейного блока в верхнюю часть батарейной установочной поверхности.
(2) Нажмите на батарейный блок. Убедитесь, чтобы Вы услышали дважды щелчок. Прикрепите надежно батарейный блок к видеокамере.

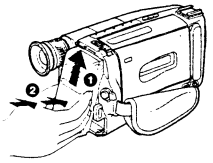

Note on the battery pack
Do not carry the camcorder by grasping the battery pack.

Примечание относительно батарейного блока
Не переносите видеокамеру путем захвата ее за батарейный блок.

To remove the battery pack
Slide BATT, and then pull the lower part of the battery pack.

Для снятия батарейного блока
Сдвиньте BATT, а затем потяните за нижнюю часть батарейного блока.

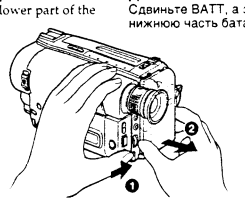

You can look at the demonstration of the functions available with this camcorder. (p. 31)

Вы можете взглянуть на демонстрацию функций, имеющихся для данной видеокамеры. (стр. 31)

Inserting a cassette

Вставка кассеты

Make sure that a power source is installed.

(1) While pressing the small blue button, slide EJECT in the direction of the arrow. The cassette compartment automatically opens.
(2) Insert a cassette (not supplied) with the window facing out.
(3) Press the PUSH mark on the cassette compartment to close it. The cassette compartment automatically closes.

Убедитесь, что источник питания установлен.

(1) Нажимая маленькую синюю кнопку, сдвиньте EJECT в направлении стрелки. Отсек кассеты автоматически открывается.
(2) Вставьте кассету (не прилагается) окошком, обращенным наружу.
(3) Нажмите метку PUSH на отсеке кассеты для его закрытия. Отсек кассеты автоматически закрывается.

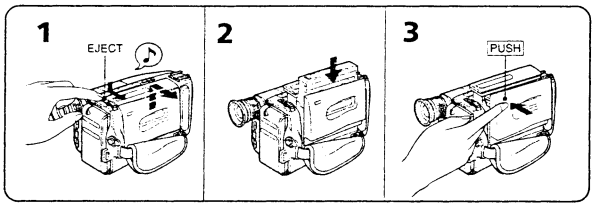

To eject the cassette
While pressing the small blue button, slide EJECT in the direction of the arrow.

To prevent accidental erasure
Slide the tab on the cassette to expose the red mark.
If you insert the cassette with the red mark exposed and close the cassette compartment, the beeps sound for a while. If you try to record with the red mark exposed, the ☞ and ⏏ indicators flash, and you cannot record.
To re-record on this tape, slide the tab back out covering the red mark.

Для выталкивания кассеты
Нажимая маленькую синюю кнопку, сдвиньте EJECT в направлении стрелки.

Для предотвращения случайного стирания
Передвиньте лепесток на кассете, чтобы появилась красная метка.
Если Вы вставите кассету при выставленной красной метке и закроете отсек кассеты, то зазвучит зуммерный сигнал. Если Вы попытаетесь записывать при выставленной красной метке, будут мигать индикаторы ☞ и ⏏, и Вы не сможете призвести запись.
Для перезаписи на данную ленту передвиньте лепесток назад, чтобы закрыть красную метку.

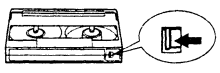

Basic operations

Camera recording

Основные операции

Запись с помощью видеокамеры

Make sure that a power source and a cassette is inserted and that the START/STOP MODE switch inside the LCD panel is set to ⏏.
When you use the camcorder for the first time, power on it and reset the date and time to your time (p. 55) before you start recording. The date is automatically recorded for 10 seconds after you start recording **(AUTO DATE feature)**. This feature works only once a day.
Before you record one-time events, you may want to make a trial recording to make sure that you are using the camcorder correctly.

(1) While pressing the small green button on the POWER switch, set it to CAMERA.
(2) Turn STANDBY up. The "STBY" indicator appears in the viewfinder.
(3) Press START/STOP. The camcorder starts recording and the "STBY" indicator changes to the "REC" indicator.

You can also select Recording mode, SP (standard play) mode or LP (long play) mode. Set REC MODE in the menu system according to the length of your planned recording before you start.

Убедиться, источник питания и кассета вставлены и, что переключатель START/STOP MODE на панели ЖКД установлен на ⏏.
Если Вы используете видеокамеру в первый раз, то включите ее питание и установите дату и время на Ваше время (стр. 55) перед тем, как Вы начнете запись. Дата автоматически будет записываться в течение 10 секунд после начала записи **(функция AUTO DATE)**. Эта функция работает только один раз в день.
Перед тем, как Вы начнете запись одноразовых событий, Вы можете захотеть сделать пробу для подтверждения, что Вы используете видеокамеру правильно.

(1) Нажимая маленькую зеленую кнопку на выключателе POWER, установите его в положение CAMERA.
(2) Поверните STANDBY вверх. Индикатор "STBY" появится в видоискателе.
(3) Нажмите START/STOP. Видеокамера начинает запись, и индикатор "STBY" изменится на индикатор "REC".

Вы также можете выбрать режим записи, режим SP (стандартное воспроизведение) или режим LP (удлиненное воспроизведение). Установите REC MODE в системе меню в соответствии с длительностью планируемой Вами записи перед началом.

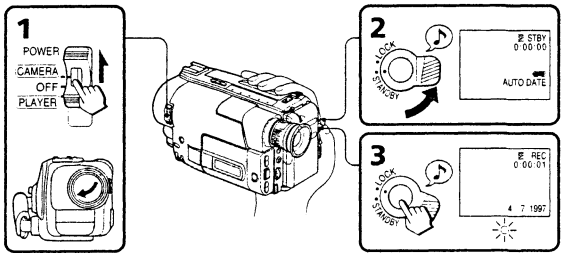

To stop recording momentarily [a]

Press START/STOP again. The "REC" indicator in the viewfinder changes to the "STBY" indicator (**Standby mode**).

To finish recording [b]

Press START/STOP. Turn STANDBY down, and set the POWER switch to OFF.
Then, eject the cassette and remove the battery pack.

[a]

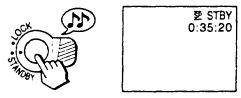

[b]

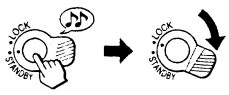

Note on standby mode

If you leave the camcorder for 5 minutes or more with a cassette inserted in Standby mode, the camcorder goes off automatically. This prevents wearing down the battery and wearing out the tape. To resume Standby mode, turn STANDBY down once and turn it up again. To start recording, press START/STOP.

Notes on the recording mode

- This camcorder records and plays back in SP (standard play) mode and in LP (long play) mode.
  The playback quality in LP mode, however, will not be as good as that in SP mode.
- When a tape recorded on this camcorder in LP mode is played back on other types of 8 mm camcorders or VCRs, the playback quality may not be as good as that on this camcorder.

Note on recording

When you record from the beginning of the tape, run the tape for about 15 seconds before actual recording. This prevents the camcorder from missing any start-up scenes when you play back the tape.

Для временной остановки записи [a]

Нажмите опять START/STOP. В видоискателе индикатор "REC" изменится на индикатор "STBY" (**режим готовности**).

Для окончания записи [b]

Нажмите START/STOP. Поверните STANDBY вниз и установите выключатель POWER в положение OFF. Затем вытолкните кассету и удалите батарейный блок.

Примечание к режиму готовности

Если Вы оставляете видеокамеру на 5 минут или более со вставленной кассетой в режиме готовности, то видеокамера выключится автоматически. Это предотвращает разрядку батареи и износ ленты. Для возобновления режима готовности один раз поверните STANDBY вниз и снова поверните его вверх. Для начала записи нажмите START/STOP.

Примечания к режимам записи

- Данная видеокамера записывает и воспроизводит в режиме SP (стандартного воспроизведения) или в режиме LP (удлиненного воспроизведения). Однако, качество воспроизведения в режиме LP будет не таким хорошим, как в режиме SP.
- Если лента была записана в режиме LP на данной видеокамере и воспроизводится на других типах 8-мм видеокамер или на KBM, качество воспроизведения может быть не таким хорошим, как при воспроизведении на данной видеокамере.

Примечание к процессу записи

Если Вы производите запись с самого начала ленты, дайте возможность ленте переместиться около 15 секунд до начала записи. Это предохраняет видеокамеру от пропуска начальных сюжетов съемки, когда Вы будете воспроизводить ленту.

To focus the viewfinder lens

If the viewfinder is not in focus at all or when you use the camcorder after someone else has used it, focus the viewfinder lens. Turn the viewfinder lens adjustment ring so that the indicators in the viewfinder come into sharp focus.

Для фокусировки объектива видоискателя

Если видоискатель вообще не сфокусирован, или, если Вы используете видеокамеру после того, как ее использовал кто-то другой, то сфокусируйте объектив видоискателя. Поверните регулировочное кольцо объектива видоискателя так, чтобы индикаторы в видоискателе были четко сфокусированы.

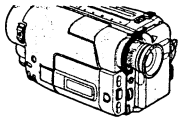

Notes on the tape counter

- The tape counter indicates the recording or playback time. Use it as a guide. There will be a time lag of several seconds from the actual time. To set the counter to zero, press COUNTER RESET inside the LCD panel.
- If the tape is recorded in SP and LP modes mixed, the tape counter shows incorrect recording time. When you intend to edit the tape using the tape counter as a guide, record in same (SP or LP) mode.

Note on beep sound

As indicated with ♪ in the illustrations, a beep sounds when you turn the power on or when you start recording and two beeps sound when you stop recording, confirming the operation. Several beeps also sound as a warning of any unusual condition of the camcorder. Note that the beep sound is not recorded on the tape. If you do not want to hear the beep sound, set BEEP to OFF in the menu system.

Примечания к счетчику ленты

- Счетчик ленты указывает время записи или время воспризведения. Используйте его в качестве руководства. Существует отставание по времени на несколько секунд от фактического времени. Для установки показаний счетчика к нулевой отметке нажмите кнопку COUNTER RESET на панели ЖКД.
- Если лента записана в сочетании режимов SP и LP, счетчик ленты будет показывать неправильное время записи. Если Вы намереваетесь произвести монтаж ленты с использованием счетчика времени согласно руководству, выполняйте запись в одном и том же режиме (SP или LP).

Примечание к зуммерному звуковому сигналу

Как указано с помощью ♪ на рисунках, зуммерный сигнал звучит, когда Вы начинаете запись, и два зуммерных сигнала звучат, когда Вы заканчиваете запись, подтверждая тем самым работу. Несколько зуммерных сигналов также звучит в качестве предупреждения какого-либо ненормального состояния видеокамеры. Заметьте, что зуммерный звуковой сигнал не записывается на ленту. Если Вы не хотите слышать зуммерный сигнал, установите BEEP в системе меню в положение OFF.

Note on the AUTO DATE feature

The clock is set at the factory to Sydney time for Australia and New Zealand models, to Tokyo time for the models sold in Japan and to Hong Kong time for other models. You can reset the clock in the menu system.
The AUTO DATE feature shows the date automatically once a day. However, the date may automatically appear more than once a day when:
- you reset the date and time.
- you eject and insert the cassette again.
- you stop recording within 10 seconds.

Примечание к функции AUTO DATE

Часы установлены на заводе на время Лондона для Соединенного Королевства и на время Парижа для других европейских стран в системе меню.
Вы можете переустановить часы. Функция AUTO DATE работает один раз в день. Однако, дата может появиться более одного раза в день, если:
- Вы переустановите дату и время.
- Вы вытолкнете ленту и вставите кассету снова.
- Вы остановите запись в пределах 10 секунд.

Using the zoom feature

Zooming is a recording technique that lets you change the size of the subject in the scene. For more professional-looking recordings, use the zoom sparingly.
T side: for telephoto (subject appears closer)
W side: for wide-angle (subject appears farther away)

Использование функции наезда видеокамеры

Наезд видеокамеры является техническим приемом записи, который позволяет Вам изменять размер объекта в кадре. Не злоупотребляйте этим приемом, если хотите, чтобы Ваши записи выглядели более профессионально.
Сторона "T": для телефото (объект приближается)
Сторона "W": для широкого угла съемки (объект удаляется)

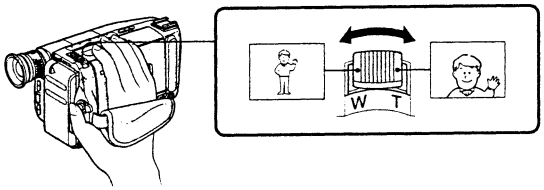

Zooming speed (Variable speed zooming)

Turn the power zoom lever fully for a high-speed zoom. Turn it lightly for a relatively slow zoom.

When you shoot a subject using a telephoto zoom

If you cannot get a sharp focus while in extreme telephoto zoom, move the power zoom lever to the "W" side until the focus is sharp.
You can shoot a subject that is at least 80 cm (about 2.6 feet) away from the lens surface in the telephoto position, or 1 cm (about 1/2 inches) in the wide-angle position.

Notes on digital zoom (CCD-TRV24E only)

- More than 15x zoom is performed digitally, and the picture quality deteriorates as you go toward the " T " side. If you do not want to use the digital zoom, set D ZOOM to OFF in the menu system.
- The right side **[a]** of the power zoom indicator shows the digital zooming zone, and the left side **[b]** shows the optical zooming zone. If you set D ZOOM to OFF, the right **[a]** zone disappears.

Скорость наезда видеокамеры (наезд с разной скоростью)

Полностью поверните рычаг приводного трансфокатора для быстрого наезда видеокамеры. Поверните его слегка для медленного наезда телекамеры.

Когда Вы снимаете объект, используя наезд в режиме телефото

Если Вы не можете получить четкой фокусировки во время крайнего наезда в режиме телефото, то перемещайте рычаг приводного трансфокатора в сторону "W" до тех пор, пока не получите четкой фокусировки.
Вы можете произвести съемку предмета, который по меньшей мере находится на расстоянии 80 см от поверхности объектива в положении телефото или 1 см в положении широкого угла.

Примечания к цифровому трансфокатору (только CCD-TRV24E)

- Более, чем 15-кратная трансфокация *выполняется цифровым способом*, и качество изображения ухудшается по мере перемещения в сторону "T". Если Вы не хотите использовать цифровую трансфокацию, установите D ZOOM в системе меню в положение OFF.
- Правая сторона **[a]** индикатора приводной трансфокации показывает зону цифровой трансфокации, а левая сторона **[b]** показывает зону оптической трансфокации. Если Вы установите D ZOOM в положение OFF, правая зона **[a]** исчезнет.

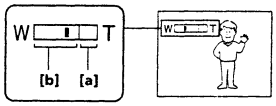

Camera recording

Запись с помощью видеокамеры

Shooting with the LCD screen

You can also record the picture while looking at the LCD screen.
When using the LCD screen, the viewfinder turns off automatically. You cannot monitor the sound from the speaker during recording.
(1) While pressing PUSH OPEN, open the LCD panel.
(2) Adjust the angle of the LCD panel.
The LCD panel moves about 90 degrees to this side and about 210 degrees to the other side.
To adjust the brightness of the LCD screen, press BRIGHT + or –.
The battery life is longer when the LCD panel is closed. Use the viewfinder instead of the LCD screen to save the battery power.

Съемка с помощью экрана ЖКД

Вы также можете осуществлять запись изображения, просматривая его на экране ЖКД.
При использовании экрана ЖКД видоискатель выключится автоматически. Вы не можете прослушивать звук от громкоговорителя во время записи.
(1) Нажимая PUSH OPEN, откройте панель ЖКД.
(2) Отрегулируйте угол панели ЖКД.
Панель ЖКД перемещается приблизительно на 90 градусов в одну сторону и на 210 градусов в другую сторону.
Для того, чтобы отрегулировать яркость экрана ЖКД, нажмите кнопку BRIGHT + или –.
Срок службы батареи будет длинее, если ЖКД панель закрыта. Используйте видоискатель вместо экрана ЖКД для экономии мощности батареи.

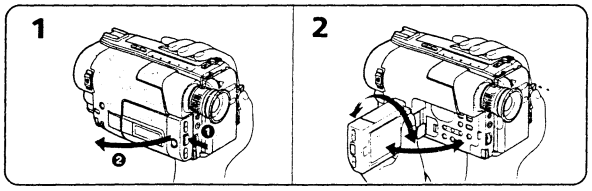

Notes on the LCD panel
- When closing the LCD panel, turn it vertically until it clicks **[a]**.
- When turning the LCD panel, turn it always vertically; otherwise, the camcorder body may be damaged or the LCD panel may not close properly **[b]**.
- Close the LCD panel completely when not in use.

Примечания к панели ЖКД
- При закрывании панели ЖКД поворачивайте ее вертикально, пока она не зашелкнется **[a]**.
- При поворачивании панели ЖКД поворачивайте ее всегда вертикально, или в противном случае корпус видеокамеры может быть поврежден, или панель ЖКД не сможет закрыться правильно **[b]**.
- Полностью закройте панель ЖКД, когда она не используется.

[a]

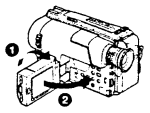

[b]

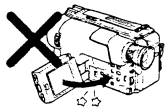

Letting the subject monitor the shot

Возможность для снимаемого человека наблюдать съемку

You can turn the LCD panel over so that it faces the other way and you can let the subject monitor the shot while shooting with the viewfinder.

Turn the LCD panel vertically first until it clicks, then turn it over. The ⊖ indicator appears **(Mirror mode)** and the date and tape counter indicators disappear.

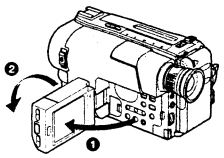

To cancel mirror mode

Turn the LCD panel back toward the viewfinder.

Notes on mirror mode
- When you turn the LCD panel about 135 degrees to 210 degrees, the camcorder enters mirror mode.
- Using the mirror mode, you can record yourself while watching yourself on the LCD **[a]**.
- The picture on the LCD looks as a mirror-image while recording in mirror mode **[b]**. The STBY indicator appears as ❚❚● and REC as ●. Some indicators may not appear in mirror mode.
- The date appears in reverse when the AUTO DATE feature is turned on. When recorded it will be normal.
- While recording in mirror mode, you cannot operate the following buttons: TITLE, DATE and TIME.
- The counter is displayed upside down in the display window.

Вы можете перевернуть панель ЖКД, так, что она будет обращена в другую сторону и Вы можете дать возможность снимаемому человеку наблюдать съемку, снимая с помощью видоискателя.

Сперва поворачивайте панель ЖКД вертикально, пока она не зашелкнется, а затем переверните ее. Индикатор ⊖ появится на экране **(зеркальный режим)** , и индикаторы даты и счетчика ленты батареи исчезнут.

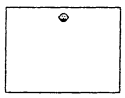

Для отмены зеркального режима

Поверните панель ЖКД назад в направлении видоискателя.

Примечания к зеркальному режиму
- Если Вы повернете панель ЖКД приблизительно до диапазона от 135 градусов до 210 градусов, то видеокамера войдет в зеркальный режим.
- Используя зеркальный режим, Вы можете записывать себя на ленту, просматривая свое изображение на ЖКД **[a]**.
- Изображение на ЖКД выглядит, как зеркальное отображение во время записи в зеркальном режиме **[b]**. Индикатор STBY появляется в виде ❚❚● и REC в виде ●. Некоторые индикаторы могут не появляться в зеркальном режиме.
- Дата появляется в обратном порядке, если включена функция AUTO DATE. После записи она будет нормальной.
- Во время записи в зеркальном режиме Вы не можете управлять следующими кнопками: TITLE, DATE и TIME.
- Счетчик отображается в перевернутом виде в окошке дисплея.

[a]

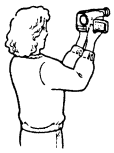

[b]

Hints for better shooting

Советы для лучшей съемки

For hand-held shots, you'll get better results by holding the camcorder according to the following suggestions:
- Hold the camcorder firmly and secure it with the grip strap so that you can easily manipulate the controls with your thumb.

Для кадров при удерживании видеокамеры в руках, Вы получите лучшие результаты, если будете держать видеокамеру в соответствии со следующими указаниями:
- Держите видеокамеру крепко и закрепите ее с помощью ременного захвата так, чтобы Вы могли легко манипулировать регуляторами с помощью большого пальца.

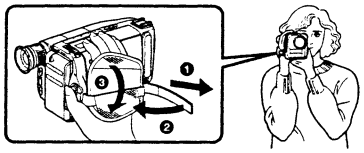

- Place your right elbow against your side.
- Place your left hand under the camcorder to support it.
- Place your eye firmly against the viewfinder eyecup.
- Use the viewfinder frame as a guide to determine the horizontal plane.
- You can record in a low position to get an interesting recording angle. Lift the viewfinder up for recording from a low position **[a]**.
- You can also record in a low position or even in a high position using the LCD panel **[b]**.

- Расположите Ваш правый локоть сбоку от себя.
- Расположите Ваш левую руку под видеокамерой для ее поддержки.
- Надежно прислоните Ваш глаз к окуляру видоискателя.
- Используйте визирную рамку в качестве руководства для определения горизонтального плана.
- Вы можете записывать из низкого положения для получения интересного угла записи. Поднимите видоискатель вверх для записи из низкого положения **[a]**.
- Вы также можете снимать из низкого положения или даже из высокого положения с использованием панели ЖКД **[b]**.

[a]

[b]

Hints for better shooting

Советы для лучшей съемки

Place the camcorder on a flat surface or use a tripod
Try placing the camcorder on a table top or any other flat surface of suitable height. If you have a tripod for a still camera, you can also use it with the camcorder. When attaching a non-Sony tripod, make sure that the length of the tripod screw is less than 6.5 mm (9/32 in). Otherwise, the screw may damage the inner parts of the camcorder.

Cautions on the viewfinder and the LCD
- Do not pick up the camcorder by the viewfinder or by the LCD panel **[c]**.
- Do not place the camcorder so as to point the viewfinder or the LCD screen toward the sun. The inside of the viewfinder or the LCD panel may be damaged. Be careful when placing the camcorder under sunlight or by a window **[d]**.

Располагайте видеокамеру на плоской поверхности или используйте треногу
Старайтесь располагать видеокамеру на столе или любой другой плоской поверхности на подходящей высоте. Если Вы имеете треногу для фотоаппарата, то Вы также можете использовать ее с видеокамерой. При прикреплении треноги не фирмы Sony убедитесь, что длина винта треноги менее 6,5 мм. В противном случае винт может повредить внутренние части видеокамеры.

Предостережения к видоискателю и ЖКД
- Не поднимайте видеокамеру за видоискатель или панель ЖКД **[c]**.
- Не располагайте видеокамеру так, чтобы видоискатель или экран ЖКД были направлены прямо на солнце. Внутренние части видоискателя или панели ЖКД могут быть повреждены. Будьте осторожны при расположение видеокамеры под солнцем или возле окна **[d]**.

[c]

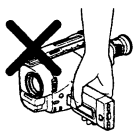

[d]

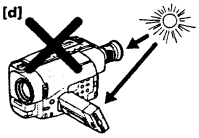

Note on the LCD screen
When you use the LCD screen outdoors in direct sunlight, the LCD screen may be difficult to see. If this happens, we recommend that you use the viewfinder.

Примечание относительно экрана ЖКД
Когда Вы используете экран ЖКД вне помещения под прямыми солнечными лучами, просмотр на экране ЖКД может быть затруднен. В этом случае рекомендуется использовать видоискатель.

Checking the recorded picture

Using EDITSEARCH, you can review the last recorded scene or check the recorded picture in the viewfinder. You can also review the picture on the LCD screen.

(1) While pressing the small green button on the POWER switch, set it to CAMERA.
(2) Turn STANDBY up.
(3) Press the – (⊖) side of EDITSEARCH momentarily; the last few seconds of the recorded portion plays back **(Rec Review)**. You can also monitor the sound from the speaker or by using an earphone (not supplied).
Hold down the – side of EDITSEARCH until the camcorder goes back to the scene you want. The last recorded portion is played back. To go forward, hold down the + side **(EditSearch)**.

Проверка записанного изображения

Используя EDITSEARCH, Вы можете пересмотреть последнюю записанную сцену или проверить записанное изображение в видоискателе. Вы также можете пересмотреть изображение на экране ЖКД.

(1) Нажимая маленькую зеленую кнопку на выключателе POWER, установите его в положение CAMERA.
(2) Поверните STANDBY вверх.
(3) Ненадолго нажмите сторону – (⊖) кнопки EDITSEARCH; последние несколько секунд записанной части будут воспроизведены **(пересмотр записи)**.
Вы также можете прослушивать звук от громкоговорителя или через наушники (не прилагаются).
Держите сторону – кнопки EDITSEARCH до тех пор, пока видеокамера не вернется к желаемой сцене. Последняя записанная часть будет воспроизведена.
Для продвижения вперед держите сторону + **(монтажный поиск)**.

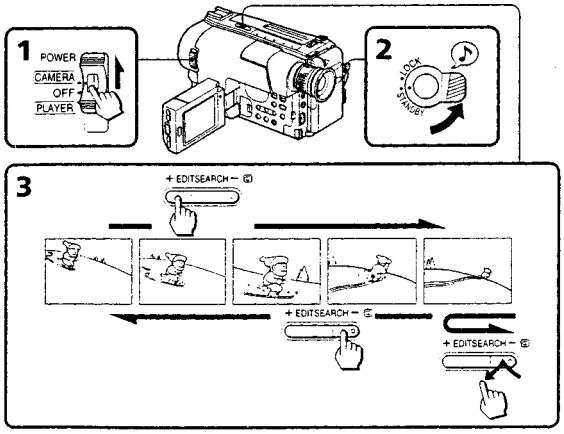

Checking the recorded picture

To stop playback
Release EDITSEARCH.

To go back to the last recorded point after edit search
Press END SEARCH. The last recorded point is played back for about 5 seconds if the tape was recorded in SP mode, or 10 seconds if the tape was recorded in LP mode, and stops.
Note that this function does not work once you eject the cassette after you recorded in the tape.

To begin re-recording
Press START/STOP. Re-recording begins from the last recorded point or the point you released EDITSEARCH. Provided you do not eject the tape, the transition between the last scene you recorded and the next scene you record will be smooth.

Проверка записанного изображения

Для остановки воспроизведения
Нажмите EDITSEARCH.

Для возврата к последнему записанному месту после монтажного поиска
Нажмите END SEARCH. Последнее записанное место будет воспроизводиться приблизительно в течении 5 секунд, если лента была записана в режиме SP, или в течение 10 секунд, если лента была записана в режиме LP, а затем лента остановится. Обратите внимание, что данная функция не работает, если Вы вытолкните кассету после записи ленты.

Для начала перезаписи
Нажмите START/STOP. Перезапись начинается от последней записанной точки или от точки, где Вы отпустили EDITSEARCH. Предусмотрено, чтобы Вы не вытолкнули кассету, и переход между последней сценой, которую Вы записали, и следующей сценой, которую Вы записываете, будет плавным.

Playing back a tape

You can monitor the playback picture on the LCD screen.

(1) While pressing the small green button on the POWER switch, set it to PLAYER.
(2) Insert the recorded tape with the window facing out.
(3) While pressing PUSH OPEN, open the LCD panel. Adjust the angle of the LCD panel or the brightness of the LCD screen if necessary.
(4) Press ▷ to start playback.
(5) Adjust the volume using VOLUME +/–.
You can also monitor on the TV screen after connecting the camcorder to the VCR or TV.

Воспроизведение ленты

Вы можете просматривать воспроизводимое изображение на экране ЖКД.

(1) Нажимая маленькую зеленую кнопку на выключателе POWER, передвиньте его в положение PLAYER.
(2) Вставьте записанную кассету окошком, обращенным наружу.
(3) Нажимая PUSH OPEN, откройте панель ЖКД. Отрегулируйте угол панели ЖКД и яркость экрана ЖКД, если это требуется.
(4) Нажмите ▷ для начала воспроизведения.
(5) Отрегулируйте громкость с использованием VOLUME +/–.
Вы также можете просматривать изображение на экране телевизора после подсоединения видеокамеры к КВМ/телевизору.

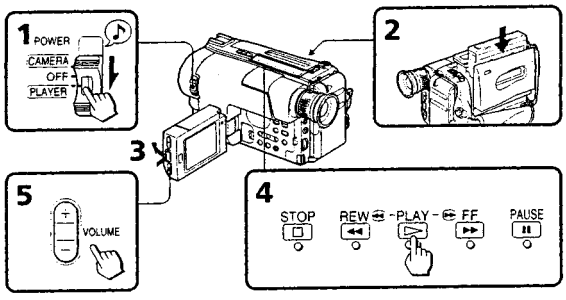

To stop playback, press □.
To rewind the tape, press ◀◀.
To fast-forward the tape, press ▶▶.

Для остановки воспроизведения нажмите □.
Для ускоренной перемотки ленты назад нажмите ◀◀.
Для ускоренной перемотки ленты вперед нажмите ▶▶.

Playing back a tape

When watching on the LCD screen
You can turn the LCD panel over and move back to the camcorder with the LCD screen facing out **[a]**. You can adjust the angle of the LCD panel up to 30 degrees **[b]**.

Воспроизведение ленты

При просмотре на экране ЖКД
Вы можете перевернуть панель ЖКД и передвинуть назад к видеокамере с обращенным наружу экраном ЖКД **[a]**. Вы можете изменять угол наклона панели ЖКД на 30 градусов **[b]**.

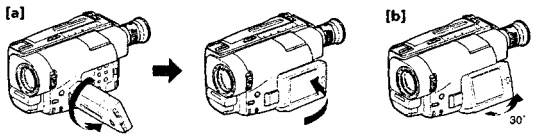

Using the Remote Commander
You can control playback using the supplied Remote Commander.
Before using the Remote Commander, insert the R6 (size AA) batteries.

To erase the screen indicators
Press DISPLAY to erase the screen indicators on the LCD screen. To display the indicators, press again.
The indicators don't appear on the TV.

Using an earphone
Connect an earphone (not supplied) to the 🎧 jack. You can adjust the volume of the earphone using VOLUME.

To view the playback picture in the viewfinder
Close the LCD panel. The viewfinder turns on automatically. When using the viewfinder, you can monitor the sound only by using an earphone.
To view on the LCD screen again, open the LCD panel. The viewfinder turns off automatically.

Использование пульта дистанционного управления
Вы можете управлять воспроизведением с использованием прилагаемого пульта дистанционного управления.
Перед использованием пульта дистанционного управления вставьте батарейки R6 (размером AA).

Для удаления индикаторов с экрана
Нажмите кнопку DISPLAY для стирания экранных индикаторов на экране ЖКД. Для отображения индикаторов нажмите ее снова.
Индикаторы не появляются на экране телевизора.

Использование наушников
Подсоедините наушники (не прилагаются) к гнезду 🎧. Вы можете отрегулировать громкость наушников с использованием VOLUME.

Для просмотра воспроизводимого изображения в видоискателе
Закройте панель ЖКД. Видоискатель включится автоматически. При использовании видоискателя Вы можете прослушивать звук только через наушники.
Для просмотра на экране ЖКД снова откройте панель ЖКД. Видоискатель выключится автоматически.

Playing back a tape

Various playback modes

To view a still picture (playback pause)
Press II during playback. To resume playback, press II or ▷.

To locate a scene (Picture Search)
Keep pressing ◀◀ or ▶▶ during playback. To resume normal playback, release the button.

To monitor the high-speed picture while advancing the tape or rewind (Skip Scan)
Keep pressing ◀◀ while rewinding or ▶▶ while advancing the tape.
To resume normal playback, press ▷.

Notes on playback
- Streaks appear and the sound is muted in the various playback modes.
- When playback pause mode lasts for 5 minutes or more, the camcorder automatically enters stop mode.

Воспроизведение ленты

Различные режимы воспроизведения

Для просмотра неподвижного избражения (пауза воспроизведения)
Нажмите кнопку II во время воспроизведения. Для возобновления воспроизведения нажмите кнопку II или ▷.

Для отыскания желаемого фрагмента (поиск изображения)
Держать нажатой кнопку ◀◀ или ▶▶ во время воспроизведения. Для возобновления нормальнго воспроизведения отпустить кнопку.

Для контроля изображения на высокой скорости во время ускоренной перемотки вперед или назад (поиск методом прогона)
Держать нажатой кнопку ◀◀ во время перемотки ленты назад или кнопку ▶▶ во время перемотки ленты вперед. Для возобновления нормального воспроизведения нажать кнопку ▷.

Примечания к воспроизведении
- В различных режимах воспроизведения на экране могут появиться полосы и звук будет приглушен.
- Если режим паузы воспроизведения продолжается 5 минут или более, видеокамера автоматически войдет в режим остановки.

Searching for the end of the picture

You can go to the end of the recorded portion after you record and play back the tape to make the transition between the last scene you recorded and the next scene smooth. The tape starts rewinding or fast-forwarding. Then, the last 5 seconds play back if the tape was recorded in SP mode, or the last 10 seconds play back if the tape was recorded in LP mode. Then the tape stops at the end of the recorded picture **(End Search)**.
Note that End Search function does not work once you eject the cassette after you recorded in the tape.
(1) While pressing PUSH OPEN, open the LCD panel.
(2) Press END SEARCH.
This function works when the POWER switch is set to either CAMERA or PLAYER.

Поиск конца изображения

Вы можете перейти к концу записанной части после записи и воспроизведения ленты для обеспечения плавного перехода между последней сценой, которую Вы записали, и следующей сценой. Лента начинает ускоренно перематываться назад или вперед. Затем последние 5 секунд будут воспроизведены, если лента записана в режиме SP, или последние 10 секунд будут воспроизведены, если лента записана в режиме LP. Затем лента останавливается в конце записанного изображения **(поиск конца)**.
Обратите внимание, что функция поиска конца не работает, если Вы вытолкнули кассету после выполнения Вашей записи на ленте.
(1) Нажимая PUSH OPEN, откройте панель ЖКД.
(2) Нажмите END SEARCH.
Данная функция работает, когда выключатель POWER установлен в любую из позиций, CAMERA или PLAYER.

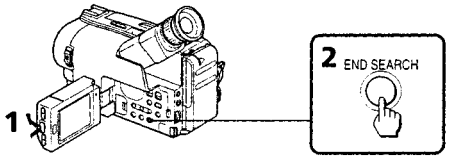

Advanced operations

Using alternative power sources

You can choose any of the following power sources for your camcorder: battery pack, the mains, and 12/24 V car battery. Choose the appropriate power source depending on where you want to use your camcorder.

Place	Power source	Accessory to be used
Indoors	Mains	Supplied AC power adaptor
Outdoor	Battery pack	Battery pack (Ni-Cd type)
In the car	12 V or 24 V car battery	Sony DC pack DCP-77

Note on power sources
Disconnecting the power source or removing the battery pack during recording or playback may damage the inserted tape. If this happens, restore the power supply again immediately.

This mark indicates that this product is a genuine accessory for Sony video product. When purchasing Sony video products, Sony recommends that you purchase accessories with this "GENUINE VIDEO ACCESSORIES" mark.

Усовершенствованные операции

Использование альтернативных источников питания

Вы можете выбирать любой из следующих источников питания для Вашей видеокамеры: батарейный блок, сетевое питание и автомобильный аккумулятор 12/24 В. Выбирайте надлежащий источник питания в зависимости от того, где Вы хотите использовать Вашу видеокамеру.

Место	Источник питания	Используемые принадлежности
В помещении	Электрическая сеть	Прилагаемый сетевой адаптер перем. тока
Вне помещения	Батарейный блок	Батарейный блок (типа Ni-Cd)
В автомобиле	Автомобильный аккумулятор 12 В или 24 В	Блок пост. тока DCP-77 Sony

Примечание к источникам питания
Отсоединение источников питания или снятие батарейного блока во время записи или воспроизведения может повредить вставленную ленту. Если такое случится, восстановите источник питания немедленно.

Настоящий знак указывает, что данная продукция является подлинной принадлежностью видеопродукции Sony. Если Вы покупаете видеопродукцию Sony, то мы рекомендуем, чтобы Вы покупали принадлежности со знаком "GENUINE VIDEO ACCESSORIES."

Using alternative power sources

Using the mains

To use the supplied AC power adaptor:
(1) Connect the mains to a wall outlet. Insert the top of the connecting plate of the AC power adaptor into the top of the battery mounting surface. Push the connecting plate so that it attaches firmly. Make sure that you hear clicks twice.
(2) Set the selector to VTR (DC OUT).

Использование альтернативных источников питания

Использование электрической сети

Для использования прилагаемого сетевого адаптера перем. тока:
(1) Подсоедините сетевой провод к сетевой розетке. Вставьте верхний конец соединительной пластины сетевого адаптера перем. тока в верхнюю часть батарейной установочной поверхности. Нажмите на соединительную пластину, так, чтобы она присоединилась надежно. Убедитесь, чтобы Вы услышали щелчок дважды.
(2) Установите селектор в положение VTR (DC OUT).

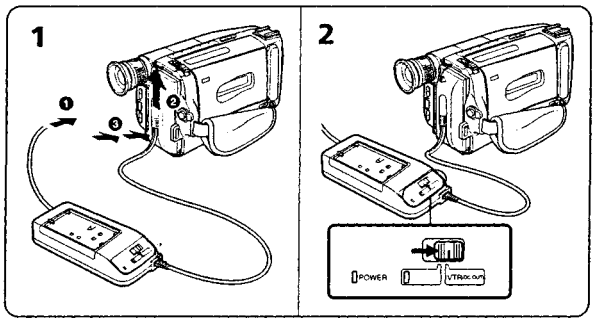

WARNING
The mains lead must only be changed at qualified service shop.

PRECAUTIONS
The set is not disconnected from the AC power source (mains) as long as it is connected to the mains, even if the set itself has been turned off.

ПРЕДУПРЕЖДЕНИЕ
Сетевой провод следует заменять только в мастерской квалифицированного обслуживания.

ПРЕДОСТЕРЕЖЕНИЕ
Данный аппарат не отключается от источника питания перем. тока, пока он подсоединен к электрической сети, даже если сам аппарат отключен.

Using alternative power sources

Notes on the POWER lamp

- The POWER lamp will remain lit for a while even if the unit is unplugged after use. This is normal.
- If the POWER lamp does not light, set the selector to VTR (DC OUT) and disconnect the mains lead. After about one minute, reconnect the mains lead.

To remove the adaptor

The adaptor is removed in the same way as the battery pack.

Using a car battery

Use Sony DCP-77 DC pack (not supplied). Connect the cord of the DC pack to the cigarette lighter socket of the car (12 V or 24 V). Connect the DC pack to the battery mounting surface of the camcorder.

To remove the DC pack

The DC pack is removed in the same way as the battery pack.

Использование альтернативных источников питания

Примечания к лампочке POWER

- Лампочка POWER будет оставаться горящей какое-то время, даже если аппарат будет отсоединен после использования. Это является нормальным.
- Если лампочка POWER не загорается, установите селектор в положение VTR (DC OUT) и отсоедините сетевой провод. Приблизительно через одну минуту снова подсоедините сетевой провод.

Для снятия адаптера

Адаптер снимается таким же образом, как и батарейный блок.

Использование автомобильного аккумулятора

Используйте блок пост. тока DCP-77 Sony (не прилагается). Подсоедините шнур блока пост. тока к гнезду сигаретного прикуривателя автомобиля (12 В или 24 В). Подсоедините блок пост. тока к установочной поверхности батареи видеокамеры.

Для снятия блока пост. тока

Блок пост. тока снимается таким же способом, как и батарейный блок.

Changing the mode settings

You can change the mode settings to further enjoy the features and functions of the camcorder.

(1) While pressing PUSH OPEN, open the LCD panel.
(2) Press MENU to display the menu.
(3) Turn the control dial to select the desired item, and press the dial.
(4) Turn the control dial to select the desired mode, and press the dial.
(5) Press MENU to erase the menu display.

Изменение режимных установок

Вы можете изменять установки режимов для наслаждения дополнительными свойствами и функциями видеокамеры.

(1) Нажав кнопку PUSH OPEN, откройте панель ЖКД.
(2) Нажмите кнопку MENU для отображения меню.
(3) Поверните регулировочный диск, чтобы выбрать желаемый пункт, и нажмите диск.
(4) Поверните регулировочный диск, чтобы выбрать желаемый режим, и нажмите диск.
(5) Нажмите кнопку MENU, чтобы удалить индикации меню.

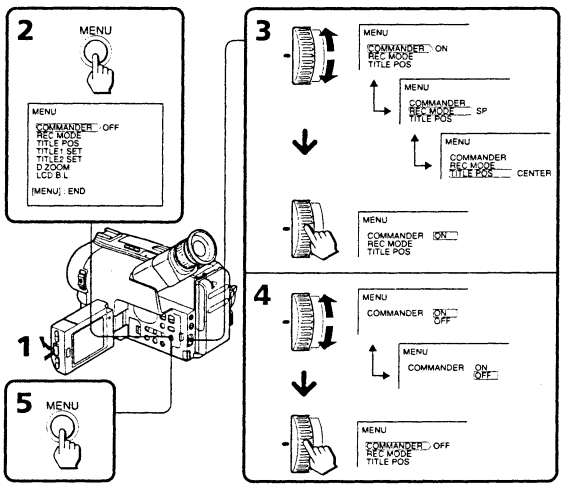

Changing the mode setting

Selecting the mode setting of each item

Items for both CAMERA and PLAYER modes

COMMANDER <ON/OFF>
- Select ON when using the supplied Remote Commander for the camcorder.
- Select OFF when not using the Remote Commander.

BEEP* <ON/OFF>
- Select ON so that beeps sound when you start/stop recording, etc.
- Select OFF when you do not want to hear the beep sound.

LCD B.L. * <BRT NORMAL/BRIGHT>
- If you select BRT NORMAL, the battery life becomes about 10% longer than it is when you select BRIGHT.
- Select BRIGHT to make the LCD screen brighter when shooting/playing back outdoors.

Items for CAMERA mode only

REC MODE* <SP/LP>
- Select SP to record a tape in SP (standard play) mode.
- Select LP to record a tape in LP (long play) mode.

TITLE POS* <CENTER/BOTTOM>
- Select CENTER to center the title in the picture.
- Select BOTTOM to position the title at the bottom of the picture.

TITLE1 SET*/TITLE2 SET*
Store your own titles.

D ZOOM* <ON/OFF> (CCD-TRV24E only)
- Select ON to activate digital zooming.
- Select OFF to not use the digital zoom. The camcorder goes back to 15x zoom.

Изменение режимных установок

Выбор установки режима по каждому пункту

Пункты для режимов CAMERA и PLAYER

ПУЛЬТ УПРАВЛЕНИЯ COMMANDER <ON/OFF>
- Установите в положение ON, если Вы полузуетесь прилагаемым к видеокамере пультом дистанционного управления.
- Установите в положение OFF, если Вы не используете пульт дистанционного управления.

ЗУММЕРНЫЙ СИГНАЛ BEEP* <ON/OFF>
- Установите в положение ON, чтобы зуммерные звуковые сигналы звучали, когда Вы начинаете/заканчиваете запись и т.п.
- Установите в положение OFF, когда Вы не хотите слышать зуммерный звуковой сигнал.

ЖКД LCD B.L.* <BRT NORMAL/BRIGHT>
- Если Вы выберете BRT NORMAL, срок службы батарейки станет на 10% дольше, чем в случае, когда Вы выберете BRIGHT.
- Выберите BRIGHT, чтобы сделать экран ЖКД ярче в случае съемки/воспроизведения вне помещения.

Пункты только для режима CAMERA

РЕЖИМ ЗАПИСИ REC MODE* <SP/LP>
- Выберите SP для записи ленты в режиме SP (стандартное воспроизведение).
- Выберите LP для записи ленты в режиме LP (продолжительное воспроизведение).

НАДПИСЬ TITLE POS* <CENTER/BOTTOM>
- Выберите CENTER для размещения надписи посредине изображения.
- Выберите BOTTOM для размещения надписи внизу изображения.

УСТАНОВКА НАДПИСИ 1 TITLE1 SET*/ УСТАНОВКА НАДПИСИ 2 TITLE2 SET*
Занесите в память Ваши собственные надписи.

ТРАНСФОКАЦИЯ D ZOOM* <ON/OFF> (только модель CCD-TRV24E)
- Выберите ON для включения цифровой трансфокации.
- Выберите OFF для выключения цифровой трансфокации. Видеокамера вернется к 15-кратной трансфокации.

Changing the mode settings

REC LAMP* <ON/OFF>
- Select OFF when you do not want the camera recording/battery lamp at the front of the unit to light up.
- Normally select ON.

AUTO DATE* <ON/OFF>
- Select ON to record the date for 10 seconds after recording has started.
- Select OFF to not record the date.

CLOCK SET*
Reset the date or time.

DEMO MODE* <ON/OFF>
- Select ON to make the demonstration appear.
- Select OFF to make the demonstration not appear.

* These settings are retained even when the battery is removed, as long as the lithium battery is in place.

Notes on DEMO MODE

- DEMO MODE is set to STBY at the factory and the demonstration starts about 10 minutes after you set the POWER switch to CAMERA without inserting a cassette.
  Note that you cannot select STBY of DEMO MODE in the menu system.
- You cannot select DEMO MODE when a cassette is inserted in the camcorder.
- If you insert a cassette during the demonstration, the demonstration stops. You can start recording as usual. DEMO MODE automatically returns to STBY.

To look at the demonstration at once
Eject the cassette, if inserted. Select ON of DEMO MODE. Erase the menu display. The demonstration will begin.
When you turn off the camcorder once, DEMO MODE automatically returns to STBY.

Изменение режимных установок

ЛАМПОЧКА ДЛЯ ЗАПИСИ REC LAMP* <ON/OFF>
- Выберите OFF, если Вы не хотите, чтобы высвечивалась лампочка записи/батареи видеокамеры с передней стороны аппарата.
- Обычно выбирается ON.

АВТОМАТИЧЕСКАЯ ДАТА AUTO DATE* <ON/OFF>
- Выберите ON для записи даты в течение 10 секунд после начала записи.
- Выберите OFF, чтобы не записывать дату.

УСТАНОВКА ЧАСОВ CLOCK SET*
Установите заново дату или время.

ДЕМОНСТРАЦИОННЫЙ РЕЖИМ DEMO MODE* <ON/OFF>
- Выберите ON, чтобы появлялась демонстрация.
- Выберите OFF, чтобы не появлялась демонстрация.

* Эти установки сохраняются даже после снятия батарейного блока, если литиевая батарейка будет оставаться на месте.

Примечания относительно демонстрационного режима DEMO MODE

- На заводе-изготовителе DEMO MODE установлен в положение STBY, и демонстрация начнется примерно через 10 минут после установки выключателя POWER в положение CAMERA без установки кассеты.
  Обратите внимание, что Вы не можете выбрать установку STBY демонстрационного режима DEMO MODE в системе меню.
- Вы не можете выбрать демонстрационный режим DEMO MODE, если в видеокамеру вставлена кассета.
- Если Вы вставили кассету во время демонстрации, то демонстрация будет остановлена. Вы можете начать запись как обычно. Демонстрационный режим DEMO MODE автоматически вернется в STBY.

Для немедленного просмотра демонстрации
Выньте кассету, если она вставлена.
Выберите ON демонстрационного режима DEMO MODE. Удалите индикации меню.
Начнется демонстрация.
Если Вы выключите видеокамеру, режим DEMO MODE автоматически вернется в положение STBY.

Recording with the date or time

Before you start recording or during recording, press DATE or TIME inside the LCD panel. You can record the date or time displayed on the LCD screen or in the viewfinder with the picture. You cannot record the date and time at the same time. Except for the date or time indicator, no indicator is recorded.
The clock is set at the factory to Sydney time for Australia and New Zealand models, to Tokyo time for the models sold in Japan and to Hong Kong time for other models. You can reset the clock in the menu system.

Запись с датой или временем

Перед тем, как начать запись или во время записи нажмите кнопку DATE или TIME под панелью ЖКД. Вы можете записать дату или время, отображаемые на экране ЖКД или в видоискателе, вместе с изображением. Вы не можете записывать дату и время одновременно. Кроме индикатора даты или времени, никакой другой индикатор записываться не будет.
Часы установлены на заводе на время Сиднея для австралийской и новозеландской моделей, на время Токио для моделей, продаваемых в Японии и на время Гонконга для остальных моделей. Вы можете выполнить повторную установку часов в системе меню.

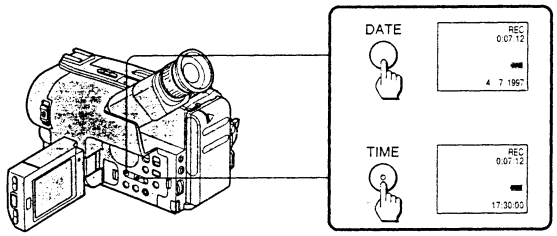

To stop recording with the date or time

Press DATE or TIME again. The date or time indicator disappears. The recording continues.

Note

You cannot superimpose a title during recording the date or time.

Для остановки записи с датой или временем

Нажмите DATE или TIME снова. Индикатор даты или времени исчезнет. Запись продолжится.

Примечание

Вы не можете наложить надпись во время записи даты или времени.

Selecting the START/STOP mode

Выбор режима START/STOP

Your camcorder has two modes besides normal start/stop mode. These modes enable you to take a series of quick shots resulting in a lively video.

(1) While pressing PUSH OPEN, open the LCD panel.
(2) Set START/STOP MODE to the desired mode.
: Recording starts when you press START/STOP, and stops when you press it again (normal mode).
(ANTI GROUND SHOOTING): The camcorder records only while you press down START/STOP so that you can avoid recording unnecessary scenes.
5SEC : When you press START/STOP, the camcorder records for 5 seconds and then stops automatically.
(3) Turn STANDBY up and press START/STOP. Recording starts.

If you selected **5SEC**, five dots appear in the viewfinder. The dots disappear at a rate of one per second as illustrated below.

Кроме обычного режима пуска/остановки в видеокамере имеются два других режима. Эти режимы позволяют Вам выполнить серию съемок и создать оживленный видеосюжет.

(1) Нажимая PUSH OPEN, откройте панель ЖКД.
(2) Установите START/STOP MODE на желаемый режим.
: Запись начинается, когда Вы нажимаете кнопку START/STOP и останавливается, когда Вы нажимаете ее снова (обычный режим).
(ANTI GROUND SHOOTING): Видеокамера производит запись только, когда Вы держите START/STOP в нажатом состоянии, что позволяет Вам избежать записи ненужных сцен.
5SEC: При нажатии START/STOP видеокамера производит запись в течение 5 секунд, а затем останавливается автоматически.
(3) Поверните STANDBY вверх и нажмите START/STOP.

Если Вы выбрали позицию **5SEC**, в видоискателе появятся пять точек. Эти точки будут исчезать по одной за секунду, как показано на рисунке.

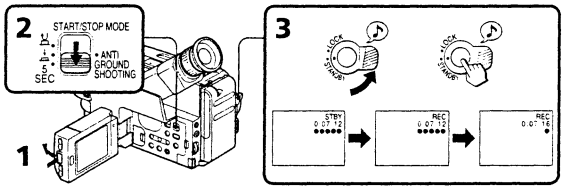

To extend the recording time in 5SEC mode

Press START/STOP again before all the dots disappear. Recording continues for about 5 seconds from the moment you press START/STOP.

Note on 5SEC recording

If you have turned off the indicators on the LCD screen, the dots do not appear.

Для продления времени записи в режиме записи 5SEC

Снова нажмите START/STOP перед тем, как все точки исчезнут. Запись продолжится еще около 5 секунд от момента нажания START/STOP.

Примечание к записи в режиме 5SEC

Если Вы выключите индикаторы на экране ЖКД, точки появляться не будут.

Fade-in and fade-out

Введение и выведение изображения

You can fade in or out to give your recording a professional appearance.
When fading in, the picture gradually fades in from black while the sound increases.
When fading out, the picture gradually fades to black while the sound decreases.

When fading in [a]

(1) While the camcorder is in Standby mode, press FADER. The FADER indicator starts flashing.
(2) Press START/STOP to start recording. The FADER indicator stops flashing.

When fading out [b]

(1) During recording, press FADER. The FADER indicator starts flashing.
(2) Press START/STOP to stop recording. The FADER indicator stops flashing, and then recording stops.

Вы можете вводить или выводить изображение, что придаст Вашей записи профессиональный вид.
При введении изображение постепенно появляется из черного экрана, а звук усиливается.
При выведении изображение постепенно исчезает и переходит в ченый экран, а звук затихает.

При введении изображения [a]

(1) В то время, когда видеокамера находится в режиме готовности, нажмите кнопку FADER. Индикатор FADER начнет мигать.
(2) Нажмите кнопку START/STOP для начала записи. Индикатор FADER прекратит мигать.

При выведении изображения [b]

(1) Нажмите во время записи кнопку FADER. Индикатор FADER начнет мигать.
(2) Нажмите кнопку START/STOP для остановки записи. Индикатор FADER прекратит мигать, после чего начнется запись.

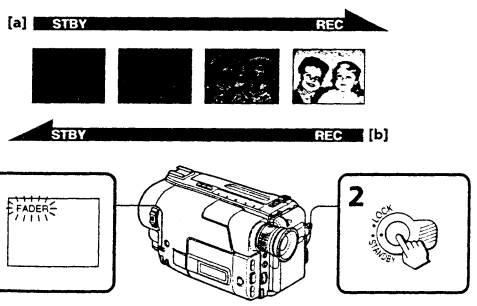

Fade-in and fade-out
Введение и выведение изображения

To cancel the fade-in/fade-out function

Before pressing START/STOP, press FADER to turn off the FADER indicator.

When the date/time or title is displayed

The date/time or title does not fade in or fade out.

When the START/STOP MODE switch is set to or 5SEC

You cannot use the fade-in/fade-out function.

Для отмены функции введения/выведения изображения

Перед тем, как нажать кнопку START/STOP, нажмите кнопку FADER, чтобы выключить индикатор FADER.

В случае отображения на дисплее даты/времени

Дата/время или надпись не вводятся и не выводятся на изображении.

Если переключатель START/STOP MODE установлен в положение или 5SEC

Вы не можете использовать функцию введения/выведения изображения.

Advanced operations
Усовершенствованные операции

Enjoying picture effect

Использование эффектов изображения

Selecting picture effect

You can make pictures like those of television with the Picture Effect function.

С помощью функции эффекта

Вы можете создавать изображения как на телевидении.

[a]

[b]

[c]

MOSAIC [a]
The picture is mosaic.

SOLARIZE [b]
The light intensity is more clear, and the picture looks like a painting.

B&W
The picture is monochrome (black and white).

SEPIA
The picture is sepia.

NEG. ART [c]
The colour of the picture is reversed.

МОЗАИКА [a]
Изображение представляется в виде мозаики.

СОЛЯРИЗАЦИЯ [b]
Усиливается яркость света и изображение выглядит подобно художественной картине.

ЧЕРНО-БЕЛОЕ ИЗОБРАЖЕНИЕ
Изображение становится монохроматическим (черно-белым).

СЕПИЯ
Изображение преобразуется в цвет сепии.

НЕГАТИВНОЕ ИСКУССТВО [c]
Изображение представляетя в негативном цвете.

Using picture effect function

(1) While pressing PUSH OPEN, open the LCD panel.
(2) While the camcorder is in Standby mode, press PICTURE EFFECT to select the desired Picture Effect mode.

Как пользоваться функцией эффектов изображения

(1) Держа нажатой кнопку PUSH OPEN, откройте панель ЖКД.
(2) В то время, как видеокамера находится в режиме готовности, нажмите кнопку PICTURE EFFECT для выбора желаемого режима эффектов изображения.

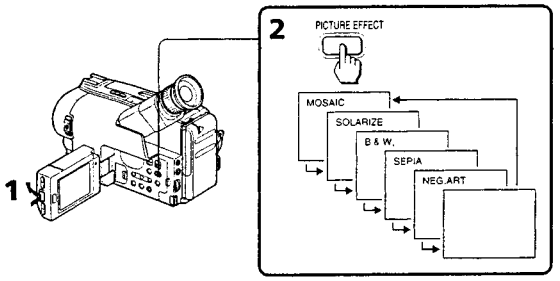

Returning to normal mode
Press PICTURE EFFECT until the Picture Effect indicator disappears.

Note on the picture effect
When you turn the power off, the camcorder returns automatically to normal mode.

Возврат к нормальному режиму
Нажимайте кнопку PICTURE EFFECT до тех пор, пока индикатор эффектов изображения не исчезнет.

Примечание относительно эффектов изображения
Если Вы выключите питание, видеокамера автоматиески вернется к нормальному режиму.

Using the wide mode function

Использование функции широкоформатного режима

– CCD-TRV24E only

– Только CCD-TRV24E

Selecting the desired mode

You can record a cinemalike picture (CINEMA) or a 16:9 wide picture to watch on the 16:9 wide-screen TV (16:9FULL).

Выбор желаемого режима

Вы можете записывать изображение подобно кинофильмам (CINEMA) или широкоформатное изображение формата 16:9 для просмотра на широкоэкранном телевизоре с размером кинескопа 16:9 (16:9FULL).

CINEMA

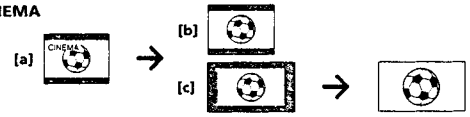

16:9FULL

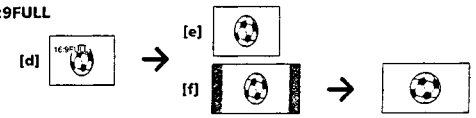

CINEMA
Black bands appear at the top and the bottom of the screen. The viewfinder or the LCD screen **[a]** and a normal TV screen **[b]** look wide. You can also watch the picture without black bands on a wide-screen TV **[c]**.

16:9FULL
The picture in the viewfinder or on the LCD screen **[d]** or on a normal TV **[e]** is horizontally compressed. You can watch the picture of normal images on a wide-screen TV **[f]**.

CINEMA (РЕЖИМ КИНО)
Вверху и внизу экрана появятся черные полосы. Видоискатель или экран ЖКД **[a]** и нормальный телевизионный экран **[b]** будут иметь широкоформатный вид. Вы также можете наблюдать изображение без черных полос на широкоформатном телевизоре **[c]**.

16:9FULL (ШИРОКОФОРМАТНЫЙ РЕЖИМ 16:9)
Изображение в видоискателе или на экране ЖКД **[d]**, а также на экране нормального телевизора **[e]** будет сжато по горизонтали. Вы также можете наблюдать изображение в нормальном виде на широкоэкранном телевизоре **[f]**.

Using the wide mode function

(1) While pressing PUSH OPEN, open the LCD panel.
(2) While the camcorder is in Standby mode, press WIDE repeatedly so that the desired mode indicator appears.

Использование функции широкоформатного режима

(1) Держа нажатой кнопку PUSH OPEN, откройте панель ЖКД.
(2) В то время, как видеокамера находится в режиме готовности, нажимайте повторно кнопку WIDE, так, чтобы появился индикатор желаемого режима.

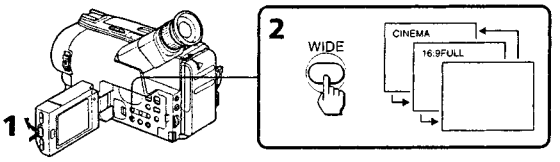

To cancel wide mode
Press WIDE repeatedly until the wide mode indicator disappears.

To watch the tape recorded in wide mode
To watch the tape recorded in CINEMA mode, set the screen mode of the wide-screen TV to zoom mode. To watch the tape recorded in 16:9FULL mode, set it to full mode. For details, refer to the instruction manual of your TV. Note that the picture recorded in 16:9FULL mode looks compressed on a normal TV.

Notes on wide mode
- You cannot cancel the wide mode during recording.
- If wide mode is set to 16:9FULL, the SteadyShot function does not work and the ✋ indicator flashes.
- When you record in 16:9FULL mode, the date or time indicator will be widened on the wide-screen TV.
- If you dub a tape, the tape is copied in the same mode as the original recording.
- The wide mode is cancelled automatically 5 minutes after you remove the power source.

Для отмены широкоформатного режима
Нажимайте повторно кнопку WIDE, пока индикатор широкоформатного режима не исчезнет.

Для просмотра записи ленты в широкоформатном режиме
Для просмотра записи в режиме CINEMA установите экранный режим широкоэкранного телевизора в режим масштабирования. Для просмотра записи ленты в режиме16:9FULL установите телевизор в полноформатный режим. Что касается подробностей, обратитесь к руководству по эксплуатации Вашего телевизора. Помните, что изображение, записанное в режиме 16:9FULL, на нормальном телевизоре будет сжатым.

Примечания относительно широкоформатного режима
- Во время записи Вы не можете отменить широкоформатный режим.
- Если широкоформатный режим установлен в положение16:9FULL, функция стабилизации изображения SteadyShot не будет работать, а индикатор ✋ будет мигать.
- При выполнении записи в режиме16:9FULL индикация даты или времени будет расширенной на широкоэкранном телевизоре.
- В случае выполнения дублирования лента будет копироваться в том же режиме, что и оригинальная запись.
- Через 5 минут после отсоединения источника питания широкоэкранный режим будет аннулирован автоматически.

Focusing manually

When to use manual focus

In the following cases you should obtain better results by adjusting the focus manually.

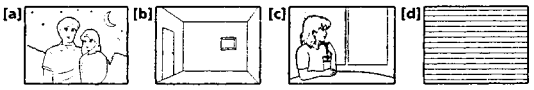

- Insufficient light **[a]**
- Subjects with little contrast — walls, sky, etc. **[b]**
- Too much brightness behind the subject **[c]**
- Horizontal stripes **[d]**
- Subjects through frosted glass
- Subjects beyond nets, etc.
- Bright subject or subject reflecting light
- Shooting a stationary subject when using a tripod

Фокусировка вручную

Когда следует использовать ручную фокусировку

В следующих случаях Вы можете получить лучшие результаты, выполняя регулировку вручную.

- Недостаточное освещение **[a]**
- Объекты с низкой контрастностью – стены, небо и т. п. **[b]**
- Слишком яркий фон за объектом для съемки **[c]**
- Горизонтальные полосы **[d]**
- Объекты, наблюдаемые через матовое стекло
- Объекты, находящиеся за сеткой и т.п.
- Яркий объект или предмет, отражающий свет
- Съемка неподвижного объекта с использованием треноги

Focusing manually

When focusing manually, first focus in telephoto before recording, and then reset the shot length.

(1) Set FOCUS to MANUAL. The indicator appears.

(2) Turn the focus dial to focus on the subject.
Turn to the NEAR side to focus on a nearer object.
Turn to the FAR side to focus on a farther object.

Фокусировка вручную

При фокусировке вручную сначала выполните фокусировку в положении телефото перд записью, а потом выполните повторную установку обектива для съемки.

(1) Установите FOCUS в положение MANUAL. Появится индикатор .

(2) Поверните фокусирующий диск для фокусировки на объект.
Поверните его в сторону NEAR для фокусировки на более близкий объект.
Поверните его в сторону FAR для фокусировки на более дальний объект.

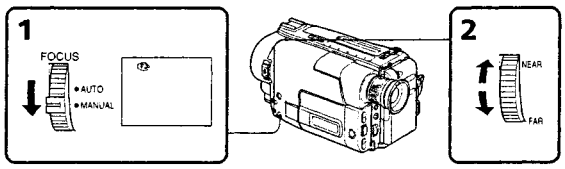

To return to the autofocus mode

Set FOCUS to AUTO. The indicator goes out.

Shooting in relatively dark places

Shoot at wide-angle after focusing in the telephoto position.

Для возвращения в режим автоматической фокусировки

Установите FOCUS в положение AUTO. Индикатор исчезнет.

Съемка в относительно темных местах

Выполняйте съемку в широкоугольном аспекте после того, как выполните фокусировку в положении телефото.

Using the PROGRAM AE function

You can select from three PROGRAM AE (Auto Exposure) modes to suit your shooting situation. When you use PROGRAM AE, you can capture high-speed action or night views.

Selecting the best mode

Select the best mode by using the following examples.

Sports mode

- Outdoor sports scenes such as football, tennis, golf or skiing
- A landscape in a moving car

High-speed shutter mode

- A golf swing or a tennis match in fine weather with the ball captured clearly
- Playing back certain scenes with high-speed movements in clear, sharp picture

Twilight mode

- Recording night views, neon signs or fireworks

Использование функции PROGRAM AE

Вы можете выбрать один из трех режимов PROGRAM AE (автоматической съемки) в соответствии с Вашей ситуацией. Если Вы используете PROGRAM AE, Вы можете запечатлеть высокоскоростное действие или ночные виды.

Выбор наилучшего режима

Выберите наилучший режим, используя следующие примеры.

Режим спорта

- Спортивные сцены вне помещения, например, футбол, теннис, гольф или лыжи
- Ландшафт из движущегося автомобиля

Режим высокоскоростного затвора

- Взмахи во время игры в гольф или теннис в хорошую погоду с четким запечатлением мяча
- Воспроизведение определенных сцен с высокоскоростными движениями с четким, резким изображением

Режим сумерек

- Запись ночных видов, неоновых реклам или фейерверков

Using the PROGRAM AE function

While the camcorder is in Standby mode, press PROGRAM AE until the desired PROGRAM AE indicator appears.

Использование функции PROGRAM AE

В то время, когда видеокамера находится в режиме готовности, нажимайте кнопку PROGRAM AE, пока не появится желаемый индикатор PROGRAM AE.

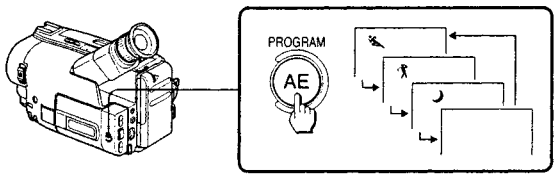

Returning to automatic mode

Press PROGRAM AE until the PROGRAM AE indicator disappears.

Note on shutter speed

The shutter speed in each PROGRAM AE mode is as follows:
Sports mode – between 1/50 to 1/500
High-speed shutter mode – 1/4000
Twilight mode – 1/50
AUTO mode – 1/50 (or 1/100 when the Steady Shot is on – CCD-TRV24E only)

Возвращение к автоматическому режиму

Нажимайте кнопку PROGRAM AE, пока индикатор PROGRAM AE не исчезнет.

Примечание к скорости затвора

Скорость затвора в каждом режиме PROGRAM AE является следующей:
Спортивный режим – между 1/50 и 1/500
Режим высокоскоростного затвора – 1/4000
Режим сумерек – 1/50
Режим AUTO – 1/50 (или 1/100, если включена функция устойчивой съемки – только CCD-TRV24E).

Shooting with backlighting

When you shoot a subject with the light source behind the subject or a subject with a light background, use the BACK LIGHT function.

Press BACK LIGHT. The ◙ indicator appears in the viewfinder or on the LCD screen.

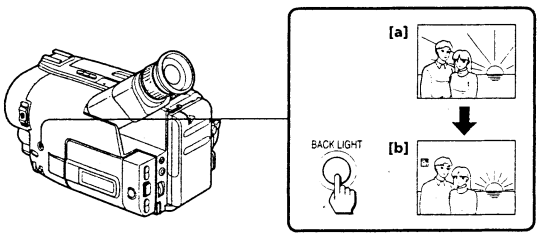

[a] Subject is too dark because of backlight.
[b] Subject becomes bright with backlight compensation.

After shooting

Be sure to release this adjustment condition by pressing BACK LIGHT again. The ◙ indicator disappears. Otherwise, the picture will be too bright under normal lighting condition.

This function is also effective under following conditions:

- On snow e.g. at the ski resort
- At the beach under strong sunshine
- A subject with a light source nearby or a mirror reflecting light
- A white subject against a white background. Especially when you shoot a person wearing shiny clothes made of silk or synthetic fiber, his or her face tends to become dark if you do not use this function.

Съемка с задней подсветкой

Если Вы снимаете объект с источником света позади объекта или объект на светлом фоне, используйте функциию BACK LIGHT.

Нажмите BACK LIGHT. В видоискателе или на экране ЖКД появится индикатор ◙.

[a] Объект является слишком темным из-за задней подсветки.
[b] Объект становится ярким с компенсацией задней подсветки.

После съемки

Обязательно отменить состояние такой регулировки путем нажатия BACK LIGHT снова. Индикатор ◙ исчезнет. В противном случае изображение будет слишком ярким при нормальных условиях освещения.

Эта функция также эффективна при следующих условиях:

- На фоне снега, например, на лыжном курорте
- На пляже сильном присолнечном свете
- Объект находится рядом с источником света или рядом с зеркалом, отражающим свет
- Белый объект на белом фоне. Особенно, если Вы снимаете человека, который одет в яркую одежду, сделанную из шелка или синтетического волокна, его или её лицо будет становиться темным, если Вы не будете использовать эту функцию.

Releasing the STEADY SHOT function

– CCD-TRV24E only

When you shoot, the "((" indicator appears. This indicates that the SteadyShot function is working and the camcorder compensates for camera-shake.

You can release the SteadyShot function when you do not need to use the SteadyShot function. Do not use the SteadyShot function when shooting a stationary object with a tripod.

(1) While pressing PUSH OPEN, open the LCD panel.
(2) Set STEADY SHOT to OFF. The "((" indicator goes off.

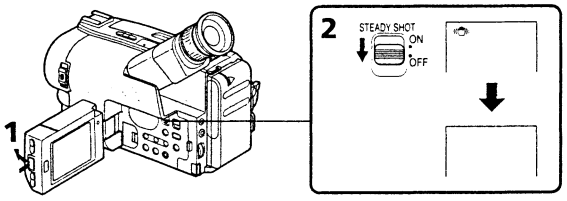

To activate the SteadyShot function again

Set STEADY SHOT to ON.

Notes on the SteadyShot

- The SteadyShot will not correct excessive camera-shake.
- When you switch the SteadyShot function on or off, the exposure may fluctuate.
- When you record in 16:9FULL mode, the SteadyShot function does not work and the "((" indicator flashes.

Включение фукции STEADY SHOT

– Только CCD-TRV24E

При выполнении съемки появится индикатор "((". Это означает, что включена функция SteadyShot и аппарат компенсирует подрагивание видеокамеры.

Вы можете отменить функцию SteadyShot, если нет нужды использовать функцию компенсации подрагивания видеокамеры. Не следует использовать функцию SteadyShot при съемке неподвижных объектов с помощью треноги.

(1) Нажав кнопку PUSH OPEN, откройте панель ЖКД.
(2) Установите STEADY SHOT в положение OFF. Индикатор "((" исчезнет.

Для того, чтобы задействовать функцию SteadyShot снова.

Установите STEADY SHOT в положение ON.

Примечания относительно функции SteadyShot

- Функция SteadyShot не является эффективной для чрезмерного подрагивания видеокамеры.
- При включении или выключении функции SteadyShot возможно подрагивание кадра.
- При выполнении записив режиме 16:9FULL функция SteadyShot не работает, а индикатор "((" будет мигать.

Superimposing a title

You can select from eight preset titles and two titles you made to superimpose it on the picture during recording. Each time you press TITLE, the preset titles appear one by one.

To superimpose from the beginning

(1) Set the POWER switch to CAMERA.
(2) Turn STANDBY up.
(3) While pressing PUSH OPEN, open the LCD panel.
(4) Press TITLE repeatedly until the desired title appears. The title flashes.
(5) Press START/STOP to start recording.
(6) Press TITLE when you want to turn off the title.

To superimpose on the way of recording

(1) Press TITLE repeatedly until the desired title appears. The title flashes.
(2) When the title stops flashing, press TITLE. The title disappears.
(3) Press START/STOP to start recording.
(4) Press TITLE when you want superimpose the title.
(5) Press TITLE when you want to turn off the title.

Наложение надписи

Вы можете выбрать одну из восьми предварительно установленных надписей и две надписи, созданные Вами, которые можно накладывать на изображение во время записи. Всякий раз при нажатии кнопки TITLE предварительно установленные названия появляются одно за другим.

Для наложения от начала

(1) Установите выключаталь POWER в положение CAMERA.
(2) Поверните STANDBY вверх.
(3) Нажимая PUSH OPEN, откойте панель ЖКД.
(4) Неоднократно нажимайте TITLE, пока не появится желаемая надпись. Надпись будет мигать.
(5) Нажимте START/STOP для начала записи.
(6) Нажмите TITLE, когда Вы захотите выключить надпись.

Для наложения в процессе записи

(1) Неоднократно нажимайте TITLE, пока не появится желаемая надпись. Надпись будет мигать.
(2) Когда надпись перестанет мигать, нажмите TITLE. Надпись исчезнет.
(3) Нажмите START/STOP для начала записи.
(4) Нажмите TITLE, когда Вы пожелаете наложить надпись.
(5) Нажмите TITLE, когда Вы захотите выключить надпись.

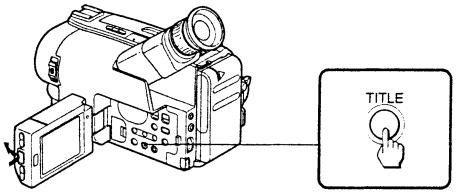

Superimposing a title

Titles cycle as follows
Original title 1 → Original title 2 → HELLO! → HAPPY BIRTHDAY → HAPPY HOLIDAYS → CONGRATULATIONS! → OUR SWEET BABY → WEDDING → VACATION → THE END
When you press TITLE with "THE END" displayed, the titles disappear. When you press TITLE once again, the titles begin from "HELLO!" or your original title.

If you have not stored any original titles
The titles begin from "HELLO!".

Notes on titles

- You cannot select a title during recording.
- You cannot record a title and the date at the same time.
- You cannot record a title and the time at the same time.
- While the menu is displayed, the titles are not recorded.

To select the title position

(1) Press MENU to display the menu on the LCD screen.
(2) Turn the control dial to select TITLE POS, then press the dial.
(3) Turn the control dial to select CENTER **[a]** or BOTTOM **[b]**, then press the dial.
(4) Press MENU to erase the menu display.

Наложение надписи

Надписи циклически изменяются следующим образом
Оригинальная надпись 1 → Оригинальная надпись 2 → HELLO! → HAPPY BIRTHDAY → HAPPY HOLIDAYS → CONGRATULATIONS! → OUR SWEET BABY → WEDDING → VACATION → THE END
Если Вы нажмете кнопку TITLEво время отображения индикации "THE END", надписи исчезнут. Если Вы нажмете кнопку TITLE еще раз, надписи начнут отображаться опять, начиная с "HELLO!" или Вашей оригинальной надписи.

Если Вы не сохранили в памяти оригинальных надписей
Надписи начнут отображаться с"HELLO!".

Примечания относительно надписей

- Вы можете выбрать надпись во время записи.
- Вы не можете записывать надпись и дату одновременно.
- Вы не можете записывать надпись и время одновременно.
- Во время отображения меню надписи не записываются.

Для выбора положения надписи

(1) Нажмите кнопку MENU для отображения меню на экране ЖКД.
(2) Поверните диск управления для выбора TITLE POS, затем нажмите диск.
(3) Поверните диск управления для выбора CENTER **[a]** или BOTTOM **[b]**, затем нажмите диск.
(4) Нажмите кнопку MENU для удаления индикации меню.

[a]

[b]

Making your own titles

Создание Ваших собственных надписей

You can make two titles of up to 22 characters each, and store them in memory.
We recommend to eject the cassette before you begin so that the power is not turned off on the way.

(1) While pressing PUSH OPEN, open the LCD panel.
(2) While the camcorder is in Standby mode, press MENU to display the menu.
(3) Turn the control dial to select TITLE1 SET or TITLE2 SET, then press the dial.
(4) Turn the control dial to select the desired character, then press the dial.
(5) Repeat step 4 until you finish the title.
(6) Turn the dial to select ↵, then press the dial. The title is stored in memory.
(7) Press MENU to erase the menu display.

Вы можете создать две надписи в 22 знака каждая и занести их в память.
Мы рекомендуем вытолкнуть кассету перед тем, как создавать надписи, чтобы питание не выключалось в процессе работы.

(1) Нажав кнопку PUSH OPEN, откройте панель ЖКД.
(2) В то время, когда видеокамера находится в режиме готовности, нажмите кнопку MENU для отображения меню.
(3) Поверните диск управления для выбора TITLE1 SET или TITLE2 SET, затем нажмите диск.
(4) Поверните диск управления для выбора желаемого знака, затем нажмите диск.
(5) Повторяйте пункт 4 до тех пор, пока Вы не завершите надпись.
(6) Поверните диск для выбора ↵, затем нажмите диск. Надпись будет занесена в память.
(7) Нажмите кнопку MENU, чтобы удалить индикацию меню.

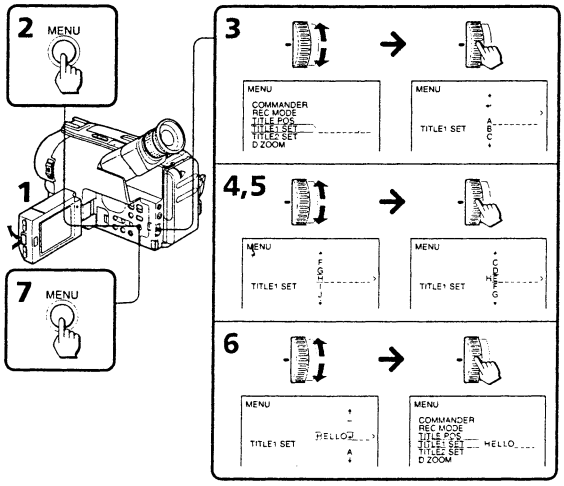

To erase the title you have made

Press MENU, select the title you want to erase, and press the dial. Select ↵ at the leftmost character, then press the dial.
Do not select the blank to erase a character. Otherwise, the blank is stored as a title in memory.

To change the title you have made

In step 3, select TITLE1 SET or TITLE2 SET, depending on which title you want to change, then press the dial. Select the desired characters again.

If you enter 22 characters in step 5

The title is stored immediately (and you can skip step 6).

If it takes more than 5 minutes to make a title with a cassette inserted

If the Standby mode lasts for more than 5 minutes with a cassette inserted, the power is turned off automatically.
If the power is turned off while you are making a title, set the POWER switch to OFF once, then to CAMERA. The title you have made remains stored in memory.

Advancing the characters rapidly

Keep pressing the dial.

Making a blank

Select a blank. It is counted as a character.

Создание Ваших собственных надписей

Для удаления созданной Вами надписи Нажмите кнопку MENU, выберите надпись, которую хотите удалить, и нажмите диск. Выберите ↵ для самого левого знака, затем нажмите диск.
Не выбирайте пустое место для удаления знака. В противном случае пустое место будет занесено в память как надпись.

Для изменения созданной Вами надписи

В пункте 3 выберите TITLE1 SET или TITLE2 SET в зависимости от того, какую надпись Вы хотите изменить, затем нажмите диск. Выберите желаемые буквы снова.

Если Вы ввели 22 знака в пункте 5

Надпись будет занесена в память тотчас же (и Вы можете пропустить пункт 6).

Если при вставленной кассете создание надписи занимает более 5 минут

Если режим готовности прподолжается более 5 минут при вставленной кассете, питание автоматически выключится.
Если питание выключится во время создания надписи, установите переключатель POWER сначала в положение OFF, затем в положение CAMERA. Созданная Вами надпись будет сохранена в памяти.

Быстрое продвижение знаков

Держите диск нажатым.

Создания пустого места

Выберите пустое место. Оно рассматривается как знак.

Watching on a TV screen

Просмотр на экране телевизора

Connect the camcorder to your VCR or TV to watch the playback picture on the TV screen. When monitoring the playback picture by connecting the camcorder to your TV, we recommend you to use mains for the power source.

While playing back on a TV screen, close the LCD panel. Otherwise, picture distortion may occur.

If your TV is already connected to a VCR

Open the jack cover and connect the camcorder to the LINE IN inputs on the VCR by using the supplied A/V connecting cable. Set the input selector on the VCR to LINE. Set the TV/VCR selector on the TV to VCR.

Подсоедините видеокамеру к Вашему КВМ или телевизору для просмотра воспроизводимого изображения на экране телевизора. При подсоединении видеокамеры к Вашему телевизору мы рекомендуем Вам использовать электрическую сеть в качестве источника питания.

При воспроизведении на экране телевизора закройте панель ЖКД. В противном случае может произойти искажение изображения.

Если Ваш телевизор уже подключен к КВМ

Откройте крышку гнезда и подсоедините видеокамеру к входам LINE IN на КВМ, используя прилагаемый соединительный кабель аудио/видео. Установите входной селектор на КВМ в положение LINE. Установите селектор TV/VCR на телевизоре в положение VCR.

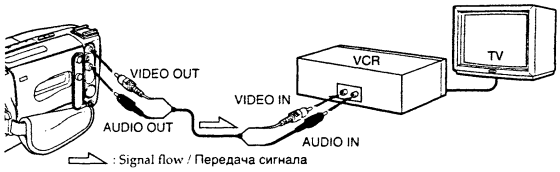

If you connect directly to TV

Connect the camcorder to the inputs on the TV by using the supplied A/V connecting cable. Set the TV/VCR selector on the TV to VCR.

Если Вы подсоединяете прямо к телевизору

Откройте крышку гнезда и подсоедините видеокамеру к входам на телевизоре, используя прилагаемый соединительный кабель аудио/видео. Установите селектор TV/VCR на телевизоре в положение VCR.

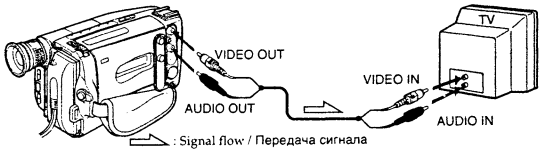

To connect to a VCR or TV without Video/Audio input jacks

Use an RFU adaptor (not supplied).

Для подсоединения к КВМ или телевизору без входных гнезд видео/аудио

Используйте адаптер RFU (не прилагается).

Editing onto another tape

You can create your own video programme by editing with any other 8 mm, Hi8, VHS, S-VHS, VHSC, S-VHSC, or Betamax VCR that has video/audio inputs.

Turn down the volume of the camcorder while editing. Otherwise, picture distortion may occur.

After connecting the camcorder to the VCR,
(1) Set the POWER switch to PLAYER.
(2) Insert a blank tape (or a tape you want to record over) into the VCR and insert your recorded tape into the camcorder.
(3) Play back the recorded tape on the camcorder until you locate the point where you want to start editing, then press II to put the camcorder in playback pause mode.
(4) On the VCR, locate the recording start point and put the VCR in recording pause mode.
(5) Press II on the camcorder and VCR simultaneously to start editing.

Монтаж на другую ленту

Вы можете создать Вашу собственную видеопрограмму путем монтажа с помощью другого КВМ типа 8 мм, Hi8, VHS, S-VHS, VHSC, S-VHSC или Betamax, который имеет входы видео/аудио.

Уменьшите громкость видеокамеры во время монтажа. В противном случае могут появиться искажения.

После подсоединения видеокамеры к КВМ,
(1) Установите выключатель POWER на PLAYER.
(2) Вставьте чистую ленту (или ленту, которую Вы хотите перезаписать) в КВМ и вставьте записанную ленту в видеокамеру.
(3) Воспроизводите записанную ленту в видеокамере до тех пор, пока Вы не обнаружите точку, в которой Вы хотите начать монтаж, а затем нажмите II для введения видеокамеры в режим паузы воспроизведения.
(4) Найдите на КВМ точку начала записи и введите КВМ в режим паузы записи.
(5) Одновременно нажмите II на видеокамере и на КВМ для начала монтажа.

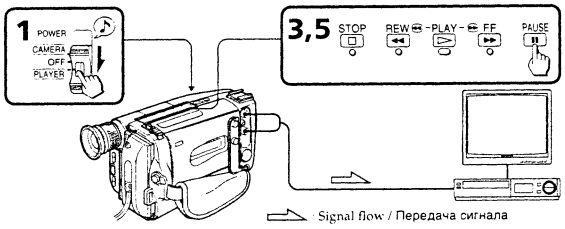

To edit more scenes
Repeat steps 3 to 5.

To stop editing
Press □ on both the camcorder and VCR.

Для монтажа других сцен
Повторяйте пункты с 3 по 5.

Для останова монтажа
Нажмите □ и на видеокамере, и на КВМ.

Additional Information

Changing the lithium battery in the camcorder

Дополнительная информация

Замена литиевой батарейки в видеокамере

Your camcorder is supplied with a lithium battery installed. When the battery becomes weak or dead, the ⚠ indicator flashes in the viewfinder or on the LCD screen for about 5 seconds when you set the POWER switch to CAMERA. In this case, **replace the battery with a Sony CR2025 or Duracell DL-2025 lithium battery. Use of any other battery may present a risk of fire or explosion.** Discard used batteries according to the manufacturer's instructions.
The lithium battery for the camcorder lasts for about one year under normal operation. (The lithium battery that comes installed at the factory may not last one year.)

Ваша видеокамера снабжена установленной литиевой батарейкой. Если батарейка станет слабой или полностью разряженной, индикатор ⚠ будет мигать в видоискателе или на экране ЖКД приблизительно в течение 5 секунд, когда Вы установите выключатель POWER в положение CAMERA. В таком случае **замените батарейку на литиевую батарейку Sony CR2025 или Duracell DL-2025. Использование другой батарейки может привести к риску воспламенения или взрыва.** Ликвидируйте использованные батарейки в соответствии с инструкциями завода-изготовителя.
Литиевая батарейка для видеокамеры работает приблизительно в течение 1 года при нормальных условиях эксплуатации. (Литиевой батарейки, которая была установлена на заводе, может не хватить на 1 год.)

Notes on lithium battery
- **Keep the lithium battery out of the reach of children. Should the battery be swallowed, immediately consult a doctor.**
- Wipe the battery with a dry cloth to assure a good contact.
- Do not hold the battery with metallic tweezers, otherwise a short-circuit may occur.
- The lithium battery has positive (+) side and negative (–) side as illustrated. **Be sure to insert the lithium battery with the positive side facing out.**

Примечания относительно литиевой батарейки
- **Храните литиевую батарейку в месте, не доступном для детей. В случае, если кто-либо проглотил батарейку, немедленно обратитесь к врачу.**
- Для обеспечения хорошего контакта протрите батарейку сухой тканью.
- Не берите батарейку с помощью металлического пинцета, иначе может произойти короткое замыкание.
- Литиевая батарейка имеет положительный полюс (+) и отрицательный полюс (–). **Помните, что что литиевую батарейку следует располагать положительным полюсом наружу.**

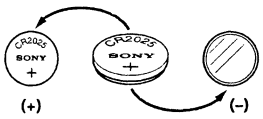

WARNING
The battery may explode if mistreated. Do not recharge, disassemble, or dispose of in fire.

ПРЕДУПРЕЖДЕНИЕ
Если с батарейкой неправильно обращаться, она може взорваться. Не перезаряжать, не разбирать и не бросать батарейку в огонь.

Changing the lithium battery in the camcorder

Замена литиевой батарейки в видеокамере

Changing the lithium battery

When replacing the lithium battery, keep the battery pack or other power source attached. Otherwise, you will need to reset the date and time .
(1) While pressing PUSH OPEN, open the LCD panel.
(2) Open the lid of the lithium battery compartment.
(3) Push the battery in once and pull it out from the holder.
(4) Install the new lithium battery with the positive (+) side facing out.
(5) Close the lid.

Замена литиевой батарейки

При замене литиевой батарейки держите батарейный блок или другой источник питания присоединенным. Иначе Вам придется переустанавливать дату и время.
(1) Нажав кнопку PUSH OPEN, откройте панель ЖКД.
(2) Откройте крышку отсека литиевой батарейки.
(3) Нажмите батарейку один раз и вытащите ее из держателя.
(4) Установите новую литиевую батарейку положительной (+) стороной, обращенной наружу.
(5) Закройте крышку.

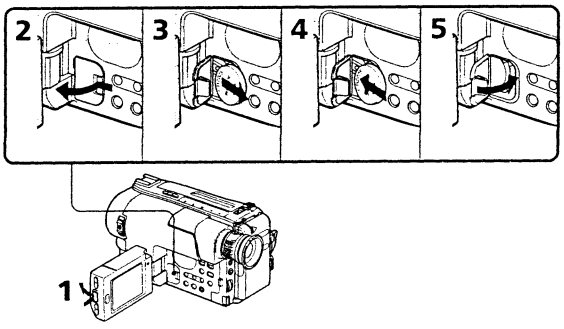

Resetting the date and time

You can reset the date and time in the menu system.
(1) Set the POWER switch to CAMERA.
(2) While pressing PUSH OPEN, open the LCD panel.
(3) Press MENU to display the menu.
(4) Turn the control dial to select CLOCK SET, then press the dial.
(5) Turn the control dial to select the desired year, then press the dial.
(6) Set the month, day, hour, and minutes by turning the control dial and pressing the dial.
(7) Press MENU to erase the menu display.

Установка даты и времени

Вы можете выполнить повторную установку даты и времени в системе меню.
(1) Установите переключатель POWER в положение CAMERA.
(2) Во время нажатия кнопки PUSH OPEN откройте панель ЖКД.
(3) Нажмите кнопку MENU для отображения меню.
(4) Поверните диск управления для выбора CLOCK SET, затем нажмите диск.
(5) Поверните диск управления для выбора желаемого года, затем нажмите диск.
(6) Установите месяц, день, часы и минуты путем поворота диска управления и нажатия диска.
(7) Нажмите кнопку MENU для удаления индикации меню.

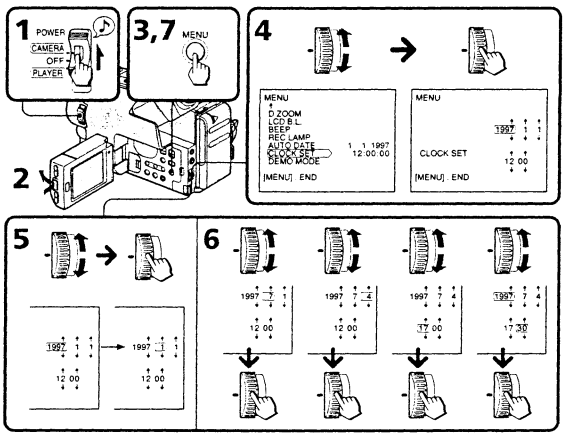

Resetting the date and time / Установка даты и времени

To correct the date and time setting
Repeat steps 5 and 6.

To check the date and time
Press DATE to display the date indicator. Press TIME to display the time indicator. When you press the same button again, the indicator goes out.

The year indicator changes as follows:

1996 → 1997 ··· → 2025

Note on the time indicator
The internal clock of this camcorder operates on a 24-hour cycle.

Для корректировки установки даты и времени
Повторите пункты с 5 по 6.

Для проверки даты и времени
Нажмите DATE для отображения индикатора даты в видоискателе. Нажмите TIME для отображения индикатора времени. Если снова нажмете ту же кнопку, индикатор погаснет.

Индикатор года изменяется следующим образом:

1996 → 1997 ··· → 2025

Примечание относительно индикатора времени
Внутренние часы данной видеокамеры работают в 24-часовом цикле.

Playback modes / Режимы воспроизведения

The playback mode (SP/LP) is selected automatically according to the format in which the tape has been recorded. The quality of the recorded picture in LP mode, however, will not be as good as that in SP mode.

Foreign 8 mm video
You may not play back tapes recorded on a different TV colour system. Because the TV colour systems differ from country to country, you may not be able to play back foreign pre-recorded tapes. Refer to the list of "Using your camcorder abroad" to check the TV colour system of foreign countries.

Режим воспроизведения (SP/LP) выбирается автоматически согласно формату, в котором была записана лента. Однако качество изображения, записанного в режиме LP будет несколько хуже, чем в режиме SP.

Иностранные 8 мм видеоленты
Вы не можете воспроизводить ленты, записанные в другой системе цветного телевидения. Так как системы цветного телевидения отличаются в зависимости от страны, то возможно Вы не сможете воспроизводить иностранные предварительно записанные ленты. Смотрите список в разделе "Использование Вашей видеокамеры за границей" для проверки системы цветного телевидения иностранных государств.

Tips for using the battery pack / Советы по использованию батарейного блока

This section shows you how you can get the most out of your battery pack.

Preparing the battery pack

Always carry additional batteries
Have sufficient battery pack power to do 2 to 3 times as much recording as you have planned.

Battery life is shorter in cold environment
Battery efficiency is decreased, and the battery will be used up more quickly, if you are recording in cold environment.

To save battery power
Turn the STANDBY switch on the camcorder down when not recording to save battery power.
A smooth transition between scenes can be made even if recording is stopped and started again. While positioning the subject, selecting an angle, or looking through the viewfinder lens or on the LCD screen, the lens moves automatically and the battery is used. The battery is also used when a cassette is inserted or removed.

В данном разделе показано, как Вы можете использовать наилучшим образом Ваш батарейный блок.

Подготовка батарейного блока

Всегда носите с собой дополнительные блоки
Имейте достаточное количество заряда в батарейных блоках, чтобы иметь возможность выполнить съемку от 2 до 3 раз.

Срок службы батарейного блока является более коротким в холодных условиях
Эффективность батарейного блока снижается и заряд будет израсходован быстрее, если Вы производите запись в холодных условиях.

Для сохранения заряда батарейного блока
Когда запись не производится, поверните выключатель видеокамеры STANDBY вниз для сохранения заряда батарейного блока. Между сценами может быть сделан плавный переход, даже если запись остановлена и начата опять. Во время позиционирования объекта, выбора угла или просмотра через объектив видоискателя или на экране ЖКД, объектив передвигается автоматически и батарейный блок используется. Батарейный блок также используется, когда вставляется и вынимается кассета.

Additional information Дополнительная информация

Tips for using the battery pack / Советы по использованию батарейного блока

When to replace the battery / Когда следует заменять батарею

While you are using your camcorder, the remaining battery indicator decreases gradually as battery power is used up.

Когда Вы используете видеокамеру, индикатор оставшегося заряда батареи постепенно уменьшается по мере израсходования заряда батареи.

When the remaining battery indicator reaches the lowest point, the ⌧ indicator appears and starts flashing.
When the ⌧ indicator changes from slow flashing to rapid flashing while you are recording, set the POWER switch to OFF on the camcorder and replace the battery pack. Leave the tape in the camcorder to obtain smooth transition between scenes before and after the battery pack has been replaced.

Note on the remaining battery indicator
The remaining battery indicator of the camcorder may indicate a different remaining capacity from that of the battery pack with its own indicator (not supplied). The indicator on the battery pack is more accurate.

Notes on the rechargeable battery pack

CAUTION
Never leave the battery pack in temperatures above 60°C (140°F), such as in a car parked in the sun or under direct sunlight.

Когда индикатор оставшегося заряда батареи достигнет низшей точки, появится и начнет мигать индикатор ⌧.
Если во время записи индикатор ⌧ изменяет скорость мигания с медленной на быструю, установите выключатель POWER в положение OFF на видеокамере и замените батарейный блок. Оставьте ленту в видеокамере для получения плавного перехода между сценами до и после того, как был заменен батарейный блок.

Примечание относительно индикатора оставшегося заряда батареи
Индикатор оставшегося заряда батареи видеокамеры может показывать оставшуюся емкость заряда, несколько отличающуюся от той, что показывает батарейный блок со своим собственным индикатором (не прилагается). Индикатор на батарейном блоке является более точным.

Примечания относительно перезаряжаемого батарейного блока

ПРЕДОСТЕРЕЖЕНИЕ
Никогда не оставляйте батарейный блок при температуре выше 60°C (140°F), как например, в автомобиле, припаркованном на солнце или под прямыми солнечными лучами.

Tips for using the battery pack / Советы по использованию батарейного блока

The battery heats up
During charging or recording, the battery pack heats up. This is caused by energy that has been generated and a chemical change that has occurred inside the battery pack. This is not cause for concern and is normal.

Battery pack care
- **Remove the battery pack from the camcorder after using it,** and keep it in a cool place. When the battery pack is installed to the camcorder, a small amount of current flows to the camcorder even if the POWER switch is set to OFF. This shortens battery life.
- The battery pack is always discharging even when it is not in use after charging. Therefore, you should charge the battery right before using the camcorder.

How to use the switch on the battery pack
When the switch is supplied with the battery pack ([a] on page 60), you can use it to find whether the battery pack is charged or not. Set the switch to the "no mark" position when charging is completed. Set the switch to the "red mark" position when the battery is used up (or in whichever direction you want to remind yourself).

The life of the battery pack
If the battery indicator flashes rapidly just after turning on the camcorder with a fully charged battery pack, the battery pack should be replaced with a new fully charged one.

Charging temperature
You should charge batteries at temperatures from 10°C to 30°C (from 50°F to 86°F). Lower temperatures require a longer charging time.

Батарейный блок нагревается
Во время зарядки или записи батарейный блок нагревается. Это происходит вследствие генерируемой энергии и химических изменений, которые происходят внутри батарейного блока. Это не должно быть причиной для беспокойства и является нормальным.

Уход за батарейным блоком
- **Снимите батарейный блок с видеокамеры после пользования** и храните его в прохладном месте. Если батарейный блок установлен на видеокамере, небольшое количество электрического тока будет поступать на видеокамеру, даже, если выключатель POWER установлен в положение OFF. Это сокращает срок службы батареи.
- Батарейный блок всегда разряжается, даже если он не используется после зарядки. Поэтому Вам следует зарядить батарейный блок непосредственно перед использованием видеокамеры.

Как использовать переключатель на батарейном блоке
Если батарейный блок оснащен переключателем ([a] на стр. 60), то Вы можете использовать его для определения, заряжен ли батарейный блок или нет. Установите переключатель в позицию "без метки", если батарейный блок полностью заряжен. Установите переключатель в позицию "красной метки", если заряд батарейного блока израсходован (или же в какое-либо другое положение для напоминания).

Срок службы батарейного блока
Если индикатор заряда батареи быстро мигает сразу после включения видеокамеры с полностью заряженным батарейным блоком, то батарейный блок следует заменить на новый, полностью заряженный.

Температура зарядки
Вам следует заряжать батарейный блок при температуре от 10°C до 30°C (от 50°F до 86°F). При более низкой температуре требуется более длительное время зарядки.

Additional information Дополнительная информация

Tips for using the battery pack / Советы по использованию батарейного блока

Notes on charging

A brand-new battery
A brand-new battery pack is not charged. Before using the battery pack, charge it completely.

After long storage
Recharge the battery pack after a long period of storage. If the battery pack is charged fully but not used for a long time (about one year), it becomes discharged. Charge it again, but in this case the battery life will be shorter than normal. After several charging and discharging cycles, the battery life will recover its original capacity.

Notes on the terminals

If the terminals (metal parts on the back) are not clean, the battery charge duration will be shortened.
When the terminals are not clean or when the battery pack has not been used for a long time, repeatedly install and remove the battery pack a few times. This improves the contact condition. Also, wipe the + and – terminals with a soft cloth or paper.

Be Sure to Observe the Following
- **To prevent an accident caused by a short circuit, do not allow metal objects such as a necklace to touch the battery terminals. When carrying the battery pack, attach to the terminal cover. [b]**
- Keep the battery pack away from fire.
- Keep the battery pack dry.
- Do not open or try to disassemble the battery pack.
- Do not expose the battery pack to any mechanical shock.

[a]

Примечание по зарядке

Новый батарейный блок
Новый батарейный блок не заряжен. Перед использованием батарейного блока полностью зарядите его.

После длительного хранения
Перезарядите батарейный блок после длительного периода хранения. Если батарейный блок был полностью заряжен, но не использовался длительное время (около 1 года), он разрядится. Зарядите его снова, однако в этом случае срок службы батарейного блока будет короче, чем обычно. После нескольких циклов зарядки и разрядки срок службы батарейного блока восстановится в соответствии со своей первоначальной емкостью.

Примечания относительно контактов

Если контакты (металлические части на задней части) загрязнены, продолжительность заряда батареи сократится. Если контакты загрязнены или если батарейный блок не использовался длительное время, повторите установку и снятие батарейного блока несколько раз. Это улучшает состояние контактов. Протрите также контакты + и – мягкой тканью или салфеткой.

Не забудьте соблюдать следующее
- **Для предотвращения несчастного случая, вызванного коротким замыканием, не допускайте, чтобы металлические объекты, такие, как ожерелье, прикасались к контактам батареи. Носите батарейный блок с крышкой для контактов. [b]**
- Храните батарейный блок вдали от огня.
- Храните батарейный блок в сухом виде.
- Не открывайте и не пытайтесь разобрать батарейный блок.
- Не подвергайте батарейный блок каким-либо механическим ударным воздействиям.

[b]

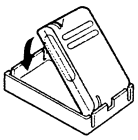

Maintenance information and precautions / Информация по уходу за аппаратом и предосторожности

Moisture condensation

If the camcorder is brought directly from a cold place to a warm place, moisture may condense inside the camcorder, on the surface of the tape, or on the lens. In this condition, the tape may stick to the head drum and be damaged or the camcorder may not operate correctly. To prevent possible damage under these circumstances, the camcorder is furnished with moisture sensors. Please take the following precautions.

Inside the camcorder
When the ⚅ and ⏏ indicators flash, moisture has condensed inside the camcorder. If this happens, no other functions except for tape ejection will work.
Eject the tape, turn off the camcorder and leave it with the cassette compartment open for at least one hour. The camcorder can be used again if the ⚅ indicator does not appear when the power is turned on again.

On the lens
If moisture condenses on the lens, no indicator appears, but the picture becomes dim. Turn off the power and do not use the camcorder for about one hour.

How to prevent moisture condensation
When bringing the camcorder from a cold place to a warm place, put the camcorder in a plastic bag and allow it to adapt to room conditions over a period of time.
(1) Be sure to tightly seal the plastic bag containing the camcorder.
(2) Remove the bag when the air temperature inside it has reached the temperature surrounding it (after about one hour).

Конденсация влаги

Если видеокамера внесена непосредственно из холодного места в теплое, внутри видеокамеры может конденсироваться влага, а также на поверхности ленты или на объективе. При таком условии, лента может прилипнуть к барабану головки и будет повреждена или же видеокамер може работать неправильно. Для предотвращения возможного повреждения ввиду таких обстоятельств в видеокамеру встроены датчики влаги. Соблюдайте следующие предосторожности.

Внутри видеокамеры
Если мигают ⚅ индикаторы и ⏏, внутри видеокамеры произошла конденсация влаги.
В случае, если это произошло, ни одна из функций, кроме выталкивания кассеты, не будет работать. Откройте отсек кассеты, выключите видеокамеру и оставьте ее примерно на один час.
Видеокамера снова может быть использована, если индикатор ⚅ не появится, когда питание будет включено опять.

На объективе
Если влага сконденсировалась на объективе, то никакая индикация появляться не будет, но изображение становится тусклым. Отключите питание и не используйте видеокамеру в течение 1 часа.

Как предотвратить конденсацию влаги
При внесении видеокамеры с холодного места в теплое положите видеокамеру в полиэтиленовый пакет и дайте ей возможность адаптироваться к комнатным условиям в течение определенного периода времени.
(1) Не забудьте герметично завязать полиэтиленовый пакет, содержащий видеокамеру.
(2) Снимите пакет, когда температура внутри него достигнет температуры окружающей среды (примерно спустя 1 час).

Additional information / Дополнительная информация

Maintenance information and precautions / Информация по уходу за аппаратом и предосторожности

Video head cleaning

To ensure normal recording and clear pictures, clean the video heads. When ⊗ appears in CAMERA mode or playback pictures are "noisy" or hardly visible, the video heads may be dirty.

[a] → [b]

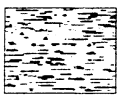

[a] Slightly dirty
[b] Dirty
If this happens, clean the video heads with the Sony V8-25CLH cleaning cassette (not supplied). After checking the picture, if it is still "noisy", repeat the cleaning. (Do not repeat cleaning more than 5 times in one session.)

Caution
Do not use a commercially available wet-type cleaning cassette. It may damage the video heads.

Note
If the V8-25CLH cleaning cassette is not available in your area, consult your nearest Sony dealer.

Очистка головок

Для обеспечения нормальной записи и четкого изображения видеоголовки следует очищать. Если индикатор ⊗ появляется в режиме CAMERA или воспроизводимое изображение является "зашумленным" или трудно различимым, видеоголовки могут быть загрязнены.

[a] Слегка загрязнены
[b] Загрязнены
Если это произошло, очистите видеоголовки с помощью очистительной кассеты V8-25CLH (не прилагается). После проверки изображения, если оно всё ещё "зашумлено", повторите очистку. (Не повторяйте очистку более 5 раз за один прием).

Предостережение
Не используйте имеющиеся в продаже очистительные кассеты влажного типа. Это может повредить видеоголовки.

Примечание
Если очистительной кассеты V8-25CLH нет в продаже в Вашей области, обратитесь в Ваше ближайшее агентство Sony.

Maintenance information and precautions / Информация по уходу за аппаратом и предосторожности

Removing dust from inside the viewfinder

(1) Remove the screw with a screwdriver (not supplied). Then, while sliding the RELEASE knob, turn the eyecup in the direction of the arrow and pull it out.
(2) Clean the surface with a commercially available blower.

Удаление пыли изнутри видоискателя

(1) Снимите винт с помощью отвертки (не прилагается). Затем передвигая ручку RELEASE, поверните окуляр в направлении стрелки и снимите его.
(2) Очистите поверхность продувочным устройством, приобретенным коммерческим способом.

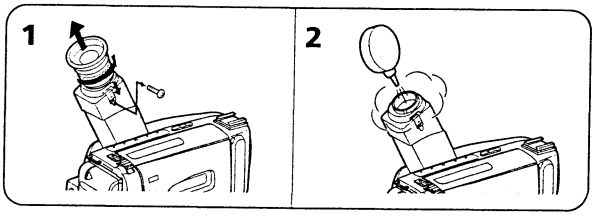

To reattach the eyecup
(1) Align the groove on the eyecup with the • mark on the barrel.
(2) Turn the eyecup in the direction of the arrow.
(3) Replace the screw.

Для прикрепления окуляра
(1) Совместите канавку на окуляре с меткой • на корпусе.
(2) Поверните окуляр в направлении стрелки.
(3) Установите винт.

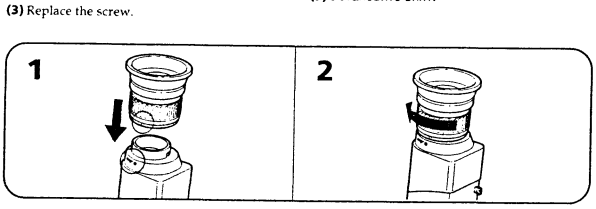

Caution
Do not remove any other screws. You may remove only the screw to remove the eyecup.

Предостережение
Не снимайте какие-либо другие винты. Вы можете снимать только винт для снятия окуляра.

Additional information / Дополнительная информация

Precautions

Camcorder operation

- Operate the camcorder using 6.0 V (battery pack), or 7.5 V (AC power adaptor).
- For DC or AC operation, use only the recommended accessories.
- Should any solid object or liquid fall into the casing, unplug the camcorder and have it checked by your nearest Sony dealer before operating it any further.
- Avoid rough handling or mechanical shock. Be particularly careful of the lens.
- Keep the POWER switch set to OFF when not using the camcorder.
- Do not wrap up the camcorder and operate it since heat may build up internally.
- Keep the camcorder away from strong magnetic fields or mechanical vibration.
- Do not push the LCD screen.
- If the camcorder is used in a cold place, a residual image may appear on the LCD screen. This is not a malfunction.
- While using the camcorder, the back of the LCD screen may heat up. This is not a malfunction.

On handling tapes

Do not insert anything in the small holes on the rear of the cassette. These holes are used to sense the type of tape, thickness of tape, and if the recording tab is out or in.

Camcorder care

- When the camcorder is not to be used for a long time, disconnect the power source and remove the cassette. Periodically turn on the power, operate the camera and player sections and play back a tape for about 3 minutes.
- Clean the lens with a soft brush to remove dust. If there are fingerprints on the lens, remove them with a soft cloth.

Предосторожности

Работа с видеокамерой

- Эксплуатируйте видеокамеру используя 6,0 В (батарейный блок) или 7,5 В (сетевой адаптер перем. тока).
- Для работы от постоянного или переменного тока используйте только рекомендуемые принадлежности.
- В случае попадания каких-либо твердых предметов или жидкости внутрь корпуса камеры, отключить видеокамеру и проверить ее в ближайшем агентстве Sony перед дальнейшей эксплуатацией.
- Избегайте грубого обращения с видеокамерой или механического ударного воздействия. Будьте особенно осторожны с объективом.
- Держите выключатель POWER в положении OFF, если видеокамера не используется.
- Не заворачивайте видеокамеру и не работайте таким образом с ней, поскольку внутри камеры может подняться температура.
- Держите видеокамеру вдали от сильных магнитных полей или механических вибраций.
- Не нажимайте на экран ЖКД.
- Если видеокамера используется в холодном месте, то послеизображение может появиться на экране ЖКД. Это не является неисправностью.
- Во время использования видеокамеры тыльная часть экрана ЖКД может нагреваться. Это не является неисправностью.

Относительно обращения с лентами

Не вставляйте никаких предметов в маленькие отверстия на задней стороне кассеты. Эти отверстия используются для определения типа ленты, толщины ленты и наличия лепестка записи.

Уход за видеокамерой

- Если видеокамера не будет использоваться длительное время, отключите источник питания и извлеките кассету. Периодически включайте питание, производите операции с видеокамерой и секцией плейера и воспроизводите ленту порядка 3 минут.
- Очищайте объектив мягкой кисточкой для удаления пыли. Если на поверхности объектива имеются отпечатки пальцев, удалите их с помощью мягкой ткани.

- If there are fingerprints on the LCD screen, remove them using an LCD cleaning kit (not supplied).
- Clean the camcorder body with a soft dry cloth, or a soft cloth lightly moistened with a mild detergent solution. Do not use any type of solvent which may damage the finish.
- Do not let sand get into the camcorder. When you use the camcorder on a sandy beach or in a dusty place, protect it from the sand or dust. Sand or dust may cause the unit to malfunction, and sometimes this malfunction cannot be repaired.

AC power adaptor

Charging

- Attach the battery pack firmly.
- Place the battery pack on a flat surface without vibration during charging.

Others

- Unplug the unit from the mains when not in use for a long time. To disconnect the mains lead, pull it out by the plug. Never pull the cord itself.
- Do not operate the unit with a damaged cord or if the unit has been dropped or damaged.
- Do not bend the AC power cord (mains lead) forcibly, or put a heavy object on it. This will damage the cord and may cause a fire or an electrical shock.
- Be sure that nothing metallic comes into contact with the metal parts of the connecting plate. If this happens, a short may occur and the unit may be damaged.
- Always keep the metal contacts clean.
- Do not disassemble the unit.
- Do not apply mechanical shock or drop the unit.
- While the unit is in use, particularly during charging, keep it away from AM receivers and video equipment because it will disturb AM reception and video operation.

- Если на экране ЖКД имеются отпечатки пальцев, удалите их, используя набор для чистки ЖКД (не прилагается).
- Очищайте корпус видеокамеры мягкой сухой тканью или же мягкой тканью, слегка смоченной в мягком растворе моющего средства. Не используйте никаких растворителей, поскольку это может повредить отделку.
- Не допускайте попадания песка в видеокамеру. В случае использования видеокамеры на песчаном пляже или в пыльном месте предпримите все меры, чтобы предохранить ее от песка или пыли. Песок или пыль могут привести к неисправности и иногда такая неисправность может быть неисправима.

Сетевой адаптер перем. тока

Зарядка

- Присоедините надежно батарейный блок.
- Разместите батарейный блок на плоской поверхности без вибрации во время зарядки.

Прочее

- Отсоедините аппарат от электрической сети, если он не используется в течение длительного времени. Для отсоединения сетевого провода вытащите его за разъем. Никогда не тяните за сам провод.
- Не эксплуатируйте аппарат с поврежденным шнуром или же, если аппарат был уронен или поврежден.
- Не сгибайте сетевой шнур перем. тока (сетевой провод) и не кладите тяжелые предметы на него. Это может повредить сетевой шнур и может привести к пожару или поражению электрическим током.
- Следите за тем, чтобы никакие металлические предметы не приходили в контакт с металлическими деталями соединительной пластины. Если это произойдет, то может возникнуть короткое замыкание и аппарат может быть поврежден.
- Всегда поддерживайте металлические контакты в чистоте.
- Не разбирайте аппарат.
- Не подвергайте аппарат механическим ударам и не роняйте его.
- Если аппарат находится в эксплуатации, особенно в режиме зарядки, держите его вдали от приемников AM и видеооборудования, потому что он может нарушить прием AM и работу видеоаппаратуры.

- The unit becomes warm while in use. This is normal.
- Do not place the unit in locations that are:
  - Extremely hot or cold
  - Dusty or dirty
  - Very humid
  - Vibrating

Notes on the dry batteries

To avoid possible damage from battery leakage or corrosion, observe the following.

- Be sure to insert the batteries in the correct direction.
- Dry batteries are not rechargeable.
- Do not use a combination of new and old batteries.
- Do not use different types of batteries.
- The batteries slowly discharge while not in use.
- Do not use a battery that is leaking.

If battery leakage occurred

- Wipe off the liquid in the battery compartment carefully before replacing the batteries.
- If you touch the liquid, wash it off with water.

If any difficulty should arise, unplug the unit and contact your nearest Sony dealer.

- Аппарат становится теплым во время использования. Это является нормальным.
- Не размещайте аппарат в местах, которые:
  - крайне горячие или холодные
  - пыльные или грязные
  - очень влажные
  - подвержены вибрации

Примечания относительно батареек сухого типа

Во избежание возможного повреждения вследствие утечки внутреннего вещества из батареек или коррозии соблюдайте следующие меры предосторожности.

- Соблюдайте правильную полярность при установке батареек.
- Батарейки сухого типа не подлежат перезарядке.
- Не используйте вместе новые и старые батарейки.
- Не используйте вместе батарейки разного типа.
- Батарейки постепенно медленно разряжаются, если не используются.
- Не используйте батареек, из которых имеет место утечки внутреннего вещества.

В случае утечки внутреннего вещества из батареек

- Прежде, чем установить новые батарейки, тщательно протрите отсек батареек от жидкости.
- В случае прикасания к жидкости промойте ее водой.

В случае трудностей отсоедините аппарат и обратитесь в Ваше ближайшее агентство Sony.

Each country or area has its own electricity and TV colour systems. Before using your camcorder abroad, check the following points:

Power sources

You can use your camcorder in any country or area with the supplied AC power adaptor within 110 V to 240 V AC, 50/60 Hz.

Difference in colour systems

This camcorder is a PAL system-based camcorder. If you want to view the playback picture on a TV, it must be a PAL-system based TV or a SECAM system-based TV with a PAL-SECAM transcoder. Check the following list.

PAL system

Australia, Austria, Belgium, China, Denmark, Finland, Germany, Great Britain, Holland, Hong Kong, Italy, Kuwait, Malaysia, New Zealand, Norway, Portugal, Singapore, Spain, Sweden, Switzerland, Thailand, etc.

PAL M system

Brazil

PAL N system

Argentina, Paraguay, Uruguay

NTSC system

Bahama Islands, Bolivia, Canada, Central America, Chile, Colombia, Ecuador, Jamaica, Japan, Korea, Mexico, Peru, Surinam, Taiwan, the Philippines, the U.S.A., Venezuela, etc.

SECAM system

Bulgaria, Czech Republic, France, Guyana, Hungary, Iran, Iraq, Monaco, Poland, Russia, Slovak Republic, Ukraine, etc.

Каждая страна или область имеет свою собственную систему электрической сети и систему цветного телевидения. Перед использованием Вашей видеокамеры за рубежом проверьте следующие пункты:

Источники питания

Вы можете использовать Вашу видеокамеру в любой стране или области с прилагаемым сетевым адаптером перем. тока в пределах от 110 В до 240 В перем. тока, 50/60 Гц.

Различия в системах цветного телевидения

Данная видеокамера основана на системе PAL. Если Вы хотите просмотреть воспроизводимое изображение на телевизоре, он должен быть основан на системе PAL или же на системе SECAM с транскодером PAL-SECAM. Проверьте следующий список.

Система PAL

Австралия, Австрия, Бельгия, Великобритания, Германия, Голландия, Гонконг, Дания, Испания, Италия, Китай, Кувейт, Малайзия, Новая Зеландия, Норвегия, Португалия, Сингапур, Таиланд, Финляндия, Швеция, Швейцария, и др.

Система PAL-M

Бразилия

Система PAL-N

Аргентина, Парагвай, Уругвай

Система NTSC

Багамские острова, Боливия, Венесуэла, Канада, Колумбия, Корея, Мексика, Перу, Суринам, США, Тайвань, Филиппины, Центральная Америка, Чили, Эквадор, Ямайка, Япония и др.

Система SECAM

Болгария, Венгрия, Гайана, Ирак, Иран, Монако, Польша, Россия, Словацкая Республика, Украина, Франция, Чешская Республика и др.

English

Trouble check

If you run into any problem using the camcorder, use the following table to troubleshoot the problem. Should the difficulty persist, disconnect the power source and contact your Sony dealer or local authorized Sony service facility.

Camcorder

Power

Symptom	Cause and/or Corrective Actions
The power is not on.	• The battery pack is not installed. → Attach the battery pack firmly by pushing the lower part of the battery pack until it clicks twice. (p. 9) • The battery is dead. → Use a charged battery pack. (p. 7) • The AC power adaptor is not connected to mains. → Connect the AC power adaptor to mains. (p. 27)
The power goes off.	• While being operated in CAMERA mode, the camcorder has been in the Standby mode for more than 5 minutes. → Turn STANDBY down once and turn it up again. (p. 12) • The battery is dead. → Use a charged battery pack. (p. 7)
The battery pack is quickly discharged.	• The ambient temperature is too low. (p. 57) • The battery pack has not been charged fully. → Charge the battery pack again. (p. 7) • The battery pack is completely dead, and cannot be recharged. → Use another battery pack. (p. 59)

Operation

Symptom	Cause and/or Corrective Actions
START/STOP does not operate.	• The tape is stuck to the drum. → Eject the cassette. (p. 10) • The tape has run out. → Rewind the tape or use a new one. (p. 22) • The POWER switch is set to PLAYER. → Set it to CAMERA. (p. 11) • The tab on the cassette is out (red). → Use a new cassette or slide the tab. (p. 10)
The cassette cannot be removed from the holder.	• The battery is dead. → Use a charged battery pack or the AC power adaptor. (p. 7, 27)
No function except for cassette ejection works.	• Moisture condensation has occurred. → Remove the cassette and leave the camcorder for at least 1 hour. (p. 61)
The tape does not move when a tape transport button is pressed.	• The POWER switch is set to CAMERA or OFF. → Set it to PLAYER. (p. 22) • The tape has run out. → Rewind the tape or use a new one. (p. 22)
The date or time indicator is flashing.	• The lithium battery is weak or dead. → Replace the lithium battery with a new one. (p. 54) • You pressed DATE and TIME together for more than 2 seconds. The camcorder is not malfunctioning. → You may start recording. Flashing will stop soon.

Symptom	Cause and/or Corrective Actions
The End Search function does not activate.	• The cassette was ejected after you recorded on it. → The End Search function will not activate until you make a new recording after reinserting the cassette.
The date or time indicator disappears.	• Reset the date and time. (p. 55)
The SteadyShot function does not activate.	• STEADY SHOT is set to OFF. → Set STEADY SHOT to ON. (p. 45) • The SteadyShot function does not work when the wide mode is set to 16:9FULL. (p. 39)
The autofocusing function does not work.	• FOCUS is set to MANUAL. → Set it to AUTO. (p. 41) • Shooting contidions are not suitable for autofocus. → Set FOCUS to MANUAL to focus manually. (p. 41)
Recording stops in a few seconds.	• START/STOP MODE switch is set to ⏄ or 5SEC. → Set it to ⏄. (p. 33)
The title display position shifts.	• There are unwanted blanks before or after the title. → Delete them then select ⏎.
The fader function does not work.	• The START/STOP MODE switch is set to 5SEC or ⏄. → Set it to ⏄. (p. 33)

Picture

Symptom	Cause and/or Corrective Actions
The image on the viewfinder screen is not clear.	• The viewfinder lens is not adjusted. → Adjust the viewfinder lens. (p. 13)
A vertical band appears when a subject such as lights or a candle flame is shot against a dark background.	• The contrast between the subject and background is too high. The camcorder is not malfunctioning. → Change locations.
The picture is "noisy".	• The video heads may be dirty. → Clean the heads using the Sony V8-25CLH cleaning cassette. (p. 62)
The picture does not appear in the viewfinder.	• The LCD panel is open. → Close the LCD panel. (p. 16)
The picture does not appear on the LCD screen.	• Incorporated fluorescent tube is worn out. → Please contact your nearest Sony dealer.
A vertical band appears when shooting a very bright subject.	• The camcorder is not malfunctioning.
An unknown picture is displayed in the viewfinder or on the LCD screen.	• If 10 minutes elapsed after you set the POWER switch to CAMERA without inserting a cassette, the camcorder automatically starts the demonstration. → Insert the cassette, and the demonstration stops. You can make the demonstration not appear in the menu system. (p. 29)

Continued to the next page

Others

Symptom	Cause and/or Corrective Actions
The supplied Remote Commander does not work .	• COMMANDER is set to OFF. → Set it to ON in the menu system. (p. 29) • Something is blocking the infrared rays. → Remove the obstacle. • The battery is not inserted with the correct polarity. → Insert the battery with the correct polarity. (p. 83) • The batteries are dead. → Insert new ones. (p. 83)
There is dust in the viewfinder.	• Detach the eyecup and clean the viewfinder lens. (p. 63)

AC power adaptor

Symptom	Cause and/or Corrective Actions
The POWER lamp does not light.	• Set the selector to VTR (DC OUT) and disconnect the mains lead. After about one minute, try again. (p. 9)
The CHARGE lamp flashes.	• See the following chart.

When the CHARGE lamp flashes

Check through the following chart.

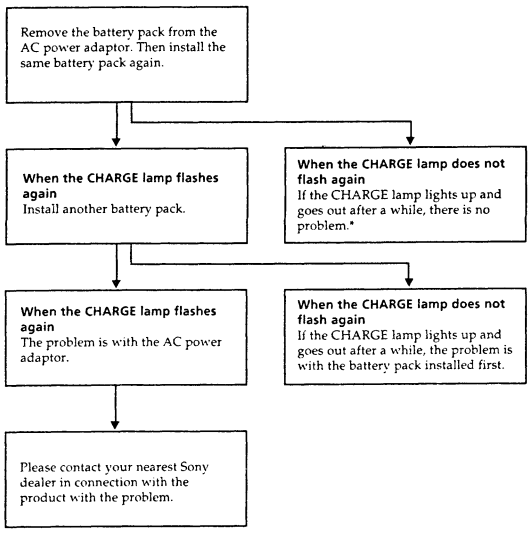

* If you use a battery pack which you have just bought or which has been left unused for a long time, the CHARGE lamp may flash at the first charging. This does not indicate a problem. Repeat again to charge with the same battery pack.

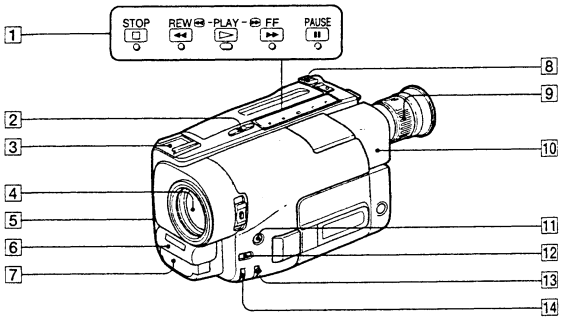

1 Tape transport buttons (p. 22, 24)
□ STOP
◀◀ REW (rewind)
▷ PLAY (playback)
▶▶ FF (fast forward)
II PAUSE
These buttons will function in PLAYER mode.

2 EDITSEARCH button (p. 20)

3 Accessory shoe

4 Lens cover

5 Recording lamp

6 Built-in microphone

7 Remote sensor (p. 83)
Aim the Remote Commander here for remote control.

8 Power zoom lever (p. 14)

9 Viewfinder adjustment ring (p. 13)

10 Viewfinder (p. 63, 85)

11 BACK LIGHT button (p. 44)

12 FADER button (p. 34)

13 FOCUS switch (p. 41)

14 Focus dial (p. 41)

1 Кнопки перемещения ленты (стр. 22, 24)
□ STOP (останов)
◀◀ REW (ускоренная перемотка назад)
▷ PLAY (воспроизведение)
▶▶ FF (ускоренна перемотка вперед)
II PAUSE (пауза)
Эти кнопки функционируют в режиме PLAYER.

2 Кнопка EDITSEARCH (стр. 20)

3 Держатель для вспомогательных принадлежностей

4 Крышка объектива

5 Лампочка записи

6 Встроенный микрофон

7 Дистанционный датчик (стр. 83)
Нацелить пульт дистанционного управления сюда для дистанционного контроля.

8 Рычаг приводного трасфокатора (стр. 14)

9 Кольцо регулировки видоискателя (стр. 13)

10 Видоискатель (стр. 63, 85)

11 Кнопка BACK LIGHT (стр. 44)

12 Кнопка FADER (стр. 34)

13 Переключатель FOCUS (стр. 41)

14 Диск фокусировки (стр. 41)

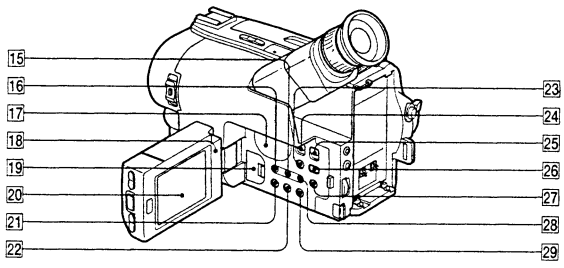

15 TIME button (p. 32)

16 DATE button (p. 32)

17 Speaker

18 Recording lamp

19 Lithium battery compartment (p. 54)

20 LCD screen (p. 16, 17, 22, 85)

21 WIDE button (p. 39) (CCD-TRV24E only)

22 TITLE button (p. 46)

23 DISPLAY button (p. 23)

24 STEADY SHOT switch (p. 45) (CCD-TRV24E only)

25 START/STOP MODE switch (p.11, 33)

26 PICTURE EFFECT button (p. 37)

27 MENU button (p. 29)

28 COUNTER RESET button (p. 13)

29 END SEARCH button (p. 25)

15 Кнопка TIME (стр. 32)

16 Кнопка DATE (стр. 32)

17 Громкоговоритель

18 Лампочка записи

19 Отсек литиевой батарейки (стр. 54)

20 Экран ЖКД (стр. 16, 17, 22, 85)

21 Кнопка WIDE (стр. 39) (только CCD-TRV24E)

22 Кнопка TITLE (стр. 46)

23 Кнопка DISPLAY (стр. 23)

24 Переключатель STEADY SHOT (стр. 45) (только модель CCD-TRV24E)

25 Переключатель START/STOP MODE (стр. 11, 33)

26 Кнопка PICTURE EFFECT (стр. 37)

27 Кнопка MENU (стр. 29)

28 Кнопка COUNTER RESET (стр. 13)

29 Кнопка END SEARCH (стр. 25)

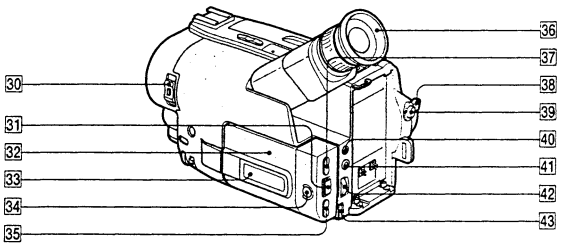

30 POWER switch (p. 11, 22)

31 PUSH OPEN button (p. 16, 17, 22)

32 LCD panel (p. 16, 17, 22)

33 Display window (p. 86)

34 PROGRAM AE button (p. 43)

35 VOLUME button (p. 22)

36 Eyecup (p. 63)

37 BRIGHT button (p. 16)

38 STANDBY switch (p. 11)

39 START/STOP button (p. 11)

40 LANC ↻ control jack
↻ stands for Local Application Control Bus system. The ↻ control jack is used for controlling the tape transport of video equipment and peripherals connected to it. This jack has the same function as the connectors indicated as CONTROL L or REMOTE.

41 🎧 (earphone) jack (p. 23)

42 Menu control dial (p. 29)

43 BATT (battery release) knob (p. 9)

30 Выключатель POWER (стр. 11, 22)

31 Кнопка PUSH OPEN (стр. 16, 17, 22)

32 Панель ЖКД (стр. 16, 17, 22)

33 Окошко дисплея (стр. 86)

34 Диск PROGRAM AE (стр. 43)

35 Кнопка VOLUME (стр. 22)

36 Окуляр (стр. 63)

37 Кнопка BRIGHT (стр.16)

38 Переключатель STANDBY (стр. 11)

39 Кнопка START/STOP (стр. 11)

40 Гнездо управления LANC ↻
↻ означает систему канала местного управления. Гнездо управления ↻ используется для контроля за перемещением ленты видеооборудования и перефирийных устройств, подключенных нему. Данное гнездо имеет ткую же функцию, как и разъемы, обозначенные как CONTROL L или REMOTE.

41 Гнездо 🎧 (наушников) (стр. 23)

42 Диск управления меню (стр. 29)

43 Ручка BATT (освобождения батарейного блока) (стр. 9)

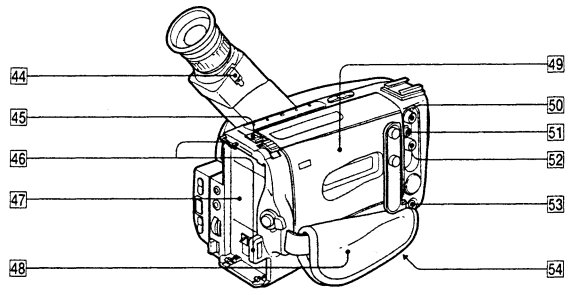

44 Eyecup release knob (p. 63)

45 EJECT knob (p. 10)

46 Hooks for shoulder strap

47 Battery mounting surface (p. 9)

48 Grip strap (p. 18)

49 Cassette compartment (p. 10)

50 VIDEO OUT jack (p. 50)

51 RFU DC OUT (RFU adaptor DC out) jack

52 AUDIO OUT jack (p. 50)

53 MIC (microphone) jack
Connect an external microphone (not supplied). This jack also accepts a "plug-in-power" microphone.

54 Tripod receptacle (p. 19)

Attaching the shoulder strap

Attach the supplied shoulder strap to the hooks for the shoulder strap 46.

44 Ручка освобождения окуляра (стр. 63)

45 Ручка EJECT (стр. 10)

46 Крючки для плечевого ремня

47 Поверхность установки батарейного блока (стр. 9)

48 Ременной захват (стр. 18)

49 Отсек кассеты (стр. 10)

50 Гнездо VIDEO OUT (стр. 50)

51 Гнездо RFU DC OUT (выход адаптера пост. тока RFU)

52 Гнездо AUDIO OUT (стр. 50)

53 Гнездо MIC (микрофона)
Подсоедините внешний микрофон (не прилагается).
К этому гнезду также можно подсоединять микрофон с "выключателем питания".

54 Дежатель треноги (стр. 19)

Прикрепление плечевого ремня

Прикрепите прилагаемый плечевой ремень к крючкам для плечевого ремня 46.

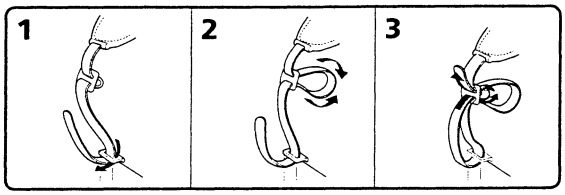

Remote Commander

Using the Remote Commander

Make sure that COMMANDER is set to ON in the menu system.

The buttons that have the same name on the Remote Commander as on the camcorder function identically.

Пульт дистанционного управления

Использование пульта дистанционного управления

Убедитесь, что COMMANDER установлен в положение ON в системе меню.

Кнопки с одинаковыми названиями на пульте дистанционного управления и на видеокамере функционируют идентично.

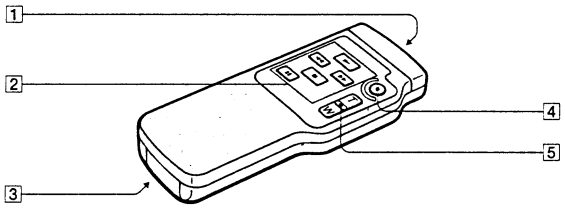

1 **Transmitter**
Point toward the remote sensor to control the camcorder after turning on the camcorder.

2 **Tape transport buttons (p. 22, 24)**

3 **R6 (size AA) battery compartment (p. 83)**

4 **START/STOP button (p. 11)**

5 **Power zoom button (p. 14)**
The zooming speed is unchangeable on the Remote Commander.

1 **Передатчик**
Направьте его на дистанционный датчик для управления видеокамерой после включения питания видеокамеры.

2 **Кнопки перемещения ленты (стр. 22, 24)**

3 **Отсек батареек R6 (размер AA) (стр. 83)**

4 **Кнопка START/STOP (стр. 11)**

5 **Кнопка приводного трансфокатора (стр. 14)**
Скорость трансфокации является неизменной при управлении с помощью пульта дистанционного управления.

To prepare the Remote Commander

Insert two R6 (size AA) batteries by matching the + and – on the batteries to the diagram inside the battery compartment.

Для подготовки пульта дистанционного управления

Вставьте две батарейки R6 (размера AA) в соответствии полярности + и – на батарейках схеме внутри батарейного отсека.

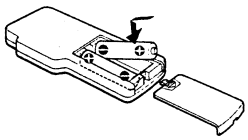

Note on battery life
The batteries for the Remote Commander last about 6 months under normal operation. When the batteries become weak or dead, the Remote Commander does not work.

To avoid damage from possible battery leakage
Remove the batteries when you will not use the Remote Commander for a long time.

Remote control direction

Aim the Remote Commander to the remote sensor within the range as shown below.

Примечание относительно срока службы батареек
Батареек для пульта дистанционного управления хватает примерно на 6 месяцев при нормальной эксплуатации. Если заряд батареек станет слабым или израсходуется совсем, пульт дистанционного управления перестанет функционировать.

Во избежание повреждения вследствие возможной утечки содержимого батареек
Удалите батарейки, если Вы не будете использовать пульт дистанционного управления длительное время.

Направление пульта дистанционного управления
Направьте пульт дистанционного управления на дистанционный датчик в пределах диапазона, показанного ниже.

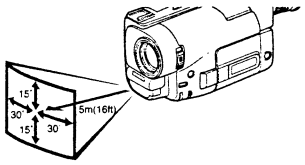

Notes on the Remote Commander
- Keep the remote sensor away from strong light sources such as direct sunlight or illumination. Otherwise, the remote control may not be effective.
- Be sure that there is no obstacle between the remote sensor on the camcorder and the Remote Commander.
- This camcorder works at commander mode VTR 2. The commander modes (1, 2, and 3) are used to distinguish this camcorder from other Sony VCRs to avoid remote control misoperation. If you use another Sony VCR at commander mode VTR 2, we recommend you change the commander mode or cover the remote sensor of the VCR with black paper.

To watch the demonstration

You can start the demonstration by setting in the menu system.
You can also start the demonstration by the following operation.

To enter demo mode
(1) Eject the cassette and set the POWER switch to PLAYER.
(2) Turn STANDBY up.
(3) While holding down ▷ set the POWER switch to CAMERA.

To exit demo mode
(1) Set the POWER switch to PLAYER.
(2) Turn STANDBY up.
(3) While holding down □ set the POWER switch to CAMERA.

Примечания относительно пульта дистанционного управления
- Располагайте дистанционный датчик вдали от сильных источников света, таких, как прямой солнечный свет или иллюминация. В противном случае дистанционное управление может не срабатывать.
- Убедитесь, что между дистанционным датчиком на видеокамере и пультом дистанционного управления нет препятствия.
- Данная видеокамера работает в режиме пульта управления VTR 2 (KBM 2). Режимы пульта управления (1, 2 и 3) используются для отличия данной видеокамеры от других KBM фирмы Sony, чтобы избежать неправильного срабатывания при дистанционном управлении. Если Вы используете другие KBM фирмы Sony в режиме пульта управления VTR 2 (KBM 2), рекомендуется изменить режим на пульте управления или закрыть дистанционный датчик KBM черной бумагой.

Для просмотра демонстрации

Вы можете начать демонстрацию путем установки в системе меню.
Вы можете также начать демонстрацию путем следующей операции.

Для входа в демонстрационный режим
(1) Вытолкните кассету и установите выключатель POWER в положение PLAYER.
(2) Поверните STANDBY вверх.
(3) Нажимая ▷, установите выключатель POWER в положение CAMERA.

Для выхода из демонстрационного режима
(1) Установите выключатель POWER в положение PLAYER.
(2) Поверните STANDBY вверх.
(3) Нажимая □, установите выключатель POWER в положение CAMERA.

Operation indicators

In the viewfinder and on the LCD screen

Индикаторы работы

В видоискателе и на экране ЖКД

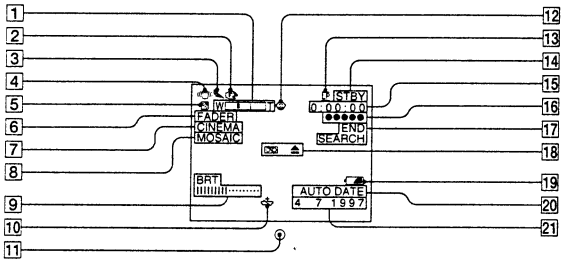

1 **Power zoom indicator (p. 15)**

2 **Manual focus indicaror (p. 41)**

3 **PROGRAM AE indicator (p. 42)**

4 **SteadyShot indicator (p. 45) (CCD-TRV24E only)**

5 **Back light indicator (p. 44)**

6 **FADER indicator (p. 34)**

7 **Wide mode indicator (p. 38) (CCD-TRV24E only)**

8 **Picture Effect indicator (p. 36)**

9 **BRT (brightness) indicator (p. 16)**
VOL (volume) indicator (p. 22)

10 **Lithium battery indicator (p. 53)**

11 **Recording lamp/battery lamp (p. 11) (in the viewfinder)**

12 **Mirror mode indicator (p. 17)**

13 **SP/LP recording mode indicator (p. 11)**

14 **Tape transport mode indicator (p. 11)**

15 **Tape counter (p. 13)**

Continued to the next page

1 **Индикатор приводного трансфокатора (стр. 15)**

2 **Индикатор ручной фокусировки (стр. 41)**

3 **Индикатор PROGRAM AE (стр. 42)**

4 **Индикатор стабилизации съемки SteadyShot (стр. 45) (только CCD-TRV24E)**

5 **Индикатор задней подсветки (стр. 44)**

6 **Индикатор FADER (стр. 34)**

7 **Индикатор широкоэкранного режима (стр. 38) (только CCD-TRV24E)**

8 **Индикатор эффекта изображения (стр. 36)**

9 **Индикатор BRT (яркости) (стр. 16)**
Индикатор VOL (громкости) (стр. 22)

10 **Индикатор литиевой батарейки (стр. 53)**

11 **Лампочка записи/лампочка батарейного блока (стр. 11) (в видоискателе)**

12 **Индикатор зеркального режима (стр. 17)**

13 **Индикатор режима записи SP/LP (стр. 11)**

14 **Индикатор режима перемещения ленты (стр. 11)**

15 **Счетчик ленты (стр. 13)**

Продолжение следует

16 5SEC recording indicator (p. 33)
17 END SEARCH indicator (p. 25)
18 Warning indicators (p. 87)
19 Remaining battery indicator (p. 58)
20 AUTO DATE indicator (p. 11)
21 Date or Time (p. 32)

16 Индикатор пятисекундной записи 5SEC (стр. 33)
17 Индикатор END SEARCH (стр. 25)
18 Предупреждающие индикаторы (стр. 87)
19 Индикатор оставшегося заряда батарейного блока (стр. 58)
20 Индикатор AUTO DATE (стр. 11)
21 Дата или время (стр. 32)

In the display window

В окошке дисплея

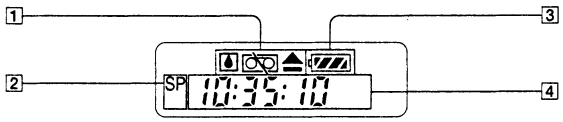

1 Warning indicators (p. 87)
2 Recording mode indicator (SP/LP) (p. 11)
3 Remaining battery indicator (p. 58)
4 Date or time (p. 32)
Tape counter (p. 13)

1 Предупреждающие индикаторы (стр. 87)
2 Индикатор режима записи (SP/LP) (стр. 11)
3 Индикатор оставшегося заряда батарейного блока (стр. 58)
4 Дата или время (стр. 32)
Счетчик ленты (стр. 13)

Warning indicators — Предупреждающие индикаторы

The warning indicators and the recording lamp flash to inform you of the following situations. The illustrations below are the warning indicators of the viewfinder and the LCD screen. The same indicators flash also in the display window.
♪: You can hear the beep sound when BEEP is set to ON in the menu system.

Предупреждающие индикаторы и лампочка записи мигают, чтобы информировать Вас о следующих возможных ситуациях. Приведенные ниже рисунки показывают предупреждающие индикаторы видоискателя и экрана ЖКД. Такие же индикаторы мигают также в окошке дисплея.
♪: Вы можете слышать зуммерный звуковой сигнал при установке BEEP в положение ON в системе меню.

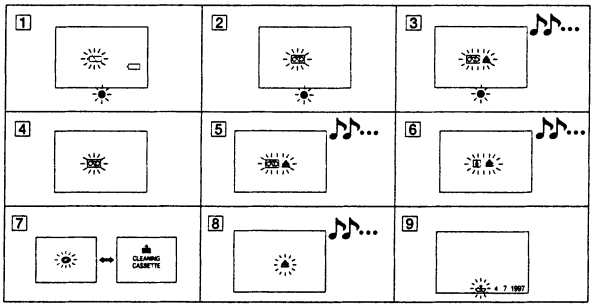

1 **The battery is weak or dead.**
Slow flashing: The battery is weak.
Fast flashing: The battery is dead.
2 **The tape is near the end.**
3 **The tape has run out.**
4 **No tape has been inserted.**
5 **The tab on the tape is out (red). (p.10)**
6 **Moisture condensation has occurred. (p. 61)**
⏏ indicator appears only when the cassette is inserted.
7 **The video heads may be contaminated. (p. 62)**
8 **Some other trouble has occurred.**
Disconnect the power source and contact your Sony dealer or local authorized facility.
9 **The lithium battery is weak or is not installed. (p. 53)**
This indicator flashes just only after powering on.

1 **Заряд батареи слабый или израсходован.**
Медленное мигание: заряд батареи слабый.
Быстрое мигание: заряд батареи израсходован.
2 **Лента приближается к концу.**
3 **Лента закончилась.**
4 **Не вставлена кассета.**
5 **На кассете отсутствует лепесток (красный). (стр. 10)**
6 **Произошла конденсация влаги. (стр. 61)**
Индикатор ⏏ появляется только при вставленной кассете.
7 **Возможно загрязнены видеоголовки. (стр. 62)**
8 **Имеют место другие неисправности.**
Отсоедините источник питания и обратитесь в Ваше агентство фирмы Sony или местное уполномоченное ремонтное предприятие.
9 **Заряд литиевой батарейки является слабым или же литиевая батарейка не установлена. (стр. 53)**
Этот индикатор мигает только после включения питания.

SECTION 2
DISASSEMBLY

NOTE : Follow the disassembly procedure in the numerical order given.

2-1(1). REMOVAL OF MA-297 BOARD, F PANEL ASSEMBLY AND MICROPHONE (EXCEPT TRV14E/TRV24E MODEL)

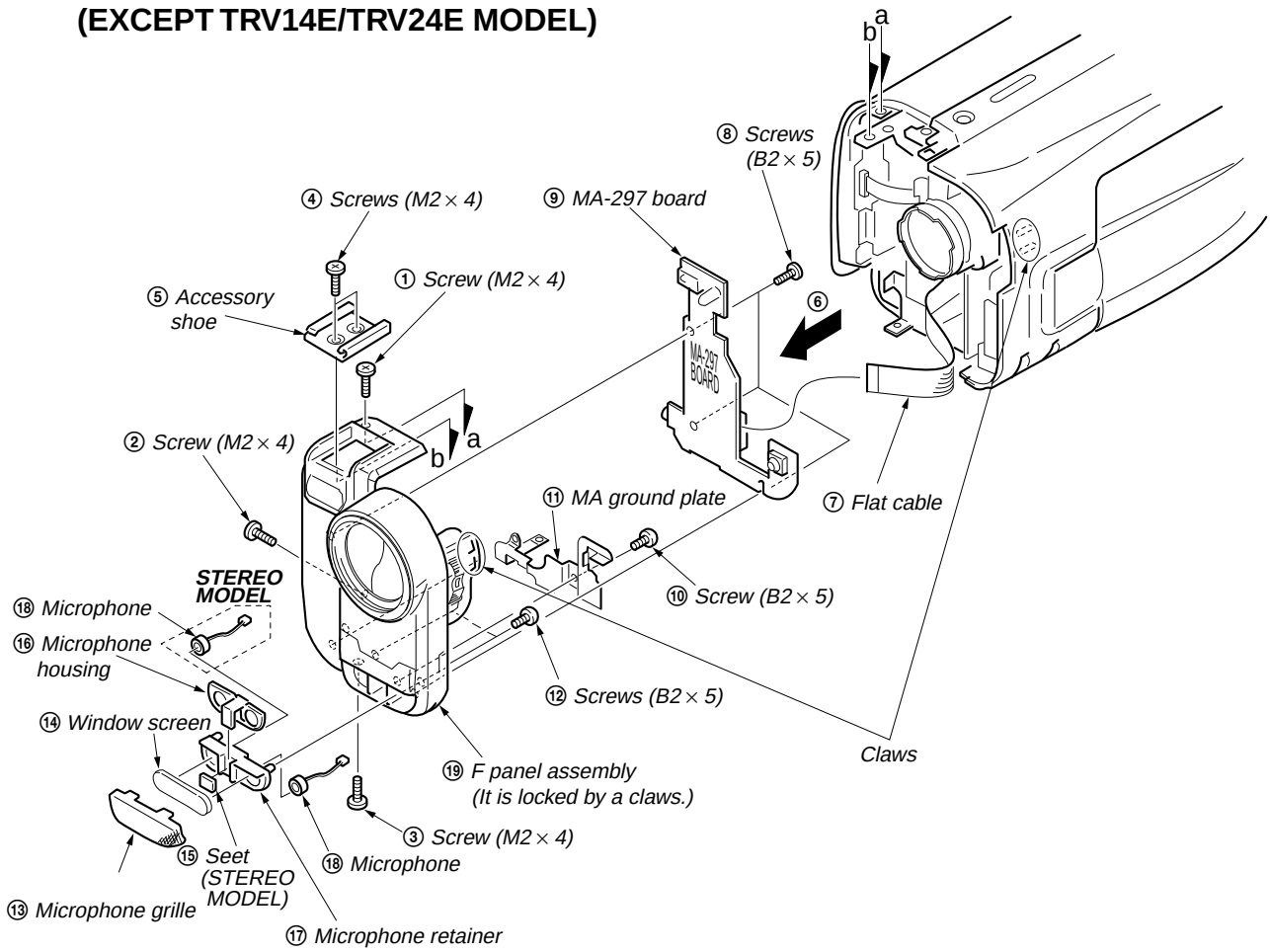

2-1(2). REMOVAL OF MA-296 BOARD, F PANEL ASSEMBLY AND MICROPHONE (TRV14E/TRV24E MODEL)

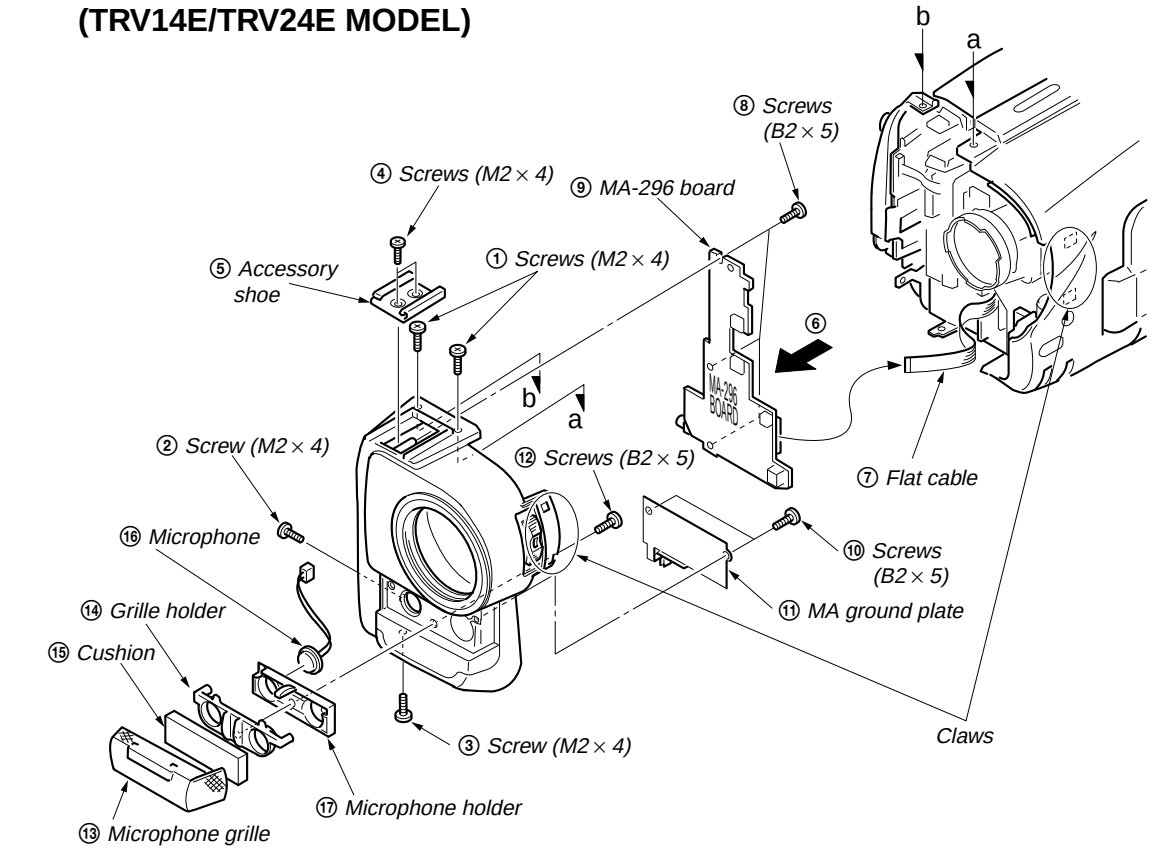

2-2. REMOVAL OF CABINET ASSEMBLY

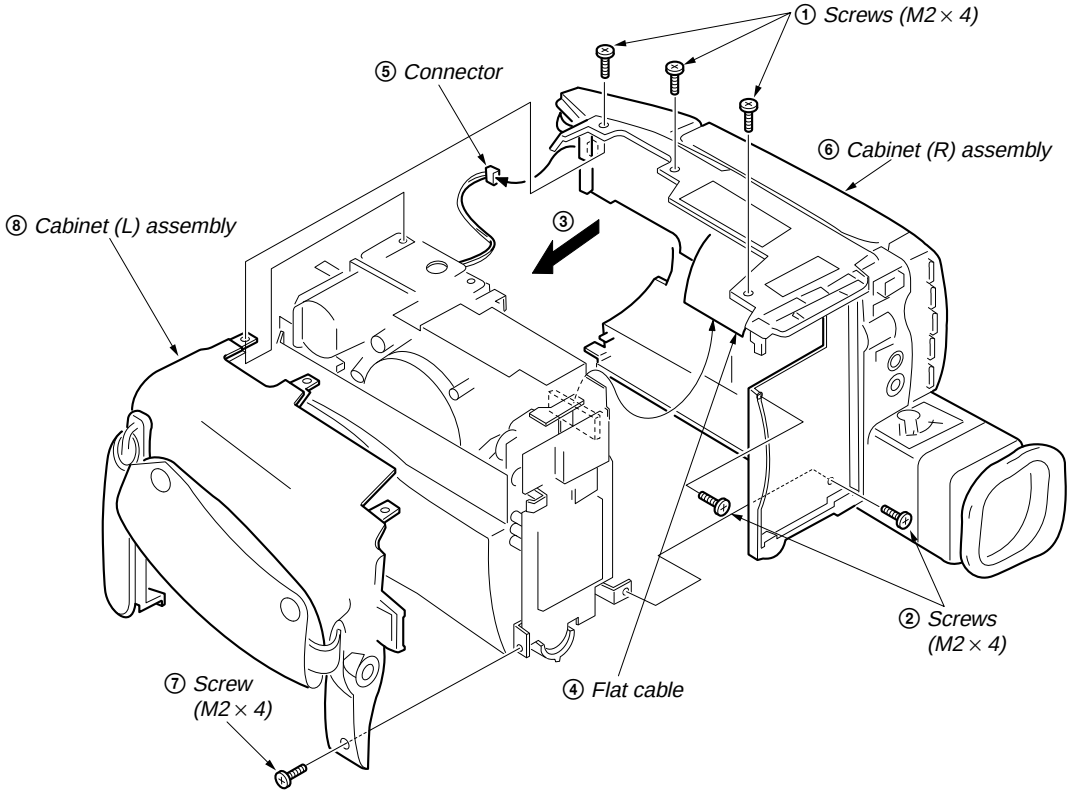

2-3. REMOVAL OF CASSETTE LID ASSEMBLY, LS LID, JK-154/155 and SE-60 BOARD

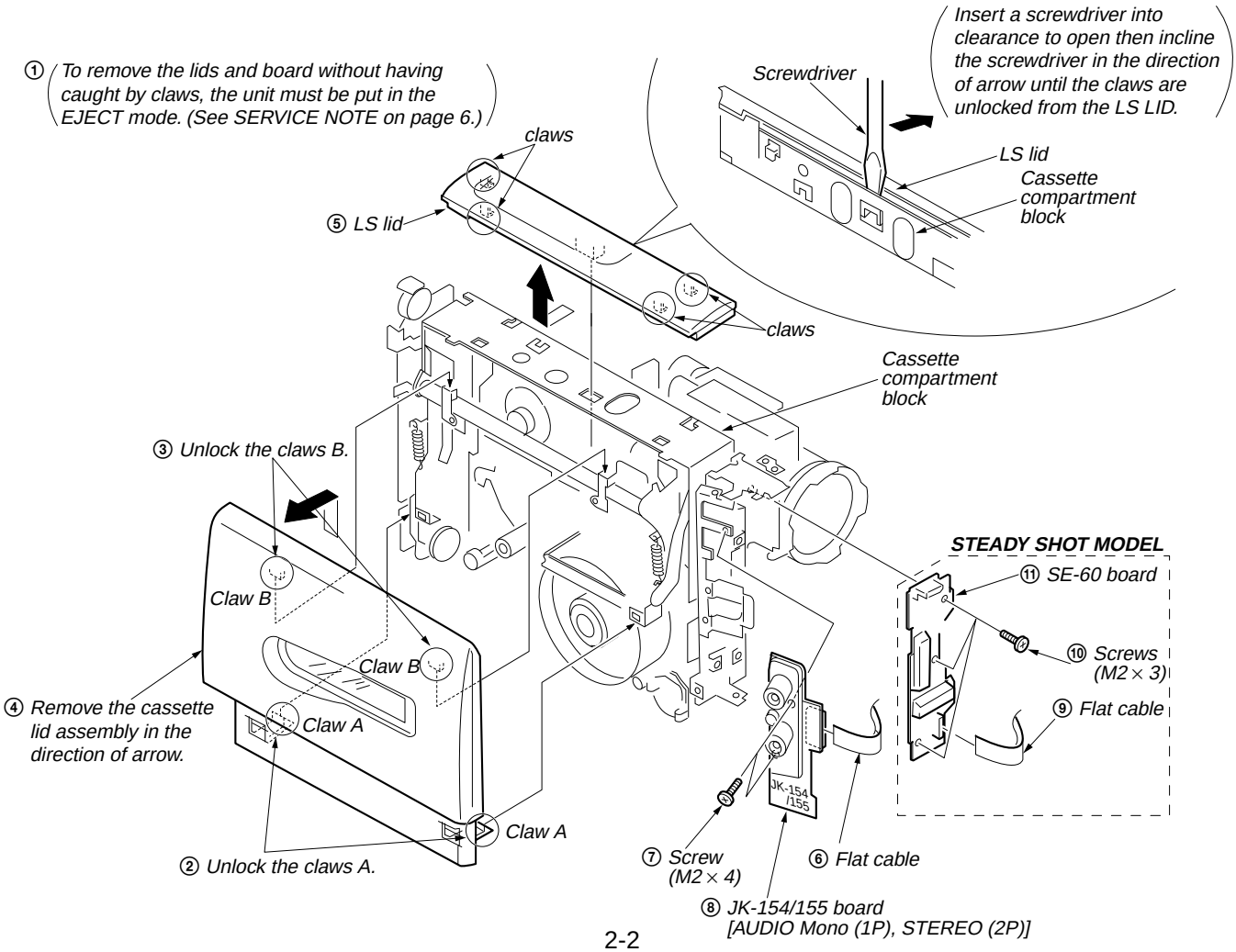

2-4. REMOVAL OF DD-94 BOARD

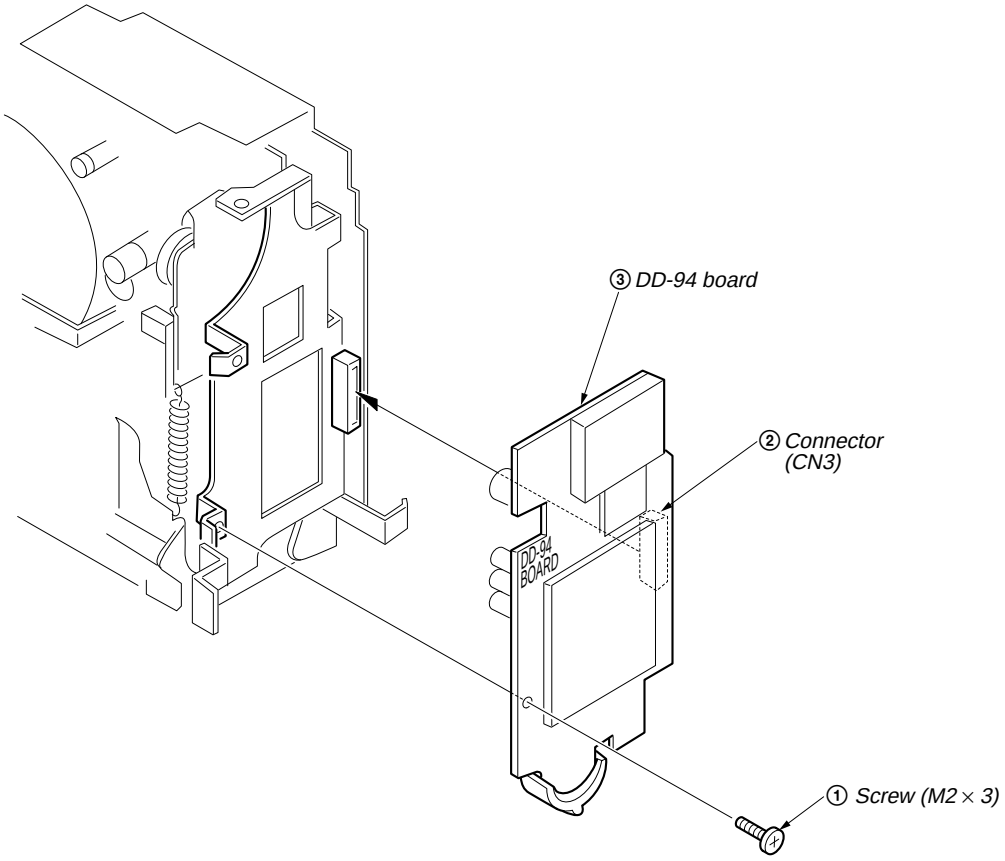

2-5. REMOVAL OF ZOOM LENS, CD-164/165 and IR-28 BOARD

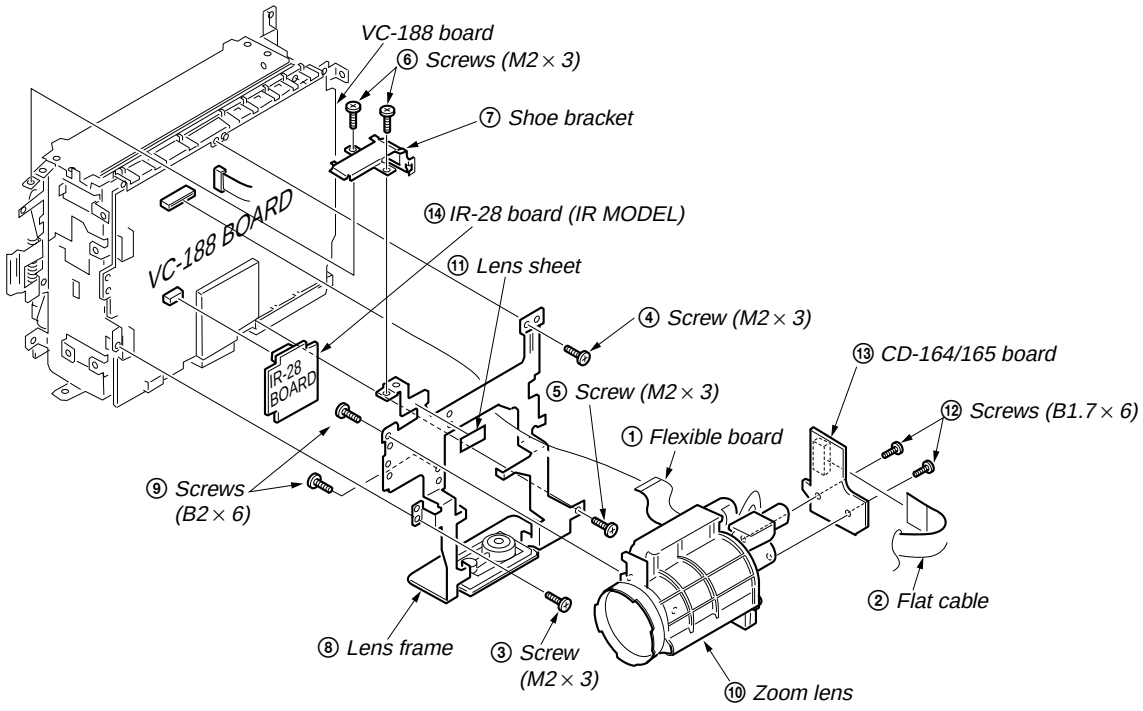

2-6. REMOVAL OF VC-188 BOARD

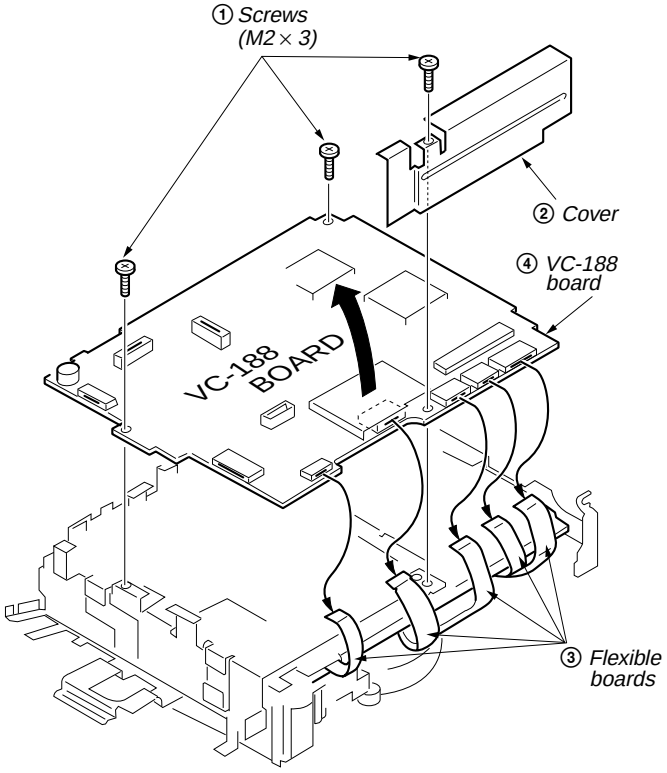

2-7. REMOVAL OF CF-45/46 BOARD

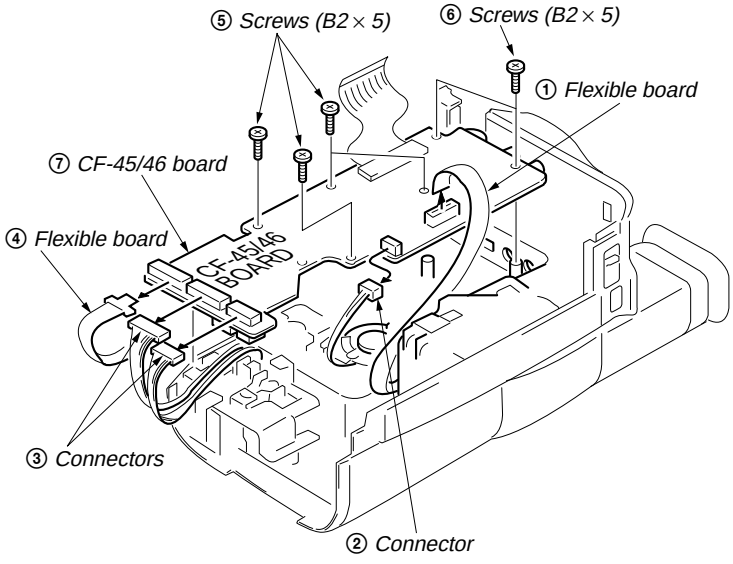

Note: *When attaching the CF-45/46 board, set the switches in the positions as shown.*

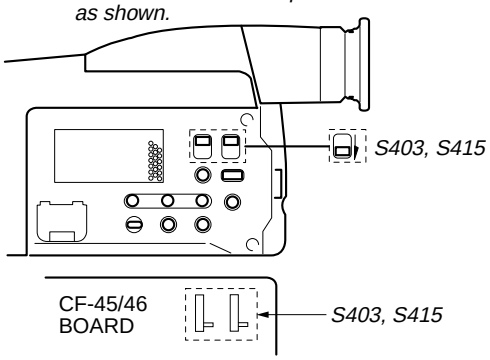

2-8(1). REMOVAL OF EVF BLOCK ASSEMBLY (EXCEPT TRV14E/TRV24E MODEL)

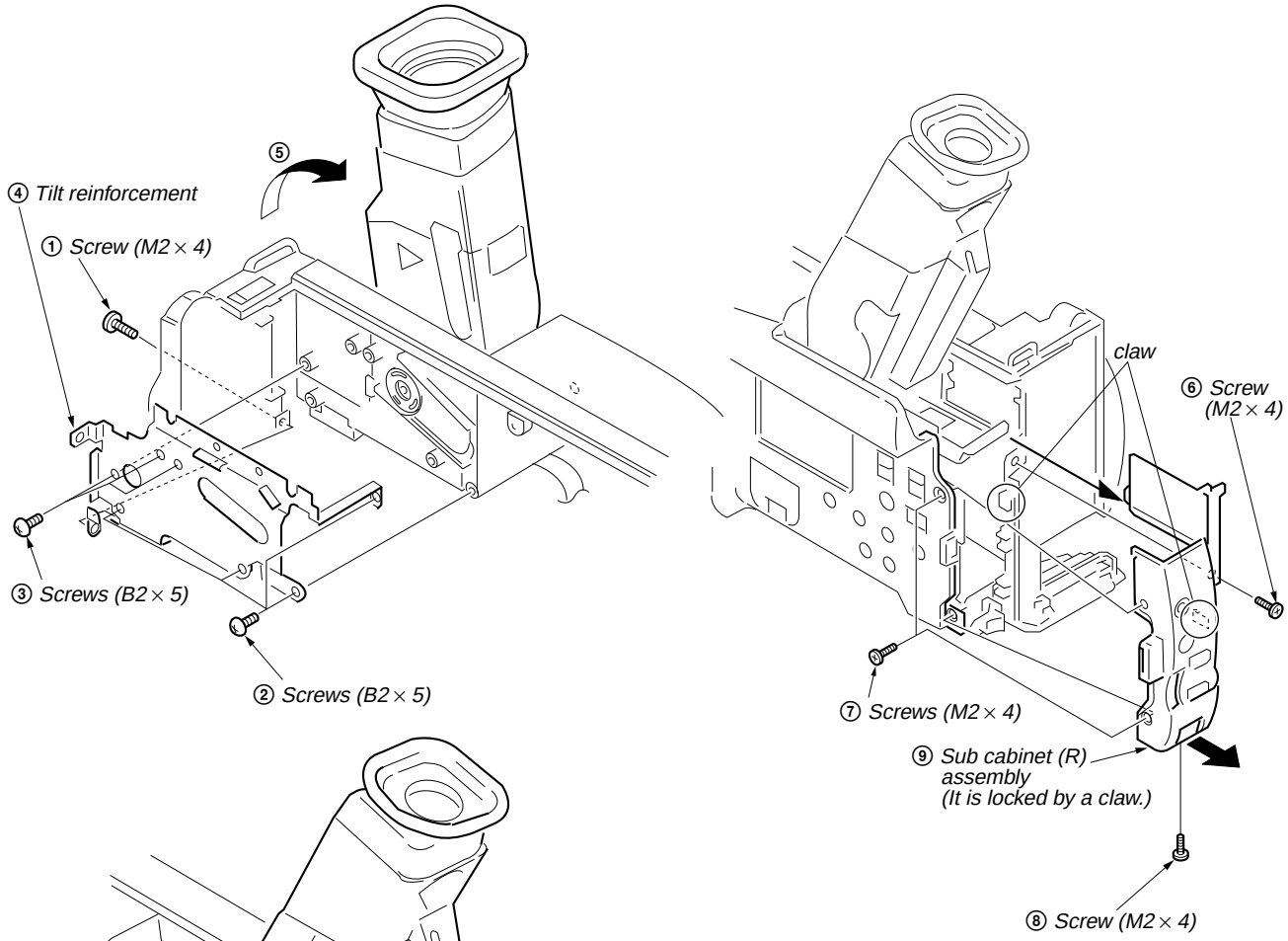

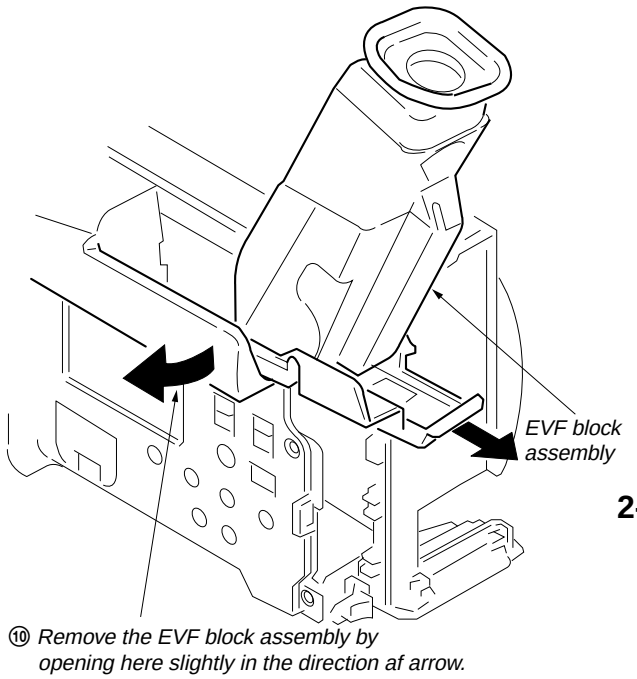

2-8(2). REMOVAL OF EVF BLOCK ASSEMBLY (TRV14E/TRV24E MODEL)

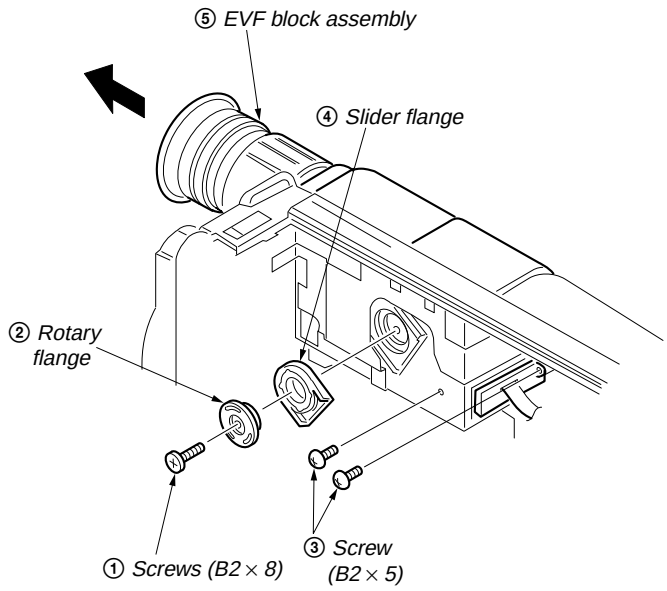

2-9(1). REMOVAL OF EVF CABINET and VF-102 BOARD (TRV14E/TRV24E MODEL)

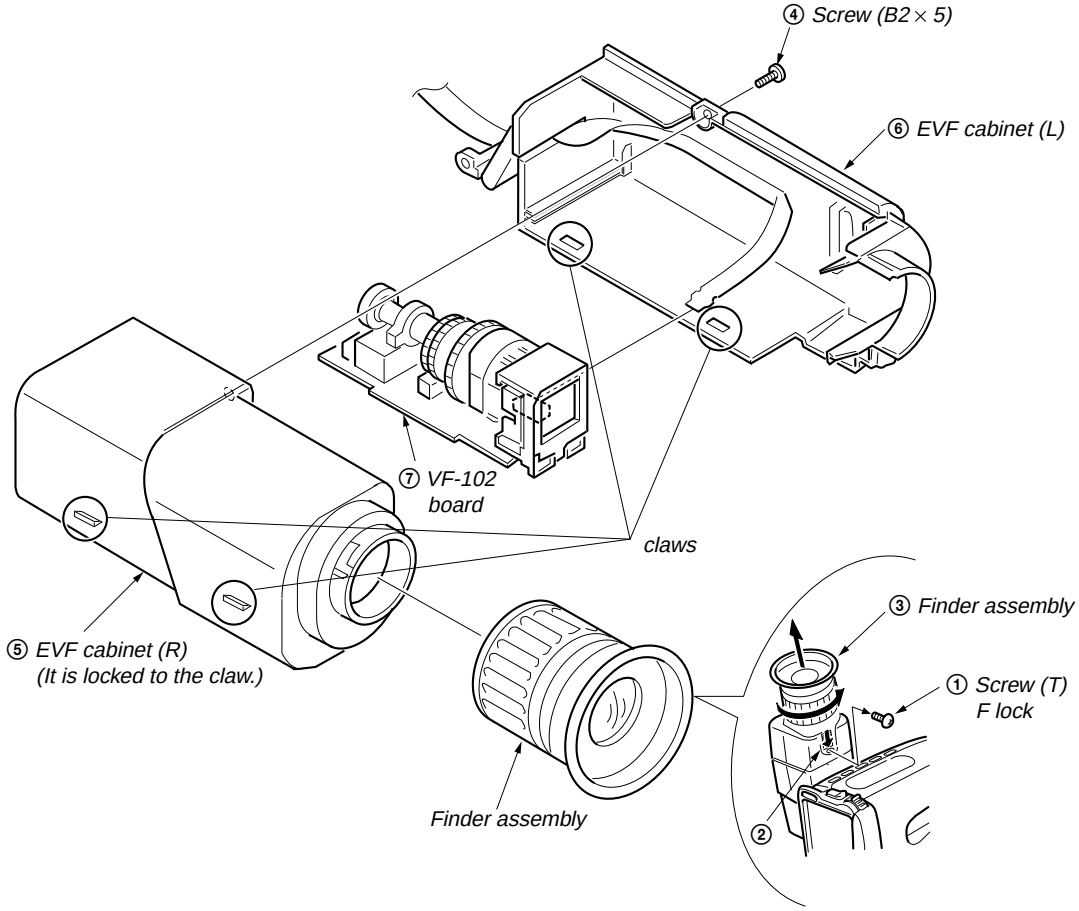

2-9(2). REMOVAL OF EVF CABINET, VF-109, LB-49 and VF-110 BOARD (TRV53 MODEL)

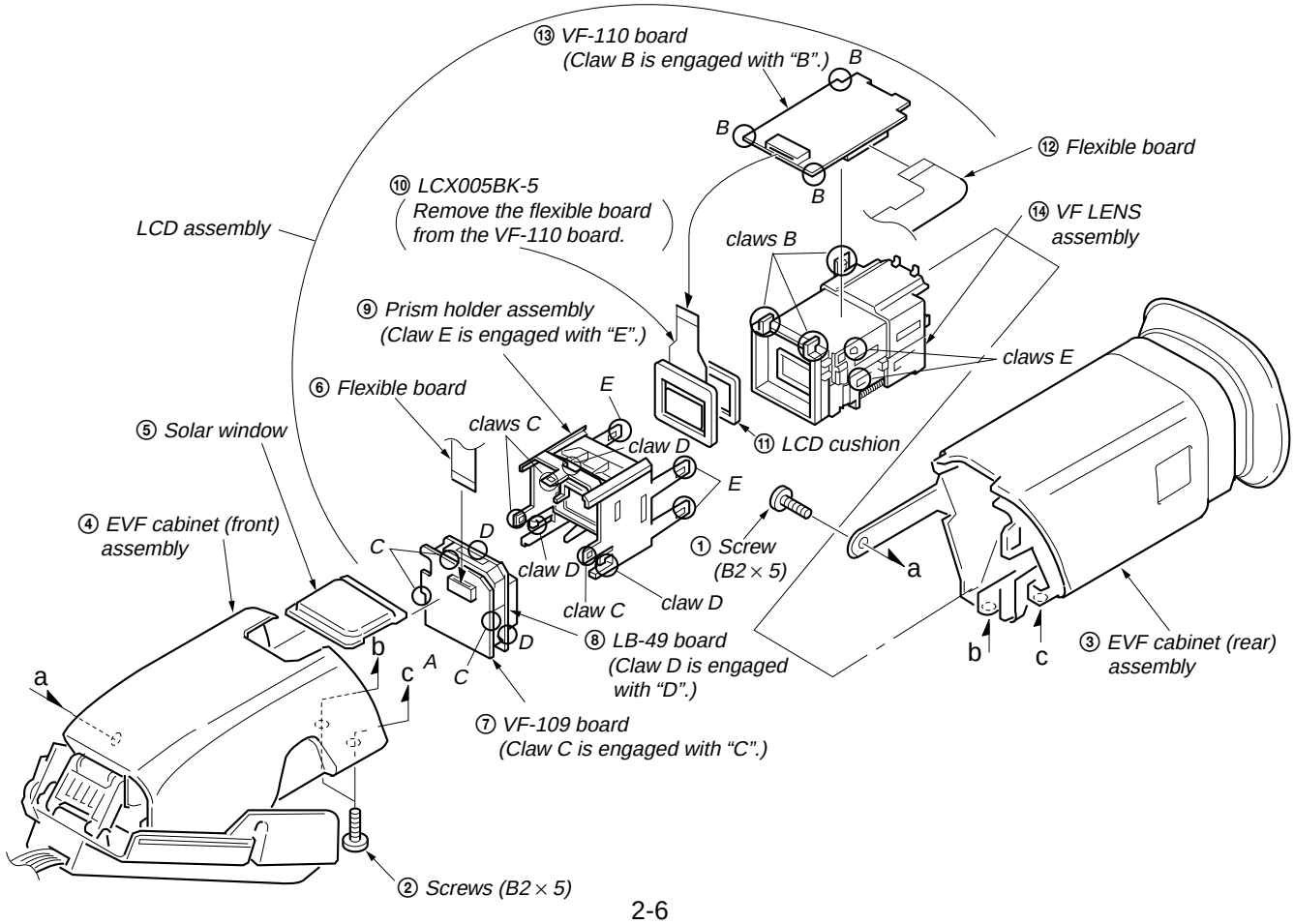

2-9(3). REMOVAL OF EVF CABINET and VF-102 BOARD (EXCEPT TRV53/TRV14E/TRV24E MODEL)

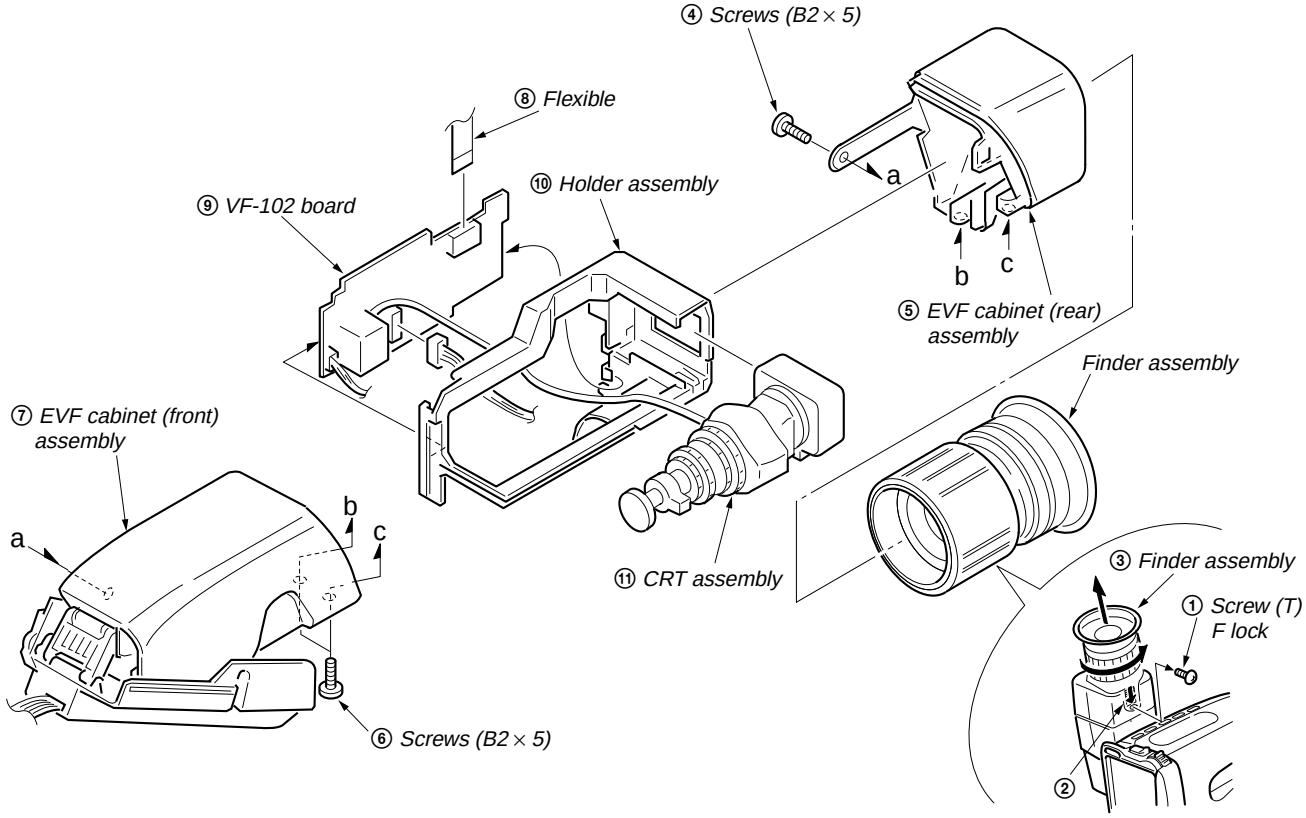

2-10(1). REMOVAL OF P CABINET AND LCD ASSEMBLY (EXCEPT TRV14E/TRV24E MODEL)

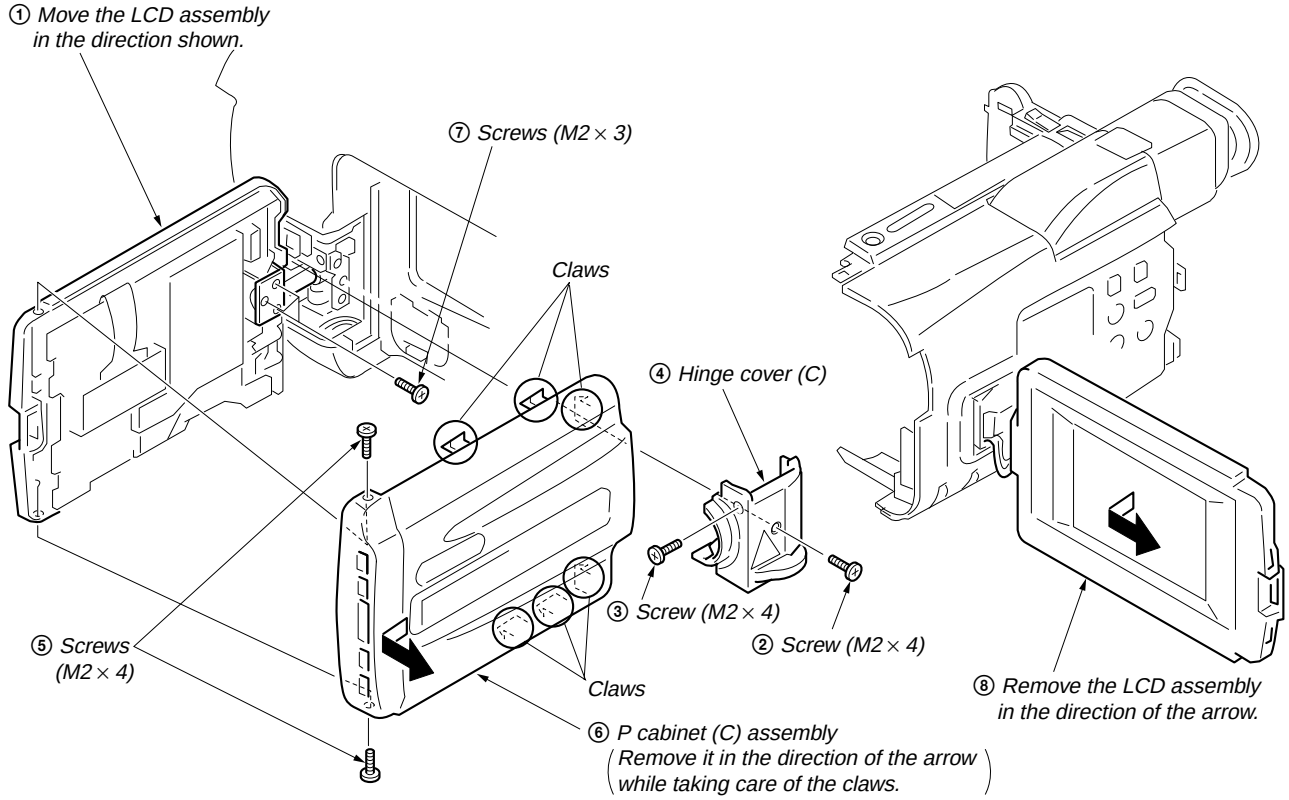

2-10(2). REMOVAL OF P CABINET AND LCD ASSEMBLY (TRV14E/TRV24E MODEL)

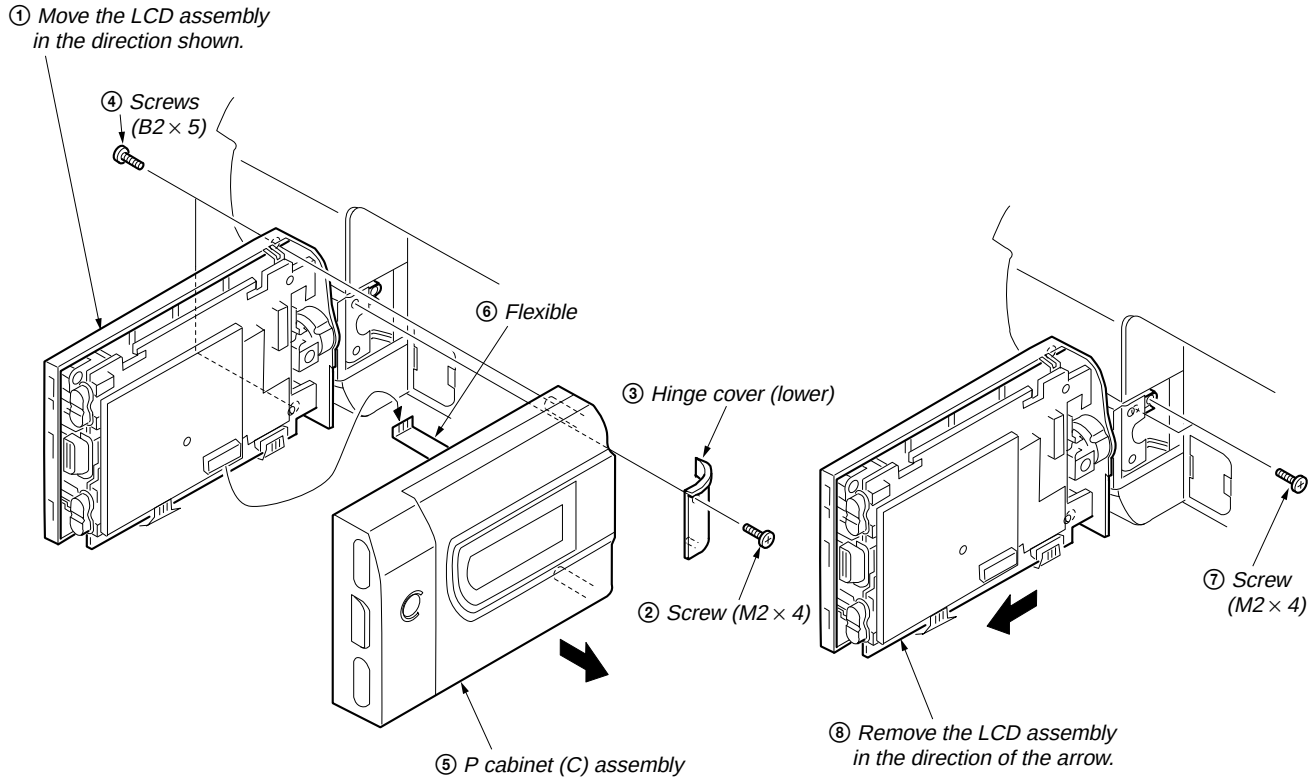

2-11(1). REMOVAL OF PD-76/77 BOARD (EXCEPT TRV14E/TRV24E MODEL)

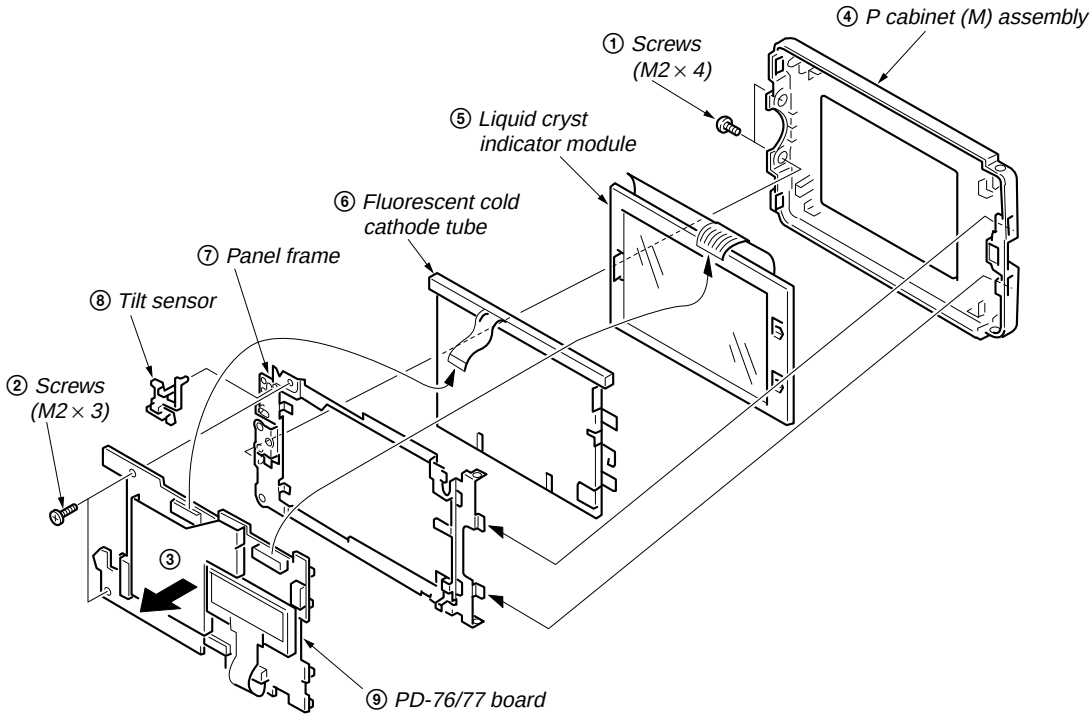

2-11(2). REMOVAL OF SD-24/25 AND PD-74/75 BOARD (TRV14E/TRV24E MODEL)

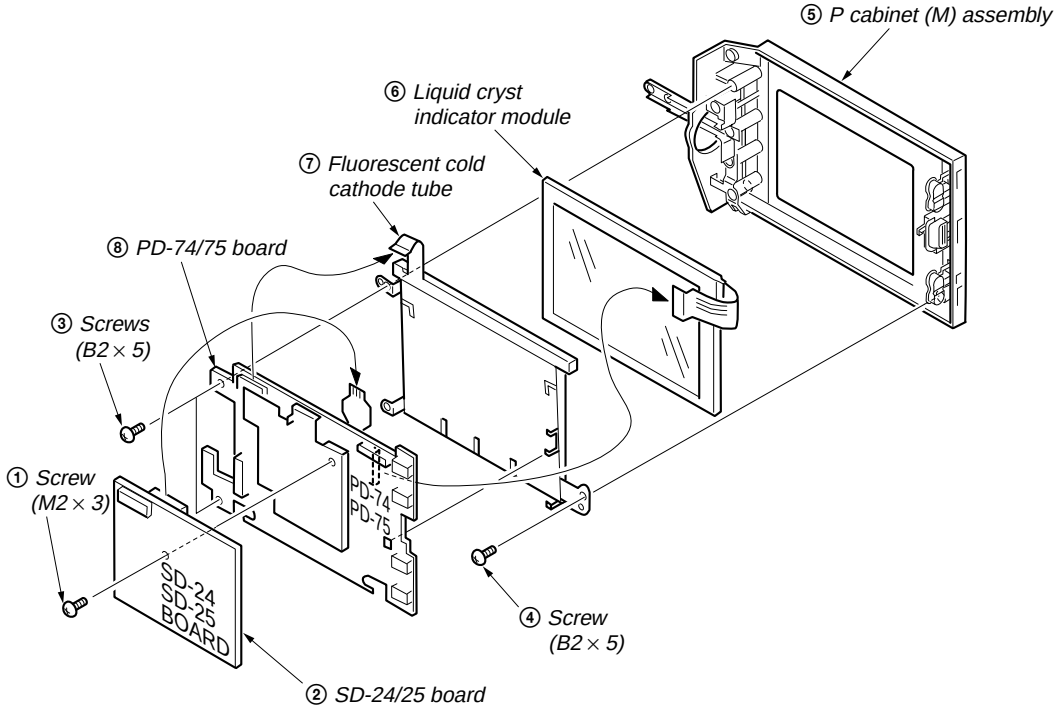

2-12. INTERNAL VIEWS

— LEFT SIDE —

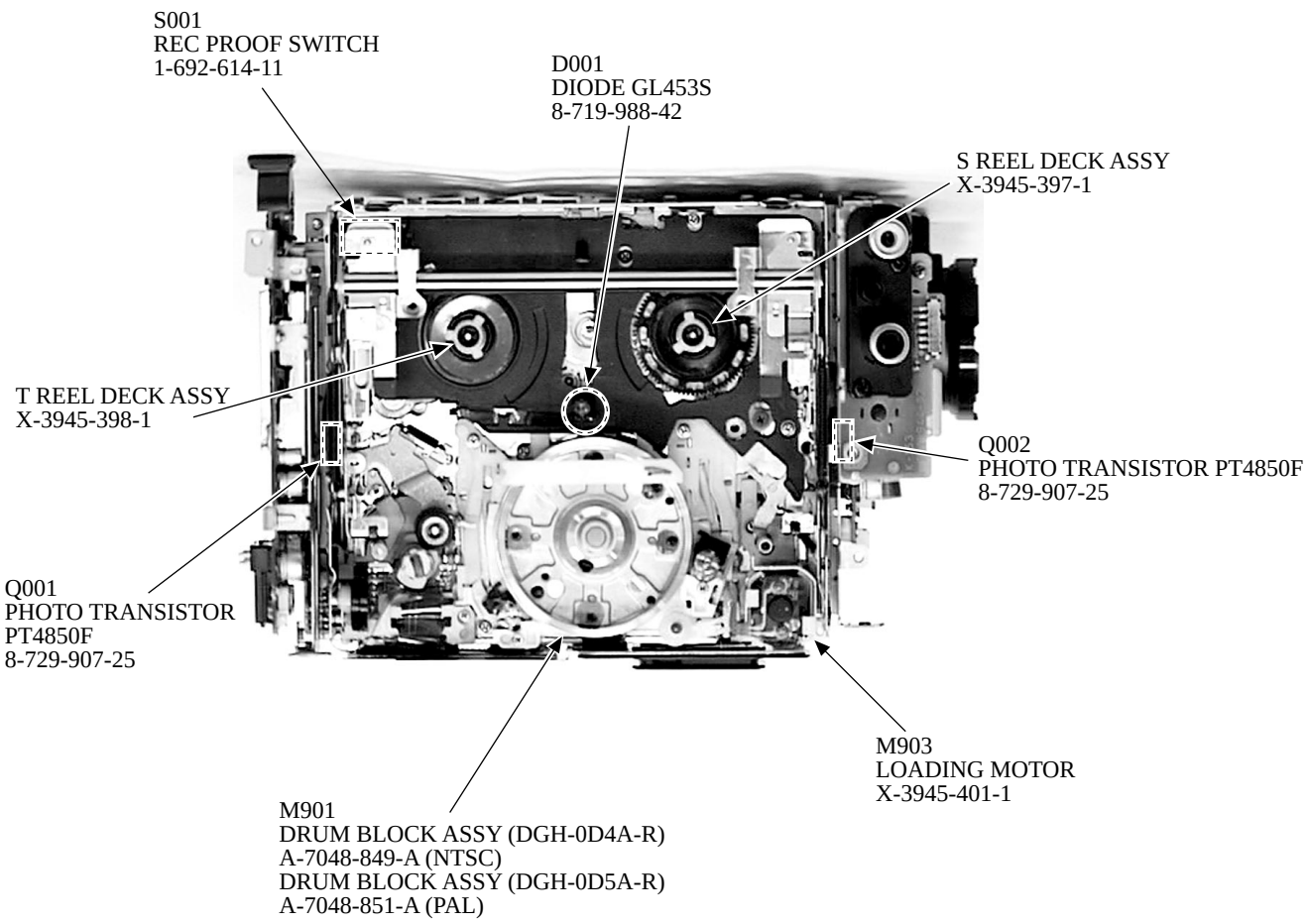

— RIGHT SIDE —

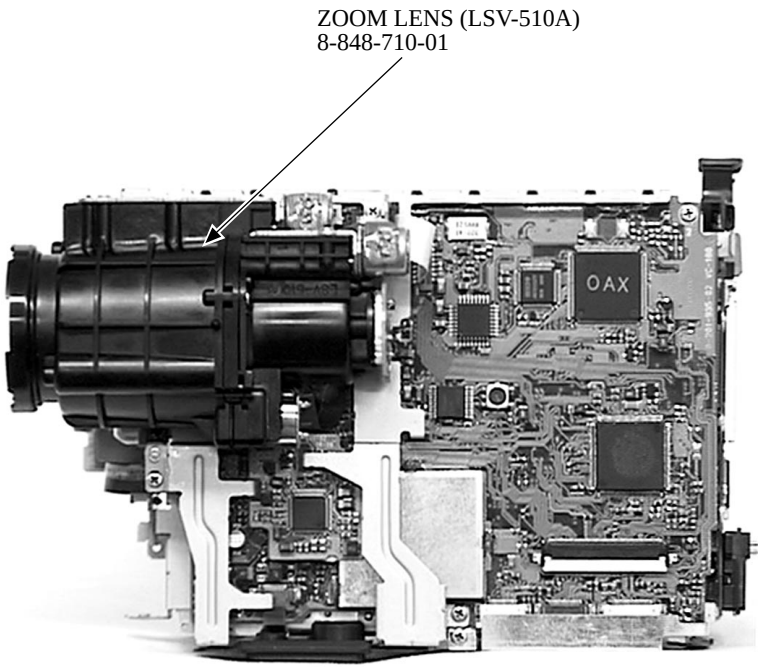

2-13. CIRCUIT BOARDS LOCATION

EXCEPT TRV14E/TRV24E MODEL

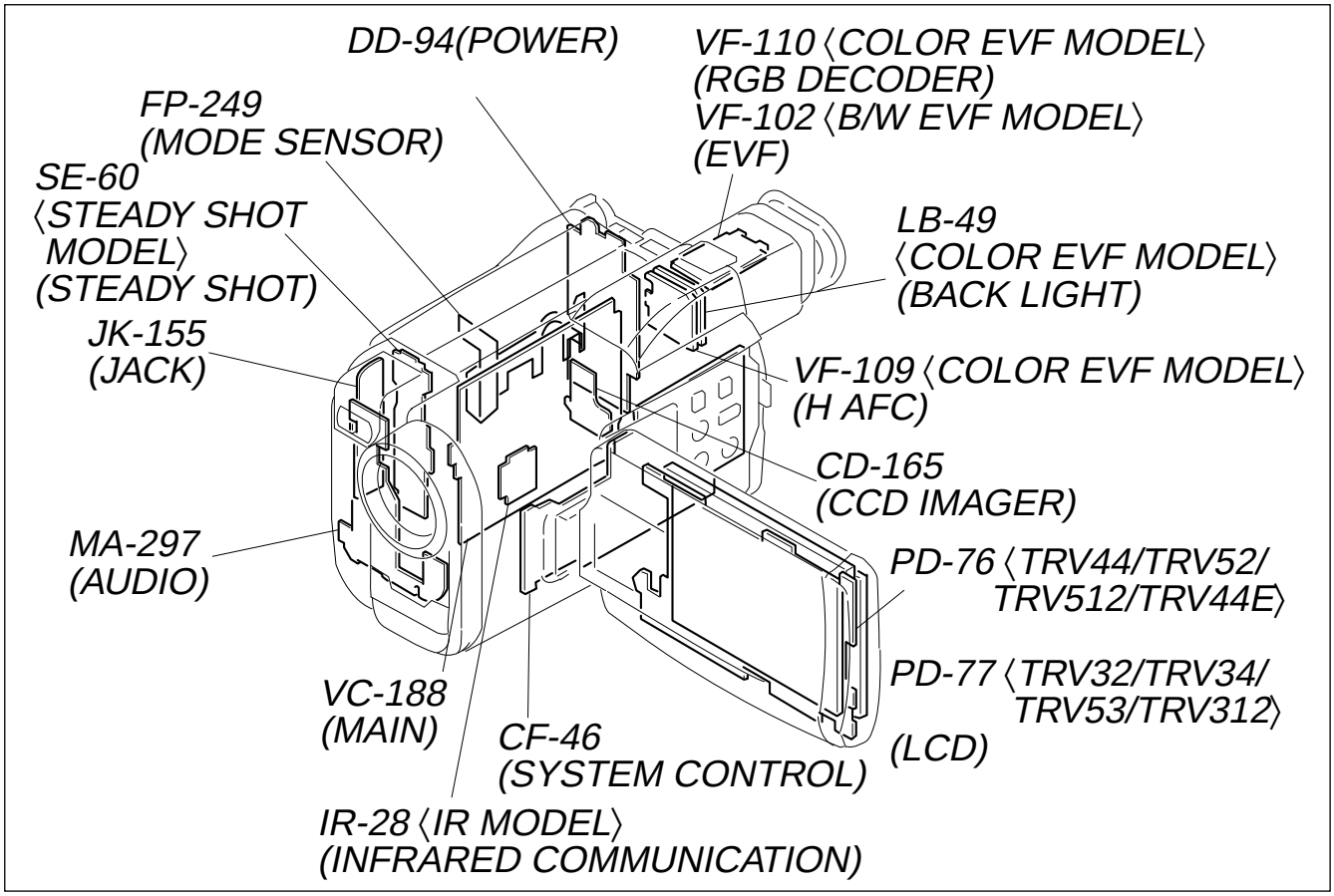

TRV14E/TRV24E MODEL

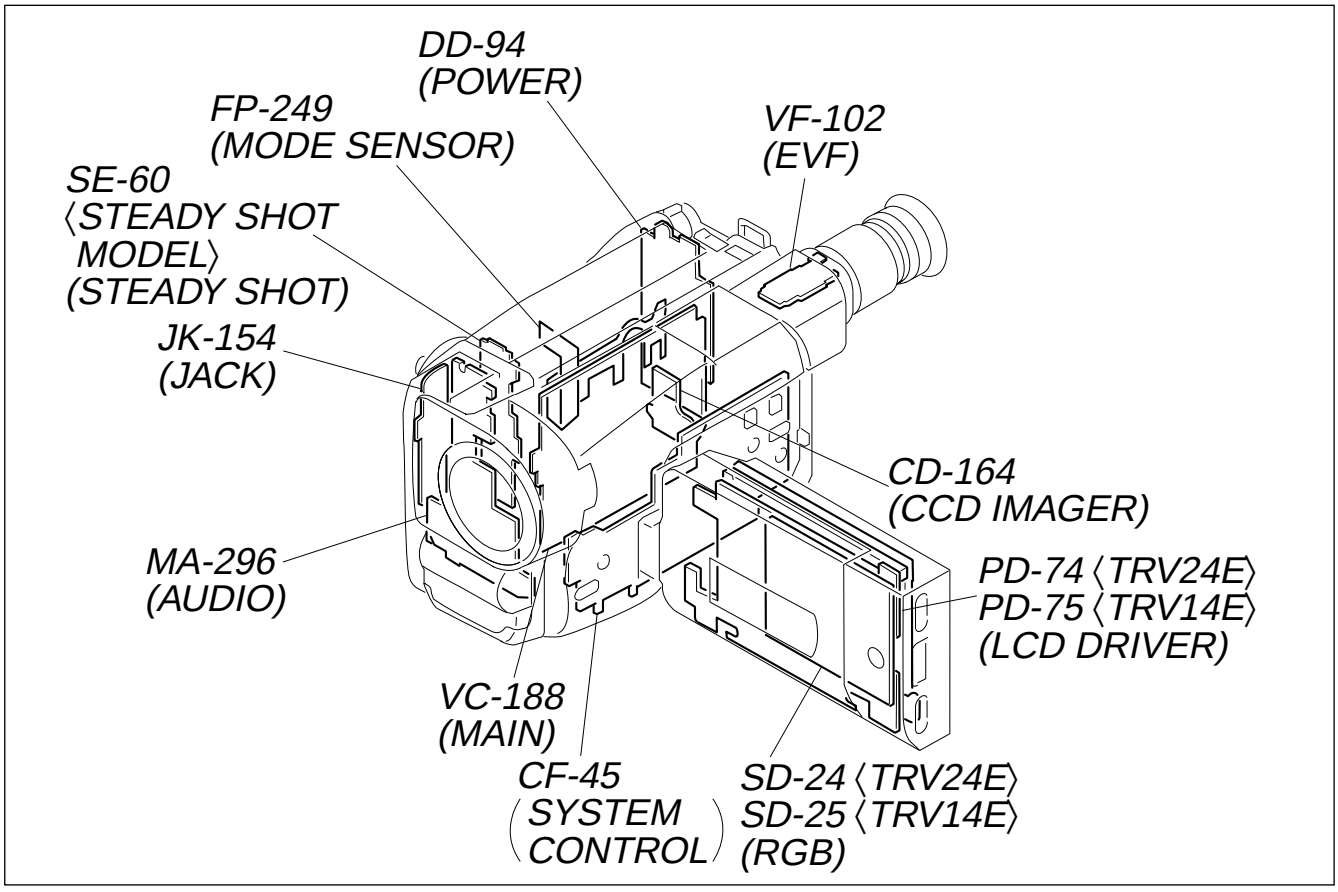

SECTION 3
BLOCK DIAGRAMS

3-1. OVERALL (1) BLOCK DIAGRAM

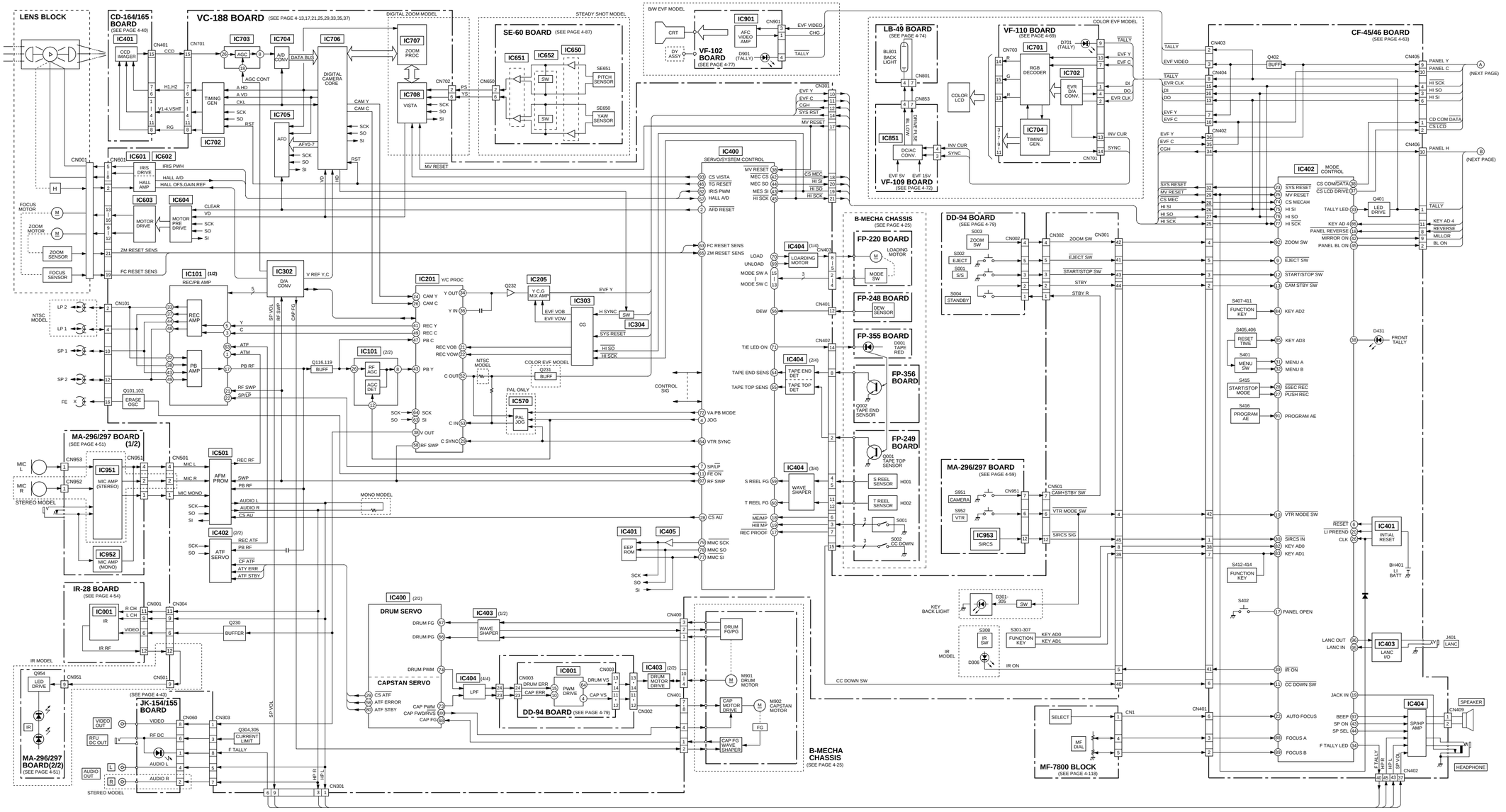

3-2. OVERALL (2) BLOCK DIAGRAM

2.5 inch LCD (TYPE 1)
TRV24E MODEL

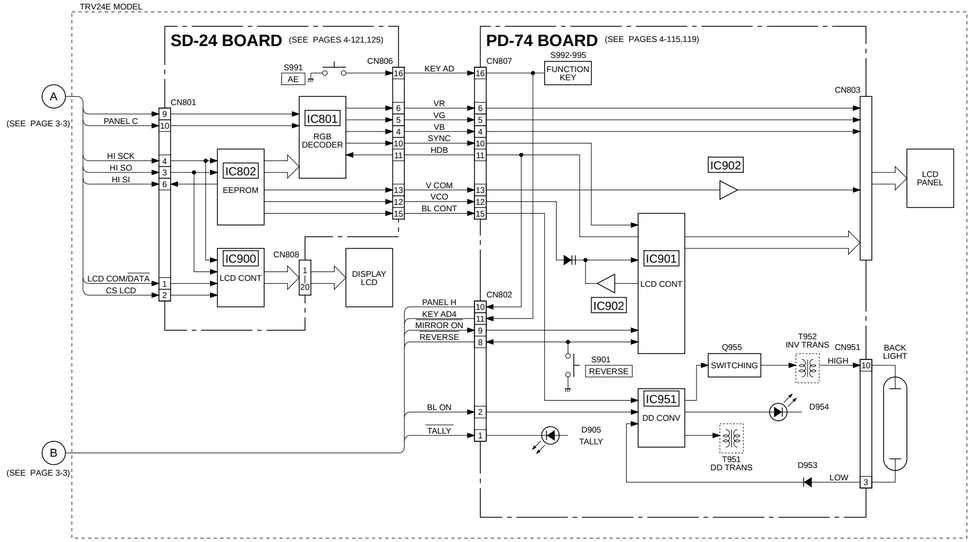

3.5 inch LCD (TYPE 4)
TRV44/TRV52/TRV512/TRV44E MODEL

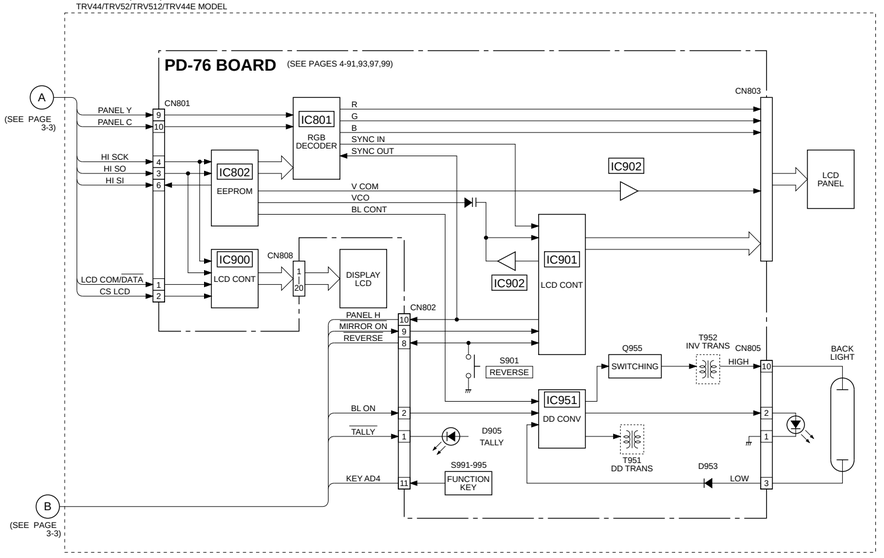

2.5 inch LCD (TYPE 2)
TRV14E MODEL

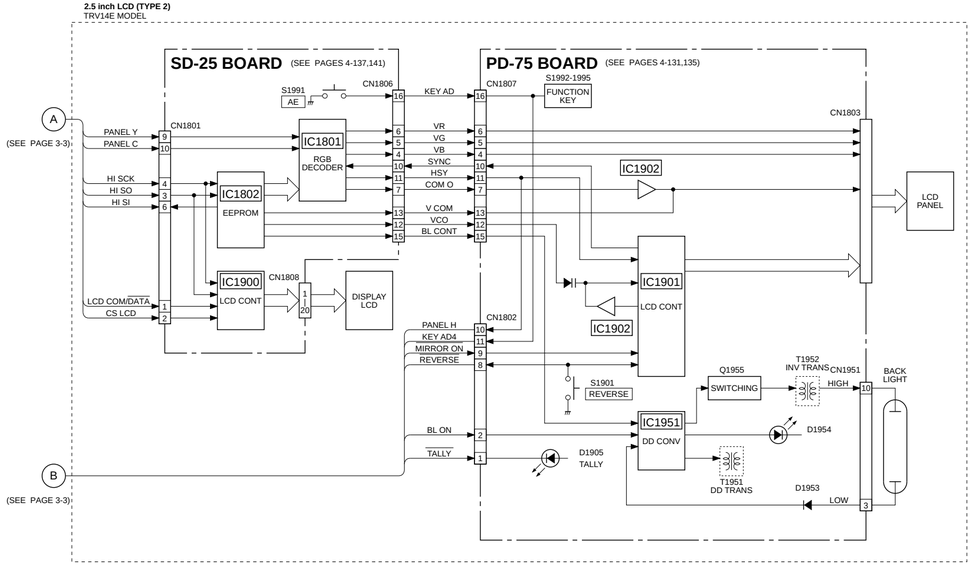

3.0 inch LCD (TYPE 3)
TRV32/TRV34/TRV53/TRV312 MODEL

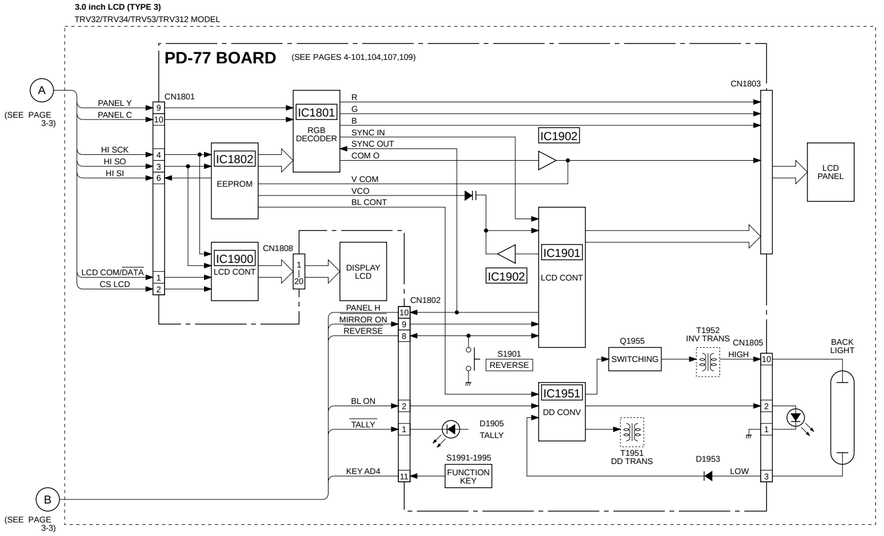

3-3. CAMERA BLOCK DIAGRAM

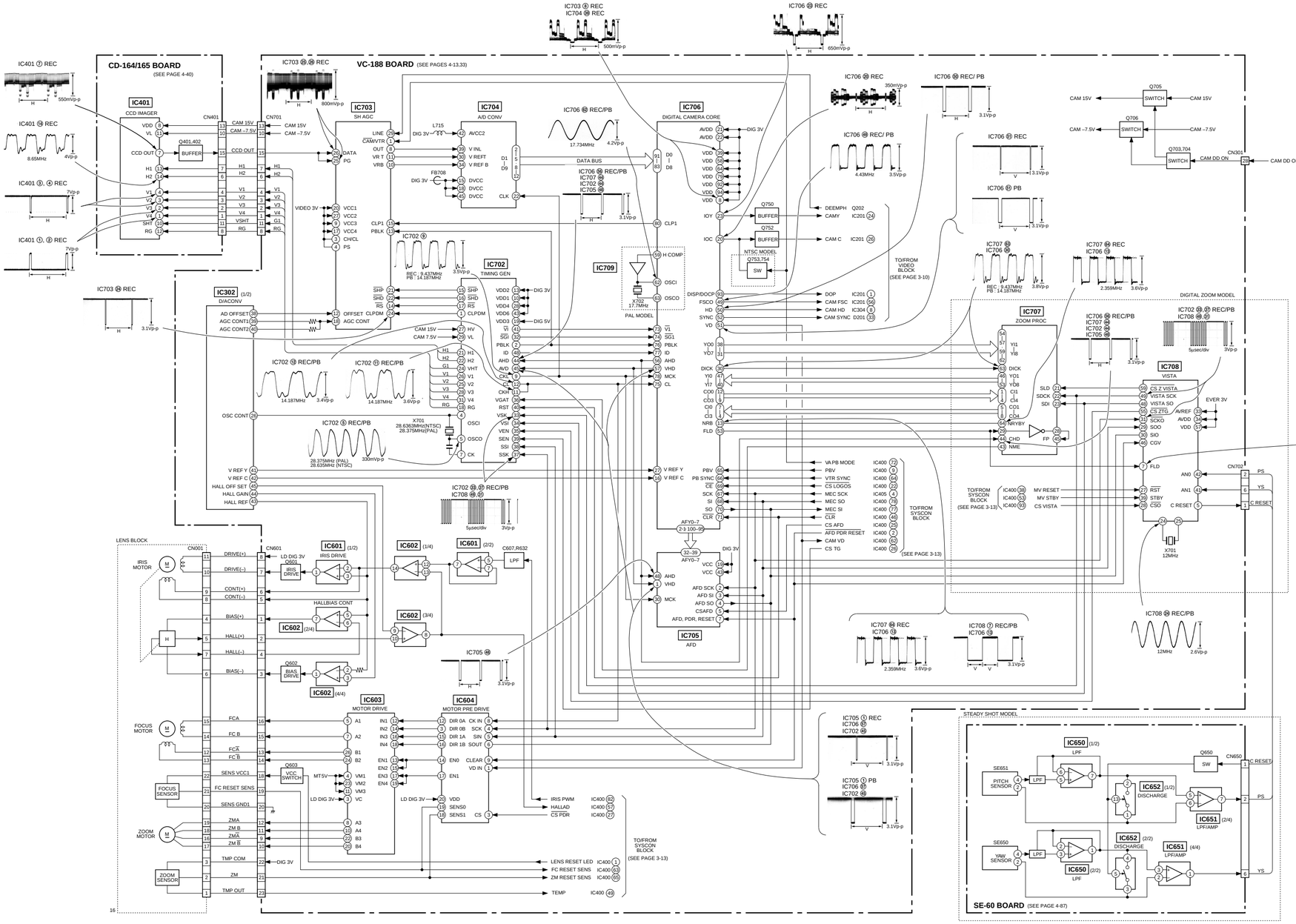

3-4. VIDEO/AUDIO BLOCK DIAGRAM

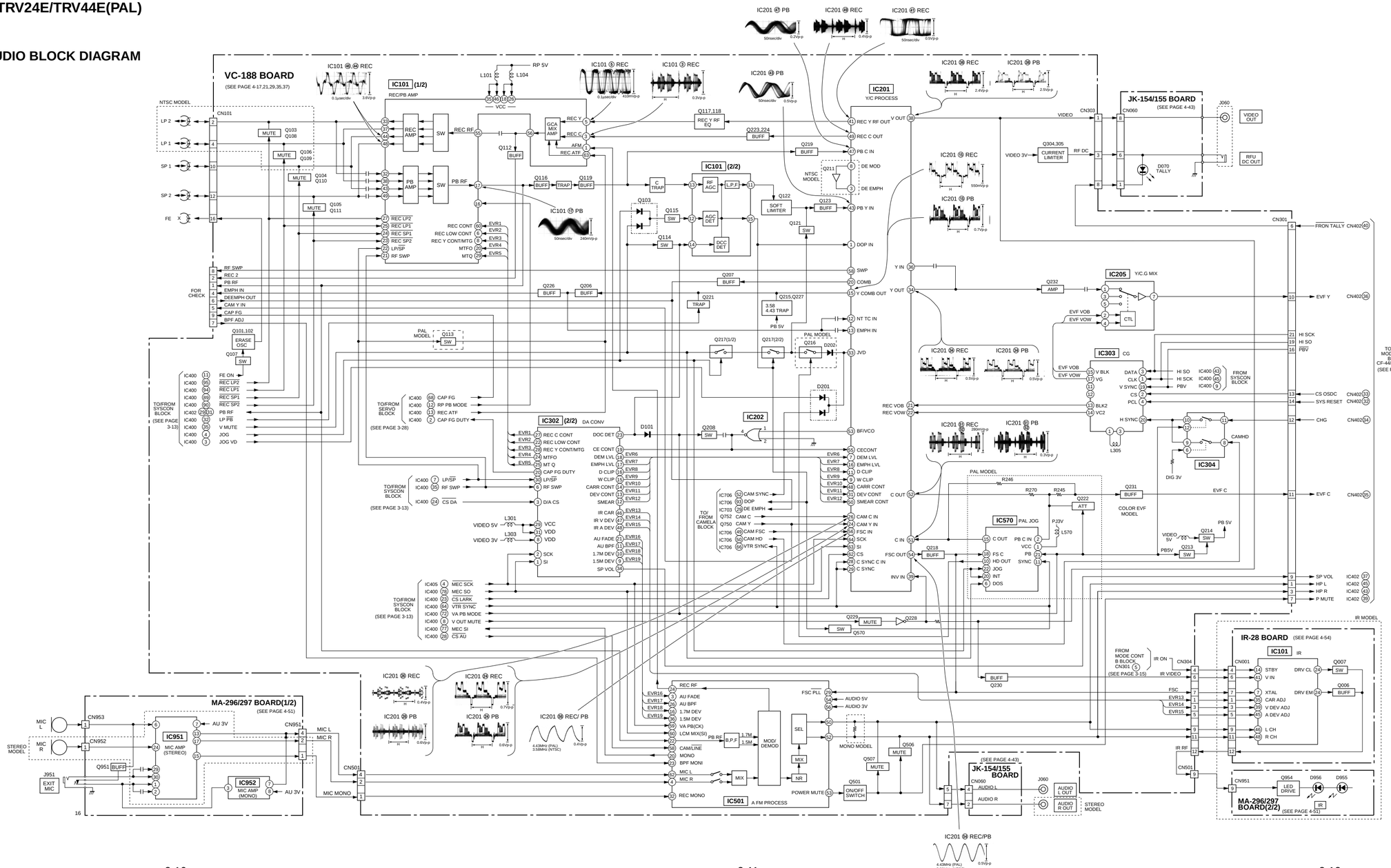

3-5. SYSTEM CONTROL BLOCK DIAGRAM

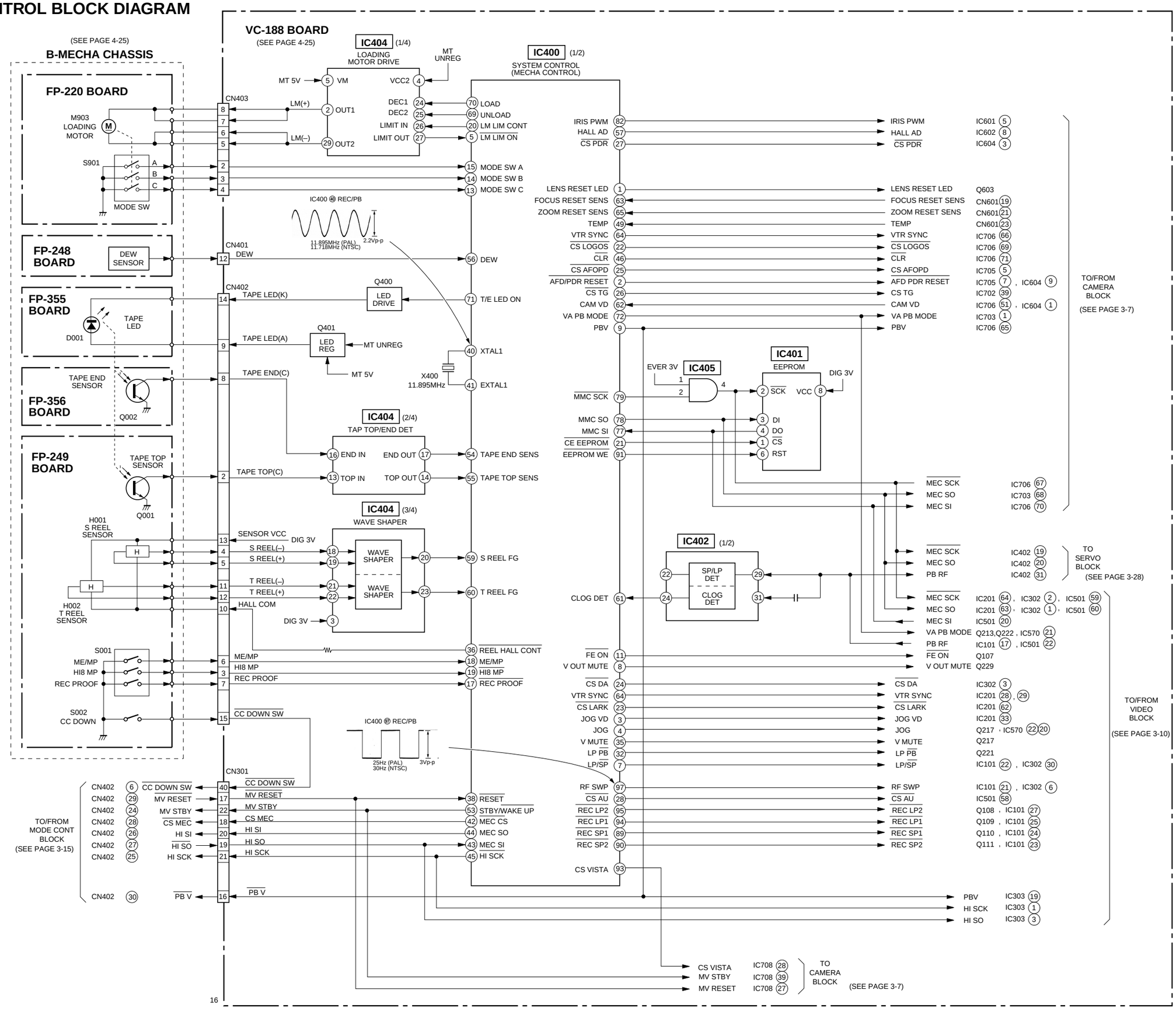

3-6. MODE CONTROL BLOCK DIAGRAM

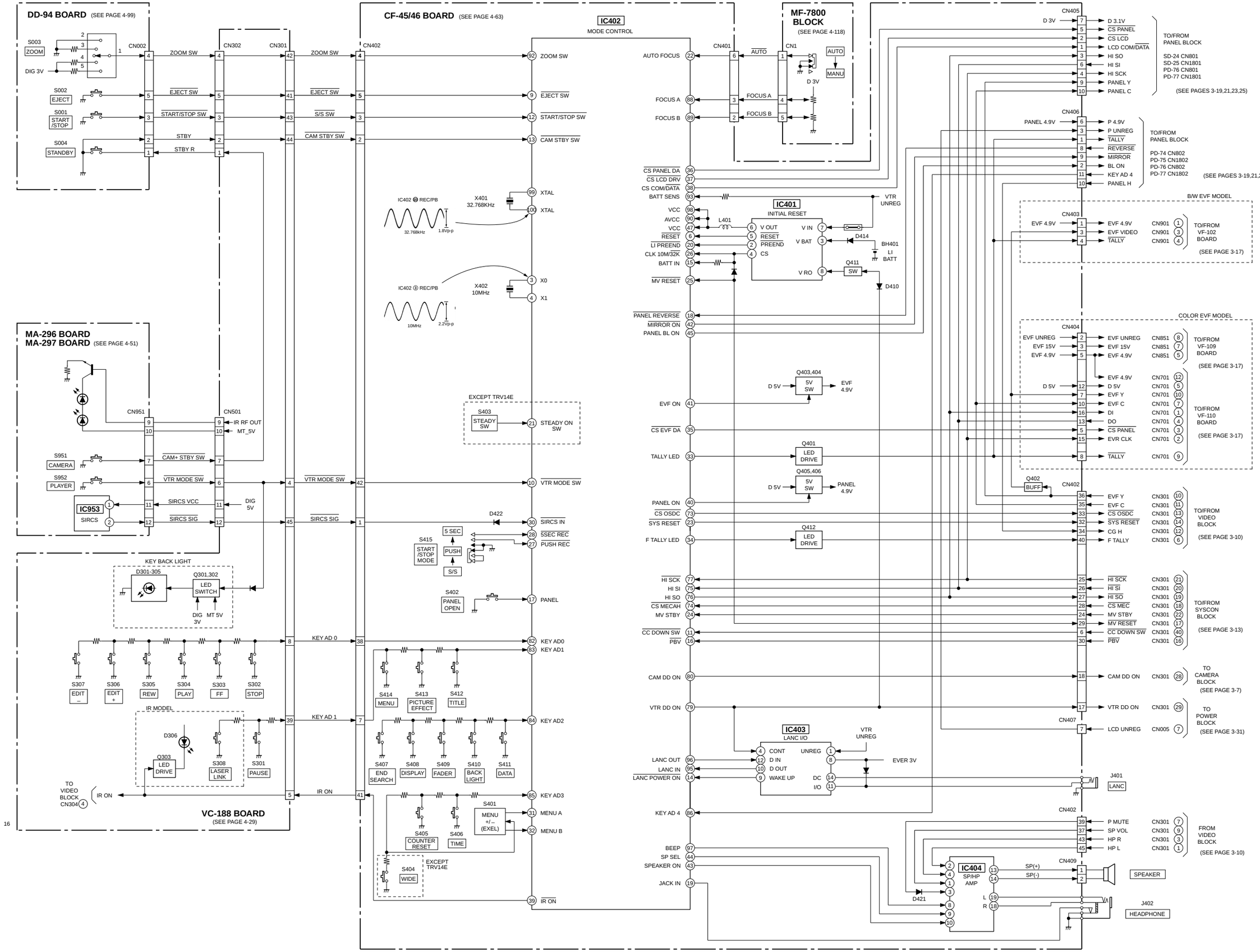

3-7. EVF BLOCK DIAGRAM

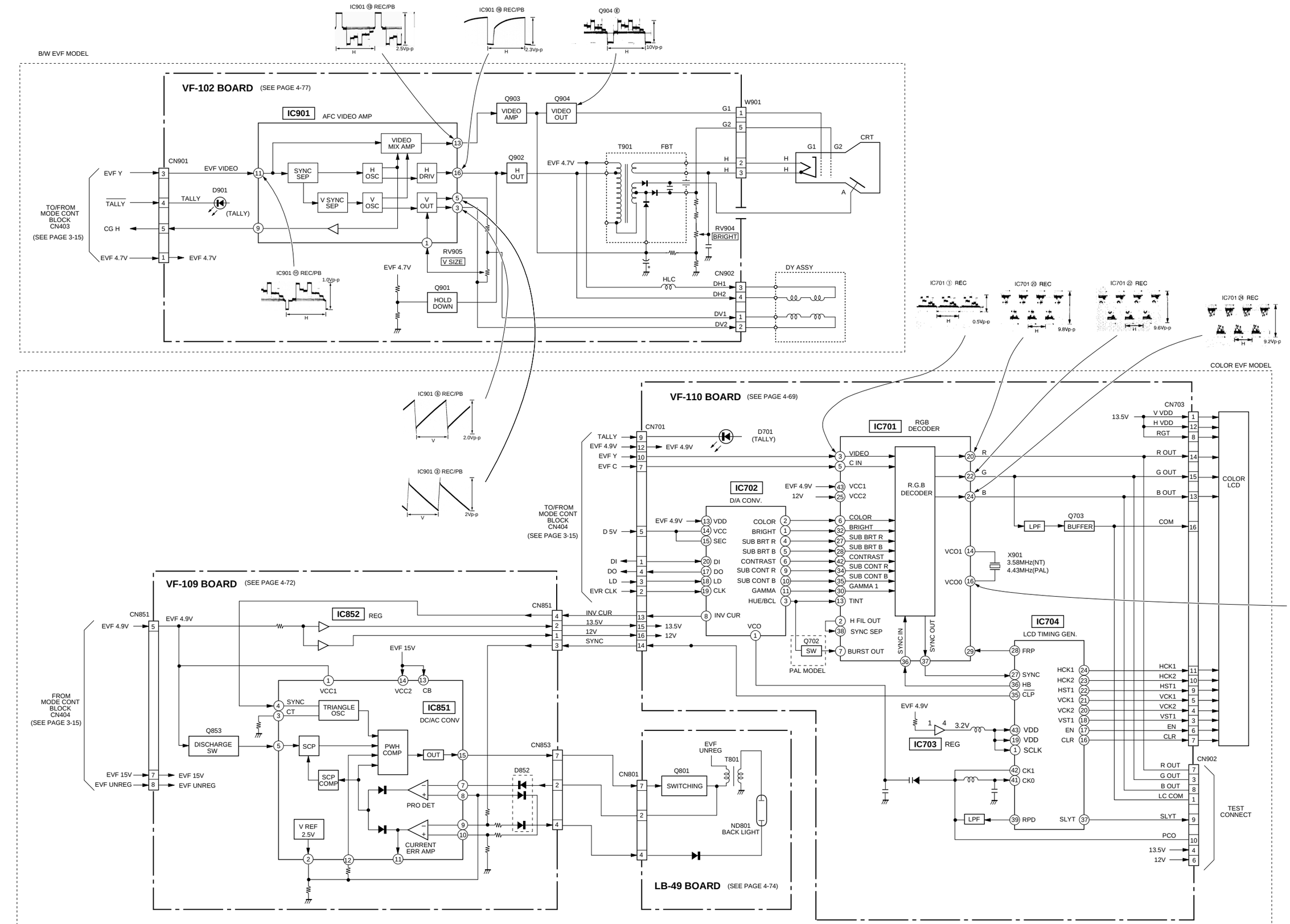

3-8. LCD (TYPE 4) BLOCK DIAGRAM

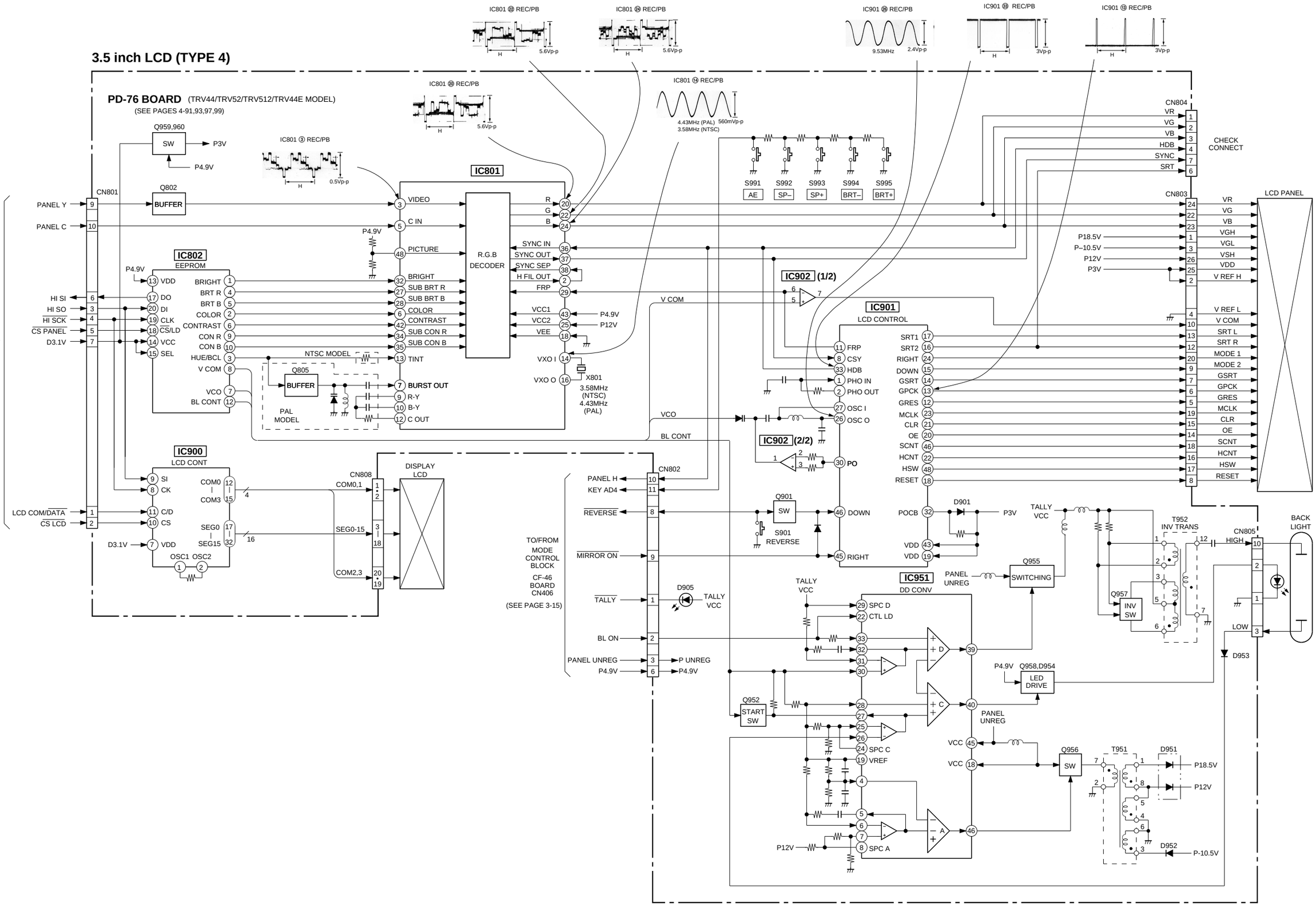

3-9. LCD (TYPE 3) BLOCK DIAGRAM

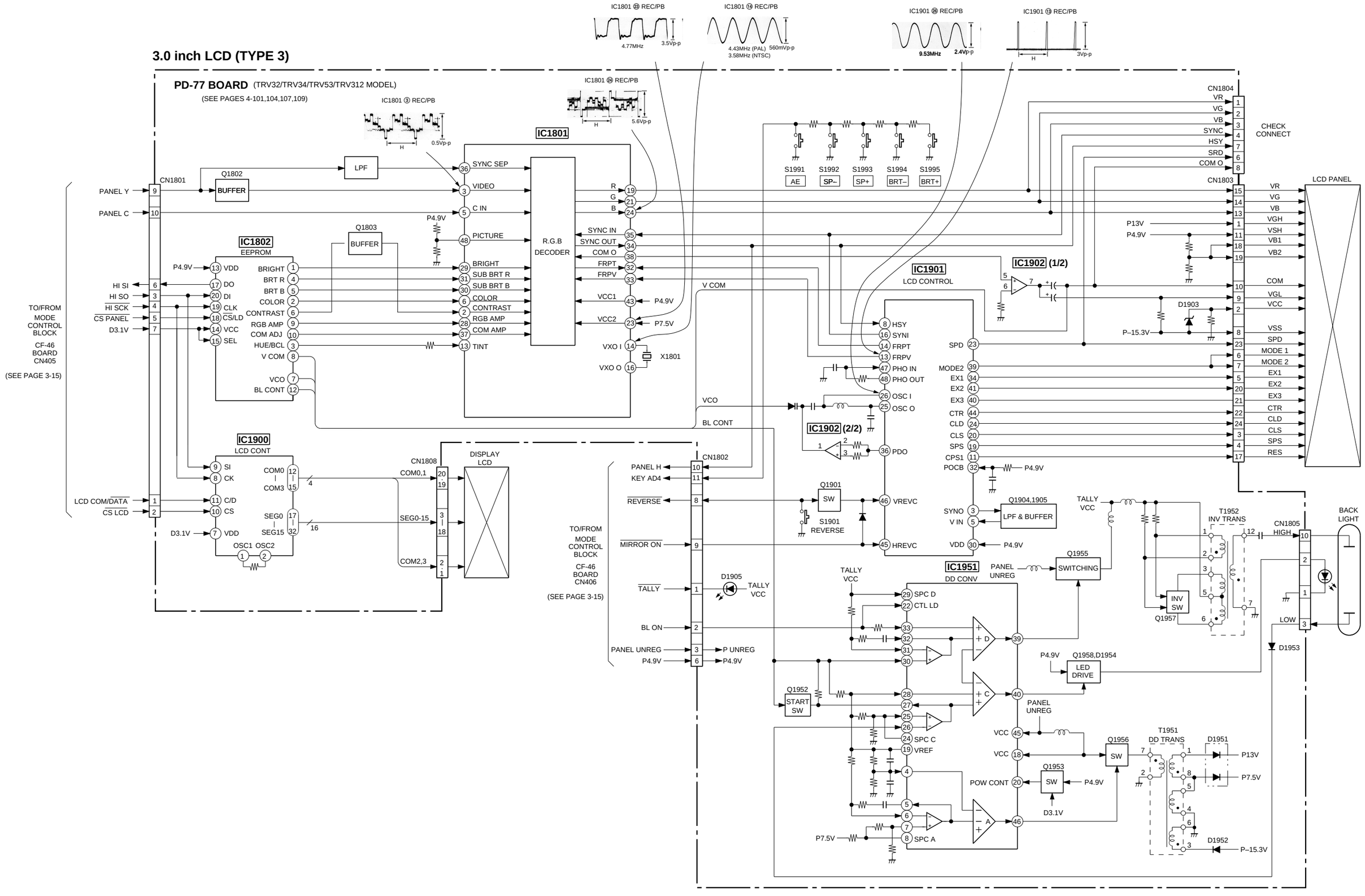

3-10. LCD (TYPE 1) BLOCK DIAGRAM

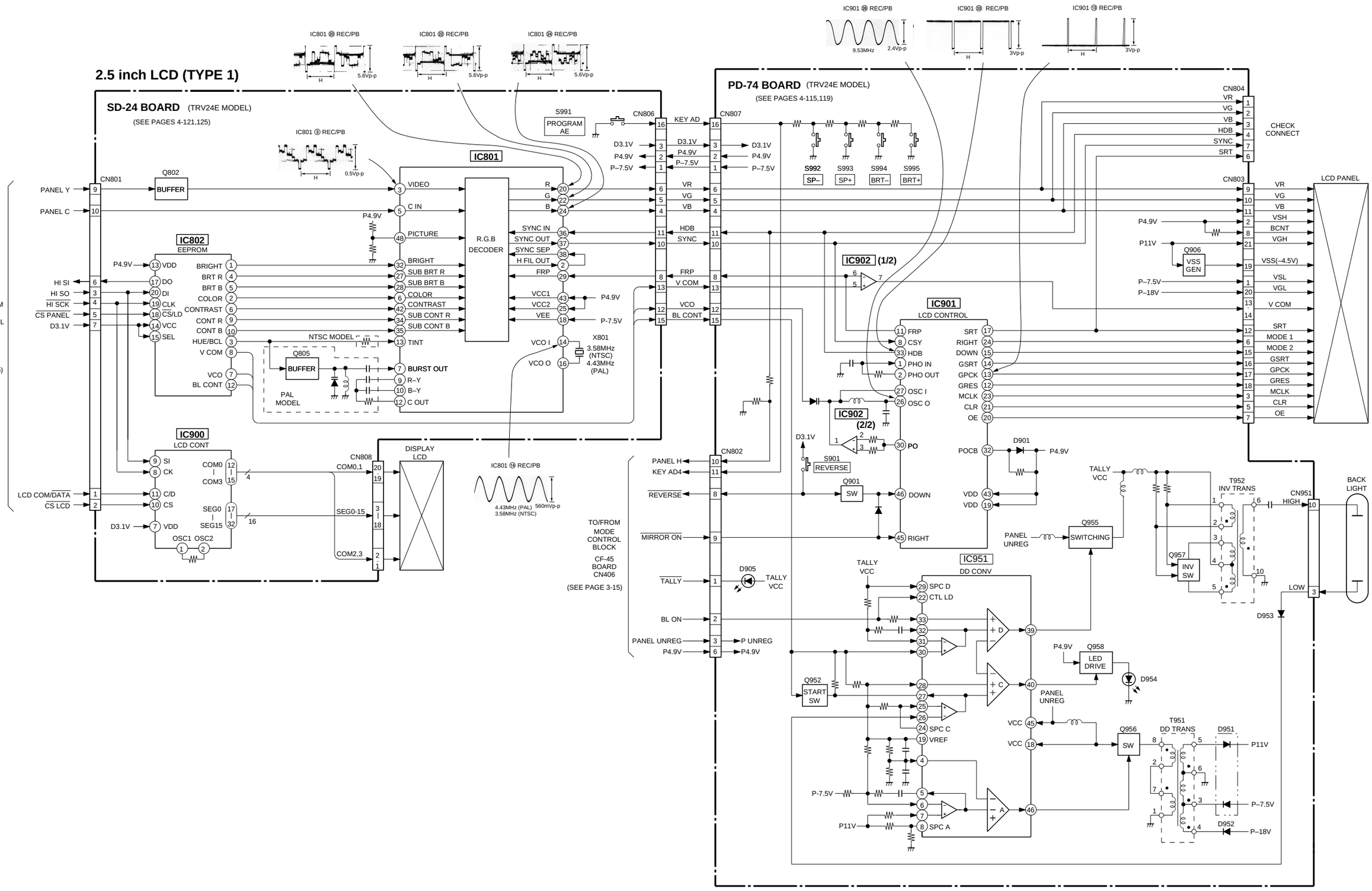

3-11. LCD (TYPE 2) BLOCK DIAGRAM

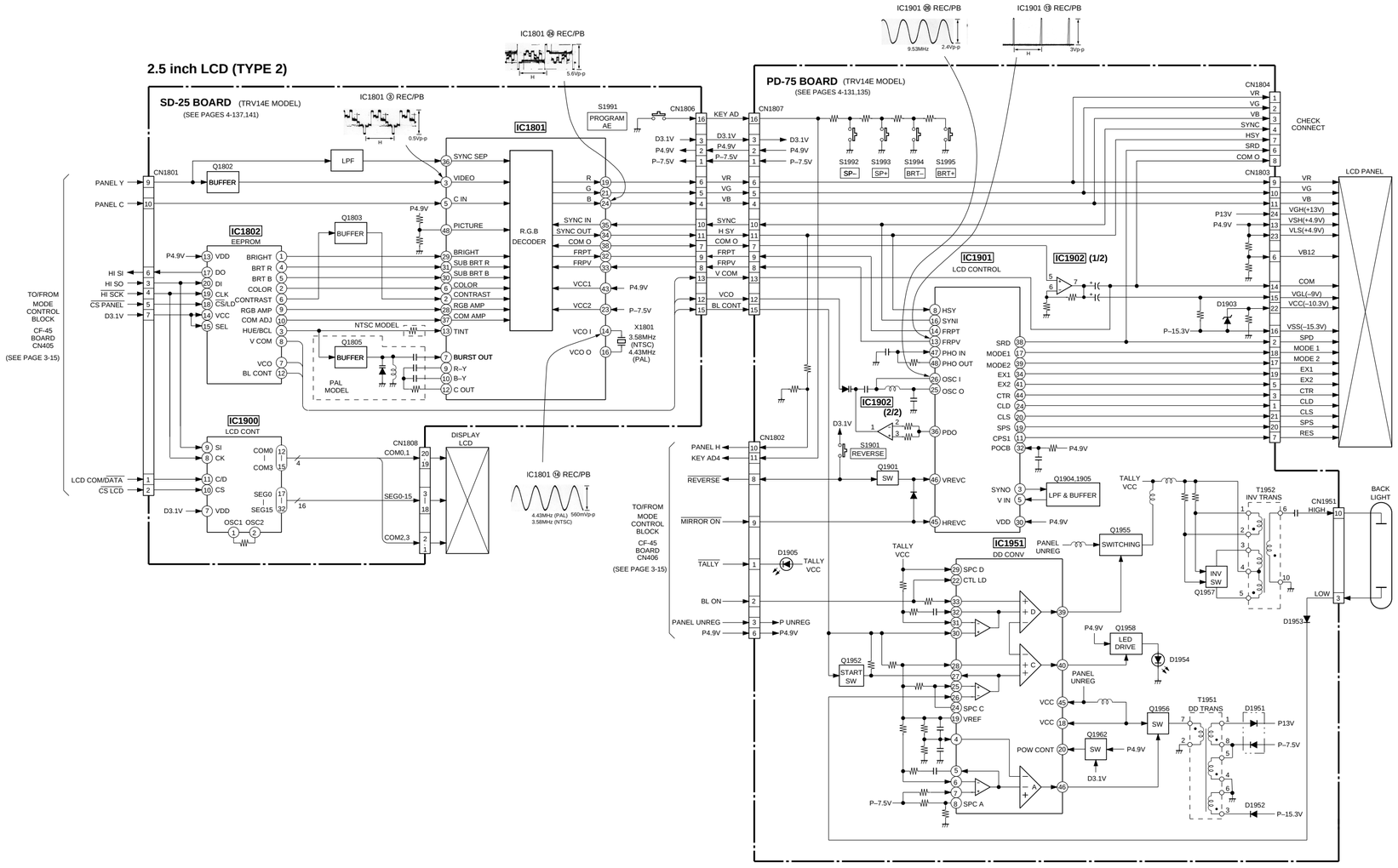

3-12. SERVO BLOCK DIAGRAM

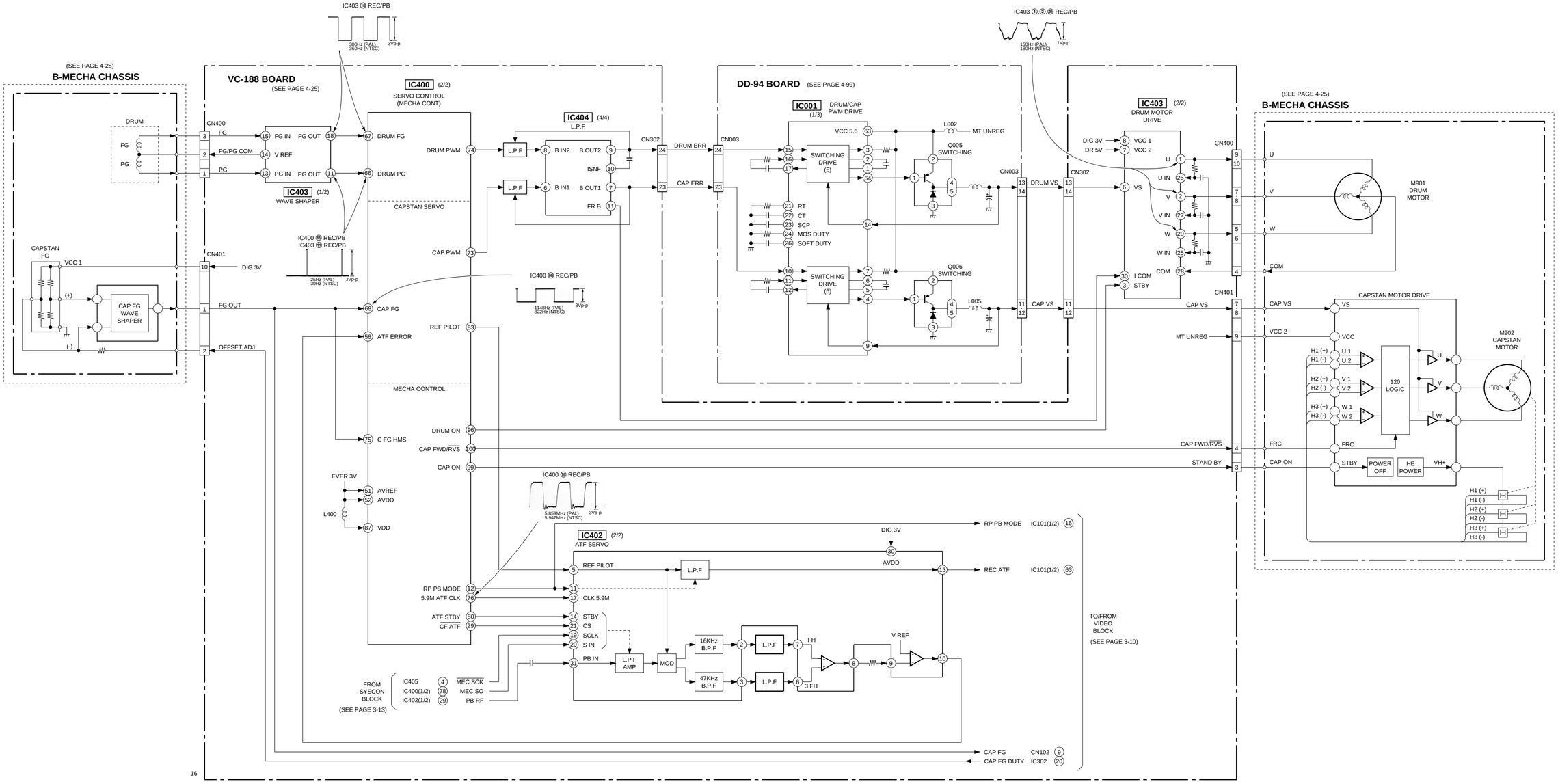

3-13. POWER (1) BLOCK DIAGRAM

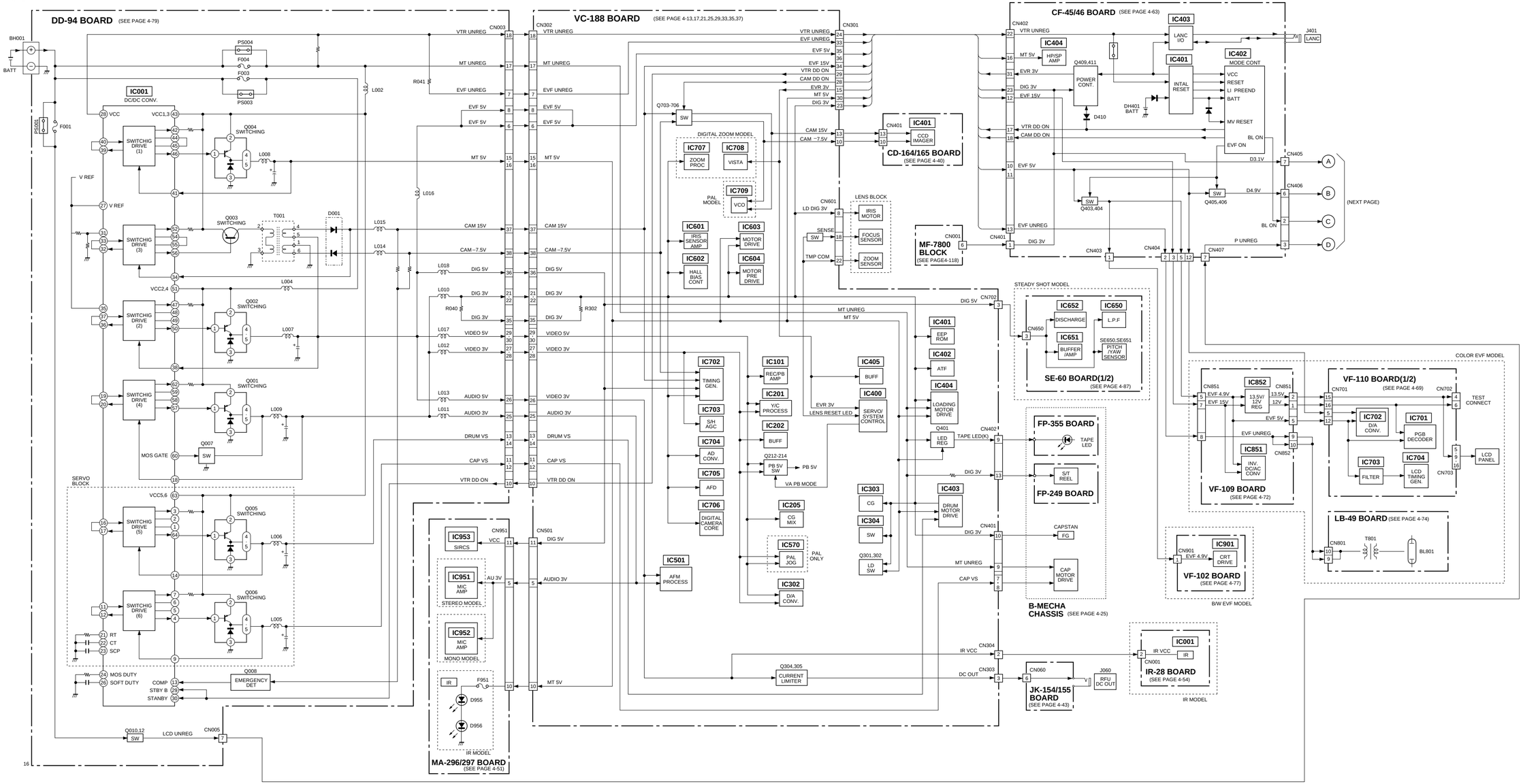

4-1. FRAME SCHEMATIC DIAGRAM

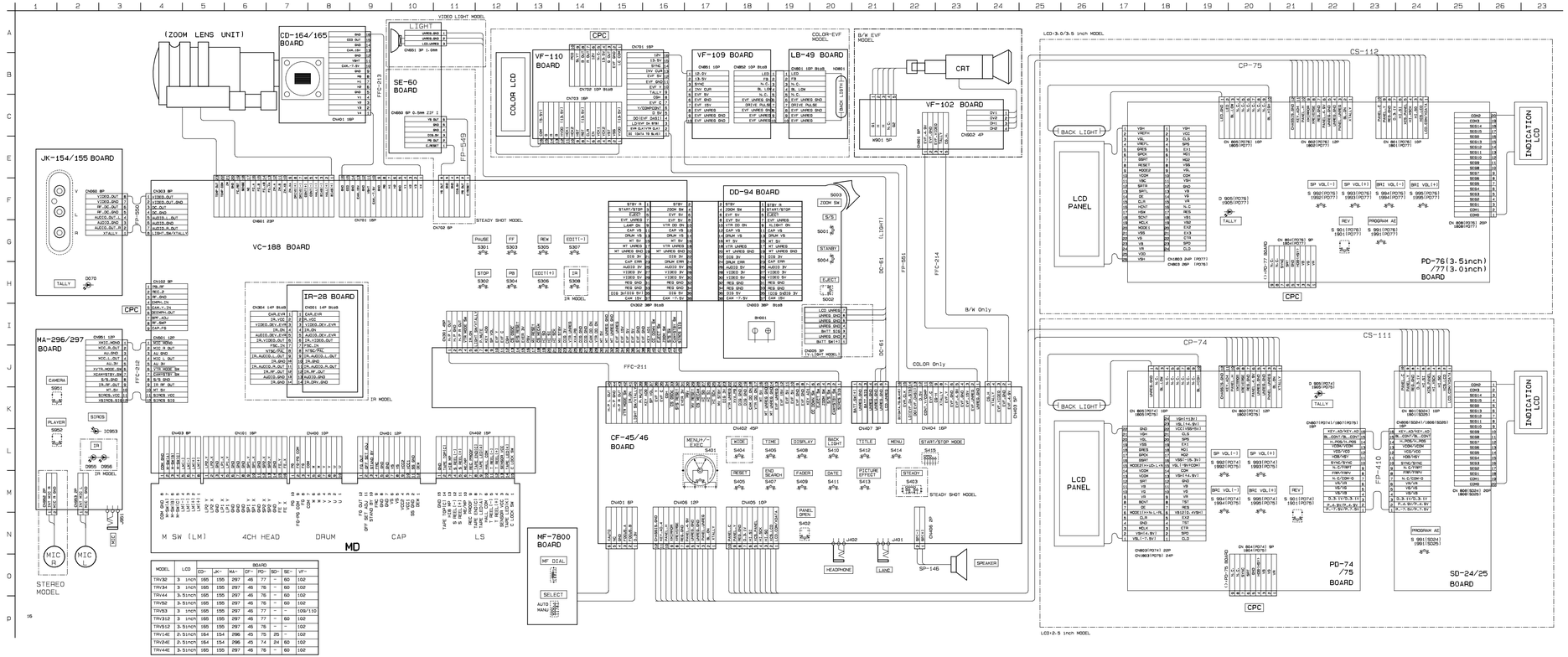

MODEL	LCD	BOARD						
		CD-	JK-	MA-	DF-	PD-	SD-	SE-	VF-
TRV32	3 inch	165	155	297	46	77	-	60	102
TRV34	3 inch	165	155	297	46	76	-	60	102
TRV44	3.5inch	165	155	297	46	76	-	60	102
TRV52	3.5inch	165	155	297	46	76	-	60	102
TRV53	3 inch	165	155	297	46	77	-	-	109/110
TRV312	3 inch	165	155	297	46	77	-	60	102
TRV512	3.5inch	165	155	297	46	76	-	-	102
TRV14E	2.5inch	164	154	296	45	75	25	-	102
TRV24E	2.5inch	164	154	296	45	74	24	60	102
TRV44E	3.5inch	165	155	297	46	76	-	60	102

4-2. PRINTED WIRING BOARDS AND SCHEMATIC DIAGRAMS

THIS NOTE IS COMMON FOR PRINTED WIRING BOARDS AND SCHEMATIC DIAGRAMS.
(In addition to this, the necessary note is printed in each block.)

- **For printed wiring boards.**
- ▬ : Pattern from the side which enables seeing. (The other layers' patterns are not indicated.)
- ● : Through hole is omitted.
- Printed wiring board which has four layers structure but inner two layers' patterns are omitted.

Caution :
SIDE A : The pattern face side which is seen when the upper case is opened.
SIDE B : The opposite pattern face side to the pattern seen when the upper case is opened.

- Chip parts (transistor)

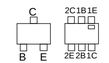

C: Collector
B: Base
E: Emitter

- **For schematic diagrams.**
- Caution when replacing chip parts. New parts must be attached after removal of chip. Be careful not to heat the minus side of tantalum capacitor, because it is damaged by the heat.
- All resistor are in ohms, 1/4W unless otherwise noted. Chip resistor are 1/10W unless otherwise noted. kΩ: 1000Ω, MΩ, : 1000kΩ.
- All capacitors are in μF unless otherwise noted. pF : μμF. 50V or less are not indicated except for electrolytics and tantalums.
- All variable and adjustable resistors have characteristic curve B, unless otherwise noted.
- ⏦ : nonflammable resistor.
- ⏦ : fusible resistor.
- ▭ : panel designation.
- △ : internal component.
- ▭ : adjustment for repair. *
- ▬ : B+Line. *
- ▬▬ : B+Line. *
- ⇒ : IN/OUT direction of (+,–) B LINE. *
- Circled numbers refer to waveforms. *
- Signal name
  XEDIT → $\overline{\text{EDIT}}$ PB/XREC → $\overline{\text{PB/REC}}$

Note : Les composants identifiés par une marque ⚠ sont critiques pour la sécurité. Ne les remplacer que par une pièce portant le numéro spécifié.

Note : The components identified by mark ⚠ or dotted line with mark ⚠ are critical for safety. Replace only with part number specified.

- Voltages and waveforms are measured between the measurement points and ground when camera shoots color bar chart of pattern box. They are reference values * and reference waveforms. (VOM of DC 10 MΩ input impedance is used.).
- Voltage values change depending upon input impedance of VOM used.)

1. Connection

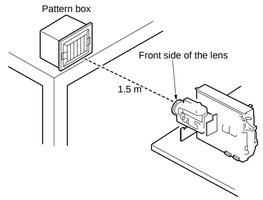

2. Adjust the distance so that the output waveform of Fig. a and the Fig. b can be obtain.

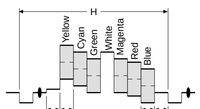

Fig.a (Video output terminal output waveform)

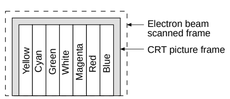

Fig.b (Picture on monitor TV)

When indicating parts by reference number, pleas include the board name.

- * : indicated by the color red.

VC-188 BOARD

C101	G-3	C202	D-2	C406	E-9	C539	E-2	C757	A-13	IC501	F-17	Q119	F-16	R123	F-5	R223	C-15	R314	A-5	R453	G-7	R620	A-16
C102	F-4	C203	C-3	C407	F-12	C541	F-2	C758	B-13	IC570	D-18	Q121	E-3	R124	F-5	R224	B-1	R315	F-11	R454	G-7	R621	A-15
C103	G-4	C204	C-2	C408	F-12	C543	E-17	C759	B-6	IC601	B-16	Q122	D-4	R125	F-5	R225	C-2	R316	F-9	R455	G-10	R630	B-2
C104	G-4	C205	B-2	C409	G-10	C544	E-1	C764	B-11	IC602	B-15	Q123	D-3	R129	F-5	R226	C-15	R317	E-17	R456	G-10	R631	B-2
C105	G-3	C206	C-2	C410	F-11	C546	E-1	C765	C-11	IC603	A-17	Q202	C-15	R132	F-14	R228	C-17	R319	A-11	R458	G-12	R632	B-16
C106	G-15	C207	B-2	C411	F-8	C548	E-18	C770	C-12	IC604	A-2	Q206	C-17	R133	F-14	R229	C-4	R320	A-1	R459	G-12	R633	B-3
C107	G-15	C208	B-4	C412	F-8	C550	E-2	C771	C-12	IC702	B-14	Q208	D-16	R134	F-14	R230	C-15	R321	A-12	R460	G-12	R701	A-14
C108	F-4	C209	B-3	C413	G-10	C551	E-18	C772	C-8	IC703	C-5	Q211	C-15	R135	E-3	R231	C-18	R322	A-12	R461	G-12	R702	A-14
C109	G-15	C210	C-15	C414	G-12	C553	E-18	C773	B-6	IC704	B-6	Q213	D-16	R136	F-5	R232	C-3	R323	A-13	R462	G-6	R703	B-5
C110	G-5	C211	C-3	C415	G-12	C554	E-1	C774	B-6	IC705	B-13	Q214	D-16	R137	F-14	R233	A-18	R324	A-3	R463	G-7	R704	B-4
C111	G-5	C212	C-3	C416	D-11	C555	E-2	C775	C-14	IC706	B-7	Q215	C-17	R138	F-5	R234	D-3	R325	A-2	R464	G-6	R708	B-8
C112	G-5	C213	C-16	C417	F-11	C556	E-17	C776	C-8	IC707	B-12	Q216	C-17	R139	E-3	R235	C-4	R326	A-18	R465	G-6	R709	C-14
C113	G-5	C214	C-17	C418	F-11	C557	E-2	C777	C-8	IC709	A-8	Q217	D-17	R140	F-14	R236	B-1	R328	D-6	R466	F-7	R710	C-14
C114	F-15	C215	C-1	C419	E-9	C558	E-17	C778	D-12			Q218	D-17	R141	F-14	R237	B-18	R329	D-13	R467	G-9	R713	A-8
C115	F-16	C216	A-1	C420	F-11	C561	G-1	C779	D-7	L101	G-16	Q219	E-16	R142	F-14	R239	C-16	R330	D-15	R468	G-10	R714	A-8
C116	F-15	C217	B-2	C421	F-11	C563	G-1	C780	D-7	L102	F-5	Q221	C-17	R145	E-15	R240	B-1	R331	C-14	R469	G-10	R715	A-8
C117	F-15	C218	D-16	C423	G-12	C571	C-1	C781	D-12	L103	F-5	Q222	C-18	R146	E-5	R241	D-3	R332	C-15	R471	C-11	R717	A-8
C118	F-15	C219	C-4	C424	E-11	C572	D-18	C782	C-12	L104	E-14	Q223	D-15	R147	E-5	R242	B-2	R333	C-14	R472	F-12	R719	C-11
C119	F-5	C220	C-16	C425	E-10	C573	C-1			L105	F-2	Q224	D-16	R150	E-4	R243	D-17	R334	C-15	R473	F-12	R721	C-3
C120	F-15	C221	C-15	C426	G-10	C574	D-1	CN101	G-4	L106	G-16	Q226	C-17	R152	G-17	R244	D-17	R335	C-15	R475	D-7	R722	C-8
C121	F-15	C223	C-4	C427	G-8	C575	D-1	CN102	G-18	L107	F-3	Q227	C-17	R153	G-16	R245	C-18	R336	C-15	R478	E-7	R724	C-8
C122	F-5	C224	C-3	C428	F-11	C576	D-1	CN301	F-6	L108	F-16	Q228	C-2	R154	G-2	R246	C-18	R337	D-5	R479	D-1	R725	C-6
C123	G-4	C225	C-4	C429	G-8	C577	D-1	CN302	D-10	L109	F-16	Q229	C-2	R155	G-2	R247	D-17	R339	F-13	R481	G-8	R728	A-4
C124	G-4	C226	C-15	C430	G-8	C578	C-1	CN303	D-1	L110	F-3	Q230	B-1	R156	G-3	R248	C-4	R340	C-18	R484	D-7	R729	A-14
C125	F-15	C227	C-15	C431	G-11	C602	B-3	CN304	E-3	L111	F-16	Q231	C-18	R157	G-16	R249	C-4	R341	B-18	R485	D-7	R732	B-14
C126	F-4	C228	C-4	C432	G-10	C603	B-3	CN400	G-5	L112	E-15	Q232	B-1	R158	F-3	R250	B-17	R342	F-13	R486	D-7	R733	B-14
C127	F-4	C229	C-3	C433	G-11	C604	B-4	CN401	G-6	L113	D-3	Q301	F-9	R159	F-2	R252	C-17	R343	B-18	R487	D-7	R734	B-14
C128	E-5	C230	C-3	C434	G-7	C605	B-16	CN402	G-7	L114	D-3	Q302	F-11	R160	G-3	R254	D-16	R344	B-18	R488	F-6	R735	B-14
C129	F-3	C231	C-2	C435	G-10	C606	B-3	CN403	G-2	L115	D-16	Q303	A-1	R163	G-17	R255	D-16	R400	E-12	R501	F-1	R743	A-13
C130	F-4	C232	C-2	C436	G-12	C607	B-16	CN501	E-1	L202	C-16	Q304	C-18	R164	F-16	R256	C-3	R401	E-12	R502	G-18	R744	A-13
C131	F-5	C233	D-16	C437	G-6	C608	B-16	CN601	A-3	L203	C-16	Q305	B-18	R165	F-3	R257	D-17	R402	E-7	R503	F-2	R751	C-8
C132	F-3	C234	D-4	C438	G-6	C609	A-15	CN701	A-4	L205	C-15	Q400	G-8	R167	E-3	R259	D-3	R403	E-7	R505	E-16	R756	B-11
C133	F-4	C235	D-4	C439	G-6	C610	A-15	CN702	E-18	L207	C-17	Q401	G-9	R168	E-3	R260	C-4	R404	E-7	R506	E-1	R757	B-11
C134	F-14	C236	D-4	C441	G-13	C611	A-4			L210	D-15	Q501	G-1	R169	E-16	R261	C-2	R405	E-12	R507	F-16	R758	A-8
C136	G-14	C237	C-4	C442	G-9	C612	A-4	D101	E-14	L211	D-17	Q506	G-18	R170	E-16	R262	C-2	R406	E-12	R511	E-1	R759	A-8
C138	F-3	C238	C-4	C443	G-9	C613	A-16	D102	D-3	L212	C-13	Q507	G-18	R171	E-15	R263	C-3	R407	E-7	R512	E-17	R760	B-11
C139	F-5	C240	C-17	C444	G-13	C614	A-16	D103	E-14	L213	C-16	Q570	D-17	R172	D-15	R265	D-15	R408	F-8	R513	F-2	R761	B-11
C140	F-3	C242	D-14	C445	G-13	C615	A-2	D201	C-2	L214	C-13	Q601	B-3	R174	E-2	R266	B-18	R409	F-8	R514	D-1	R775	B-8
C141	E-3	C243	C-16	C446	G-13	C616	A-17	D202	C-16	L215	C-17	Q602	A-16	R175	D-4	R267	C-4	R410	E-8	R515	E-17	R776	B-5
C142	F-14	C244	C-4	C447	G-13	C618	A-18	D203	D-16	L216	C-16	Q603	B-3	R176	D-15	R268	D-15	R411	D-10	R516	F-17	R777	B-5
C143	E-3	C245	C-16	C448	G-6	C619	A-17	D204	B-1	L301	D-15	Q703	A-13	R177	D-4	R270	C-18	R412	F-8	R517	D-18	R778	C-11
C144	F-5	C246	D-4	C449	G-6	C620	B-16	D301	A-8	L303	D-6	Q704	A-12	R178	D-4	R271	C-18	R413	D-11	R519	G-17	R779	C-11
C145	E-3	C247	D-17	C450	G-13	C621	B-3	D302	A-7	L304	D-13	Q705	A-12	R179	D-3	R272	D-17	R414	D-11	R520	E-17	R780	C-11
C146	F-14	C248	C-2	C451	F-6	C701	B-5	D303	A-6	L305	D-6	Q706	A-12	R180	D-4	R274	E-16	R417	F-7	R522	G-1	R781	C-11
C147	F-14	C249	C-2	C452	G-13	C704	B-4	D304	A-5	L400	D-8	Q750	C-8	R181	D-4	R276	E-16	R418	F-6	R526	G-1	R782	D-11
C148	F-5	C254	C-17	C453	G-13	C705	B-5	D305	A-4	L401	F-11	Q752	B-8	R182	D-3	R277	E-16	R419	F-12	R527	G-1	R783	D-12
C149	E-4	C256	E-16	C456	F-11	C706	B-15	D306	A-1	L402	E-9	Q753	B-11	R183	D-3	R279	D-15	R420	D-8	R530	G-17	R784	D-12
C150	E-4	C257	B-2	C458	G-13	C712	B-13	D307	F-11	L570	C-1	Q754	B-11	R184	D-3	R281	D-15	R421	D-9	R531	G-1		
C151	E-15	C259	C-15	C459	F-6	C714	A-5	D705	A-8	L601	A-3			R185	D-3	R282	D-4	R422	E-13	R532	G-1	S301	A-11
C152	E-15	C263	D-16	C502	G-17	C715	B-5	D706	A-4	L602	A-17	R061	C-1	R186	D-3	R283	D-16	R423	D-9	R533	G-18	S302	A-15
C155	E-16	C265	D-15	C504	G-18	C717	A-14			L706	A-11	R062	B-2	R187	D-3	R284	D-15	R424	F-8	R534	G-18	S303	A-12
C156	E-15	C266	D-16	C505	G-17	C718	A-14	FB301	B-18	L715	A-13	R063	B-2	R189	F-15	R286	C-15	R425	F-12	R537	F-18	S304	A-13
C157	E-5	C267	C-17	C506	F-1	C719	B-14	FB601	A-17	L717	G-13	R064	C-1	R190	F-15	R287	D-16	R426	F-12	R556	G-1	S305	A-14
C158	G-2	C268	C-17	C507	G-17	C722	B-14	FB701	A-13	L751	C-8	R065	B-2	R191	E-5	R289	D-16	R427	E-9	R562	E-17	S306	A-2
C159	G-17	C269	C-16	C508	G-17	C725	C-14	FB702	A-13	L752	B-11	R101	G-5	R192	E-14	R290	C-15	R428	E-9	R564	F-17	S307	A-3
C160	G-16	C270	D-17	C509	G-2	C726	C-14	FB703	A-6	L753	L-11	R102	G-5	R193	G-16	R291	E-16	R429	G-8	R570	D-17	S308	A-18
C161	F-2	C271	D-17	C510	F-17	C727	B-5	FB704	A-13	L754	L-12	R103	G-5	R201	C-16	R292	C-3	R430	F-9	R571	D-1		
C162	G-3	C274	B-1	C511	F-1	C728	B-5	FB705	B-13			R104	G-5	R202	C-16	R293	B-3	R431	E-11	R575	D-1	X400	E-11
C164	F-16	C275	B-18	C512	F-2	C729	C-5	FB706	B-13	Q101	G-5	R105	G-5	R203	C-16	R294	C-16	R434	F-10	R581	D-1	X701	A-5
C165	F-3	C276	B-1	C513	F-2	C732	C-5	FB707	B-13	Q102	G-5	R106	F-15	R204	C-17	R295	D-2	R436	D-11	R601	B-3	X702	A-7
C166	F-16	C277	C-13	C514	F-17	C734	A-5	FB708	B-13	Q103	F-16	R107	F-15	R205	B-1	R296	D-4	R437	F-9	R603	B-3	X703	D-11
C167	F-16	C278	C-3	C515	G-17	C735	A-12			Q104	F-15	R108	F-15	R206	C-15	R297	D-2	R438	F-11	R604	B-16		
C168	F-2	C279	A-18	C516	G-17	C736	A-11	IC101	F-4	Q105	F-15	R109	G-5	R207	B-1	R298	D-4	R439	F-11	R605	B-3		
C169	F-3	C280	B-1	C517	G-18	C739	A-7	IC201	C-3	Q106	F-15	R110	F-15	R208	B-1	R299	D-4	R440	F-11	R606	B-16		
C170	E-17	C302	D-15	C518	F-2	C740	A-8	IC202	D-17	Q107	F-5	R111	F-5	R210	C-4	R302	C-9	R441	E-11	R607	B-4		
C171	E-15	C303	D-6	C520	F-2	C741	A-8	IC205	B-18	Q108	F-16	R112	F-5	R211	B-3	R303	A-10	R442	E-11	R608	B-3		
C172	E-15	C304	D-4	C522	F-2	C742	A-8	IC206	A-18	Q109	F-15	R113	F-15	R212	C-15	R304	F-12	R443	G-9	R609	B-4		
C173	D-3	C305	E-14	C523	F-1	C745	C-7	IC302	D-14	Q110	F-15	R114	F-15	R213	C-4	R305	F-7	R444	G-9	R610	B-3		
C174	E-3	C307	B-18	C529	G-1	C746	B-8	IC303	D-5	Q111	F-15	R115	F-15	R214	B-1	R306	G-10	R445	G-9	R611	B-16		
C176	D-4	C309	C-1	C530	F-2	C748	B-8	IC304	F-13	Q112	F-14	R116	F-15	R215	B-2	R307	F-11	R446	G-9	R612	B-3		
C177	D-3	C400	F-8	C531	G-1	C750	B-13	IC400	E-9	Q113	E-14	R117	F-14	R216	B-1	R308	F-10	R447	F-11	R613	B-4		
C178	D-3	C401	E-8	C532	E-1	C751	B-13	IC401	D-11	Q114	E-14	R118	F-14	R218	C-2	R309	F-10	R448	F-11	R614	B-16		
C179	D-3	C402	F-9	C533	F-17	C752	B-14	IC402	E-10	Q115	E-5	R119	F-4	R219	C-16	R310	F-10	R449	F-11	R615	B-16		
C180	D-3	C403	F-9	C534	E-2	C753	B-17	IC403	G-13	Q116	G-16	R120	F-4	R220	C-14	R311	F-10	R450	F-11	R616	B-16		
C181	D-3	C404	D-8	C535	G-2	C754	C-6	IC404	G-11	Q117	G-2	R121	F-14	R221	D-3	R312	A-8	R451	G-7	R618	B-3		
C182	D-16	C405	E-9	C537	E-1	C755	B-13	IC405	D-8	Q118	F-3	R122	F-14	R222	B-3	R313	A-7	R452	G-12	R619	B-16		

LOCATION
VC-188

VC-188 BOARD (1/8)

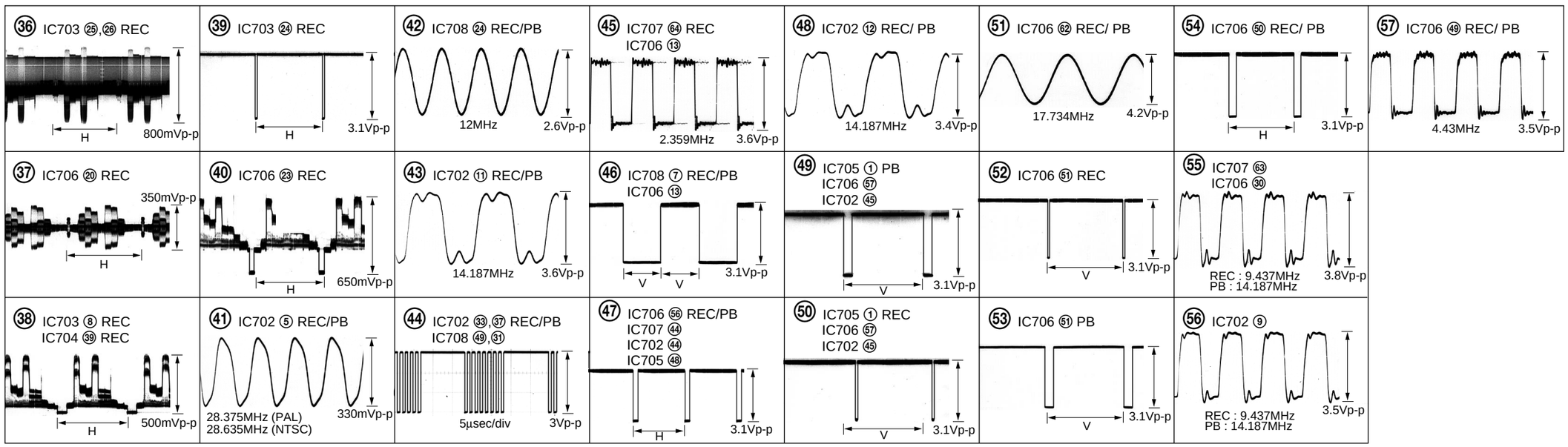

DIFFERENCES
VC-188 (1/8)

VC-188 (CAMERA 1) SCHEMATIC DIAGRAM
— Ref. No. VC-188 Board; 1,000 Series —

• See page 4-5 for VC-188 BOARD printed wiring board.

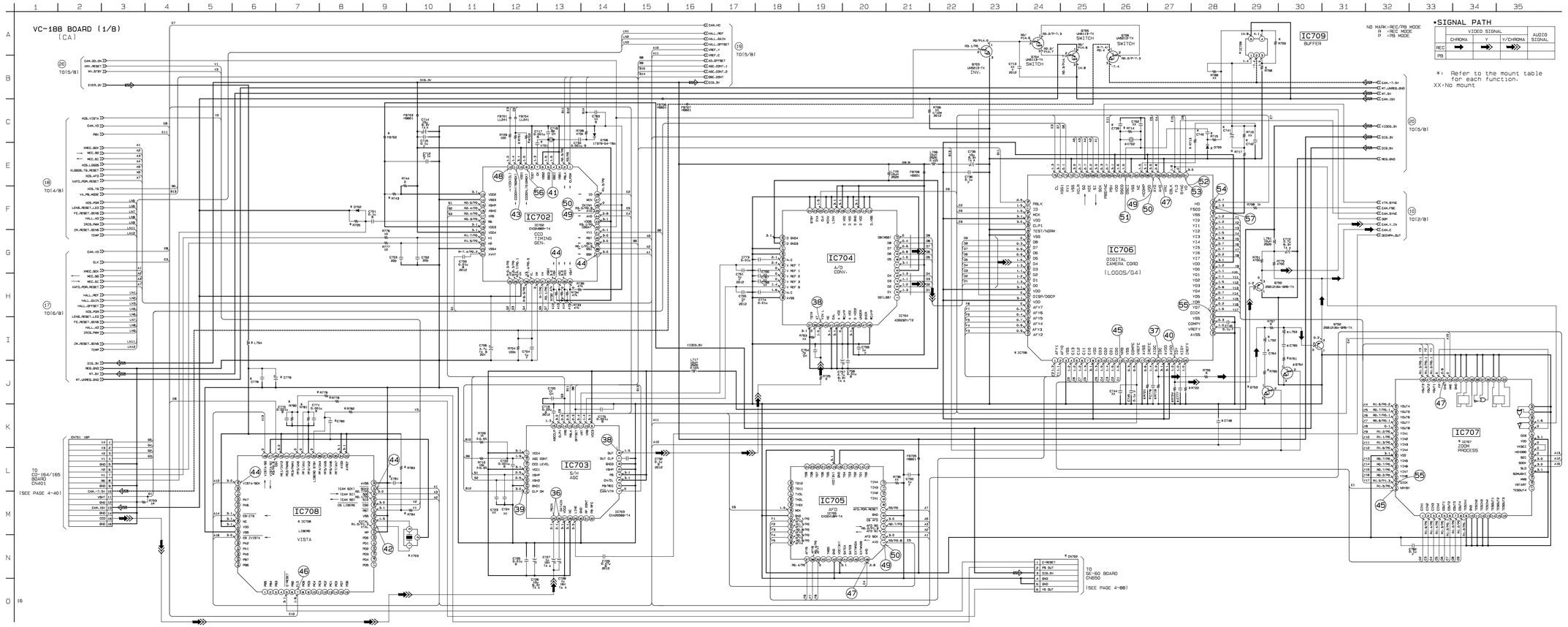

VC-188 (CAMERA 2) SCHEMATIC DIAGRAM

— Ref. No. VC-188 Board; 1,000 Series —

• See page 4-5 for VC-188 BOARD printed wiring board.

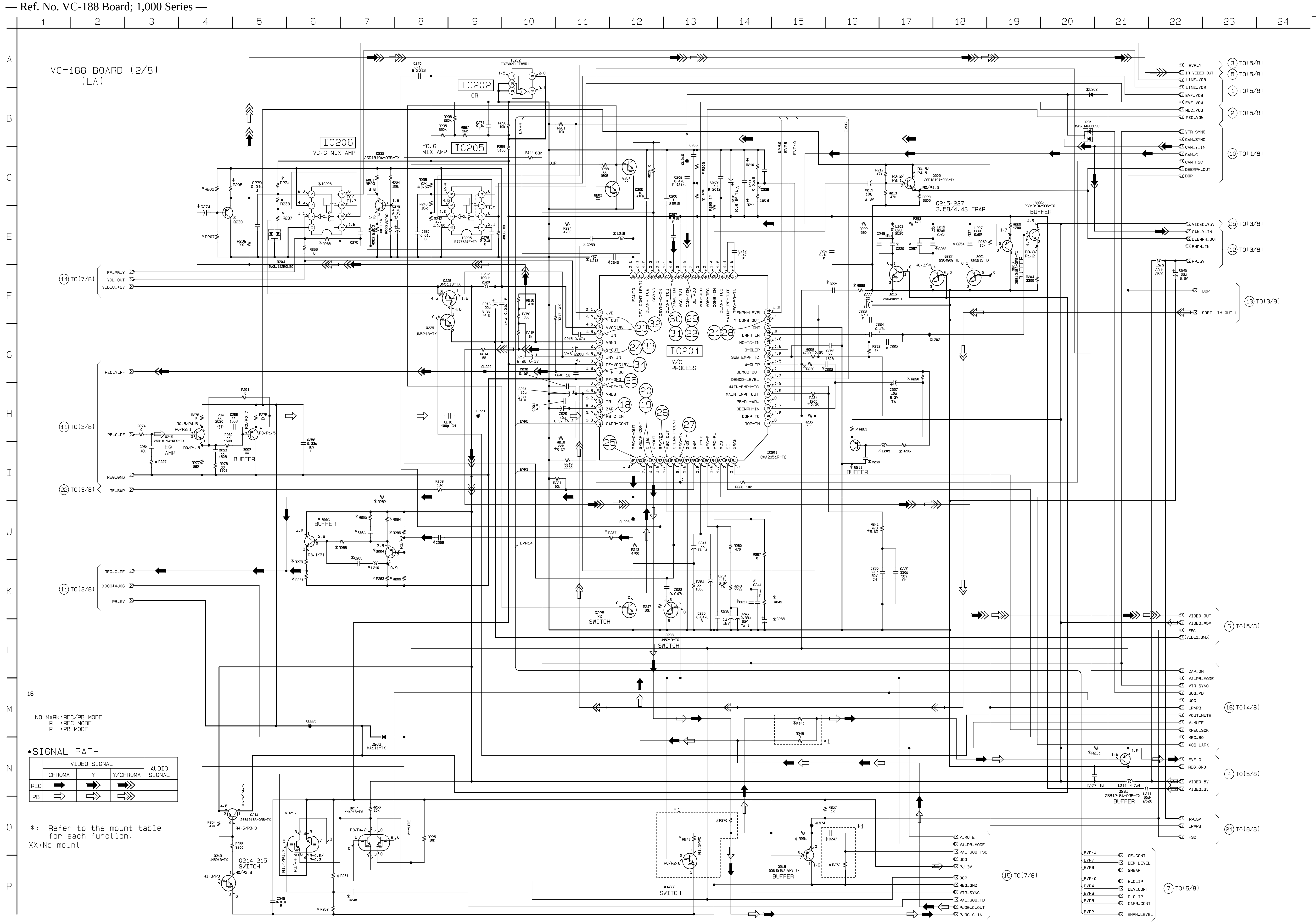

Date : 96.07.25

Ref_No	IR無し NTSC/510/TR	IR無し NTSC/510/V	IR無し NTSC/760/TR	IR無し NTSC/760/V	IR無し PAL/510/TR	IR無し PAL/510/V	IR無し PAL/760/TR	IR無し PAL/760/V	IR有り NTSC/510/TR	IR有り NTSC/510/V	IR有り NTSC/760/TR	IR有り NTSC/760/V	IR有り PAL/510/TR	IR有り PAL/510/V	IR有り PAL/760/TR	IR有り PAL/760/V
C203	0.047u	0.047u	XX	XX	0.047u	0.047u	XX	XX	0.047u	0.047u	XX	XX	0.047u	0.047u	XX	XX
C220	8p	8p	8p	8p	XX	XX	XX	XX	8p	8p	8p	8p	XX	XX	XX	XX
C221	XX	XX	XX	XX	0.1u	0.1u	0.1u	0.1u	XX	XX	XX	XX	0.1u	0.1u	0.1u	0.1u
C225	180p	180p	180p	180p	120p	120p	120p	120p	180p	180p	180p	180p	120p	120p	120p	120p
C226	XX	XX	XX	XX	220p	220p	220p	220p	XX	XX	XX	XX	220p	220p	220p	220p
C228	XX	XX	0.047u	0.047u	XX	XX	0.047u	0.047u	XX	XX	0.047u	0.047u	XX	XX	0.047u	0.047u
C237	220p	220p	220p	220p	2200p	2200p	2200p	2200p	220p	220p	220p	220p	2200p	2200p	2200p	2200p
C238	2.2u	2.2u	2.2u	2.2u	3.3u	3.3u	3.3u	3.3u	2.2u	2.2u	2.2u	2.2u	3.3u	3.3u	3.3u	3.3u
C243	68p	68p	68p	68p	12p	12p	12p	12p	68p	68p	68p	68p	12p	12p	12p	12p
C244	470p	470p	470p	470p	0.01u	0.01u	0.01u	0.01u	470p	470p	470p	470p	0.01u	0.01u	0.01u	0.01u
C247	XX	XX	XX	XX	100p	100p	100p	100p	XX	XX	XX	XX	100p	100p	100p	100p
C248	XX	XX	XX	XX	47p	47p	47p	47p	XX	XX	XX	XX	47p	47p	47p	47p
C254	24p	24p	24p	24p	16p	16p	16p	16p	24p	24p	24p	24p	16p	16p	16p	16p
C259	100p	100p	100p	100p	XX	XX	XX	XX	100p	100p	100p	100p	XX	XX	XX	XX
C263	22p	22p	22p	22p	27p	27p	XX	XX	22p	22p	22p	22p	27p	27p	XX	XX
C265	82p	82p	82p	82p	82p	82p	XX	XX	82p	82p	82p	82p	82p	82p	XX	XX
C266	0.01u	0.01u	0.01u	0.01u	0.01u	0.01u	XX	XX	0.01u	0.01u	0.01u	0.01u	0.01u	0.01u	XX	XX
C268	8p	8p	8p	8p	XX	XX	XX	XX	8p	8p	8p	8p	XX	XX	XX	XX
C269	XX	XX	XX	XX	33p	33p	33p	33p	XX	XX	XX	XX	33p	33p	33p	33p
C274	XX	XX	XX	XX	XX	XX	XX	XX	10u	10u	10u	10u	10u	10u	10u	10u
C275	0.01u	XX	0.01u	XX	0.01u	XX	0.01u	XX	0.01u	XX	0.01u	XX	0.01u	XX	0.01u	XX
D202	XX	XX	XX	XX	MA111-TX	MA111-TX	MA111-TX	MA111-TX	XX	XX	XX	XX	MA111-TX	MA111-TX	MA111-TX	MA111-TX
IC206	BA7653AF-E	XX	BA7653AF-E	XX	BA7653AF-E	XX	BA7653AF-E	XX	BA7653AF-E	XX	BA7653AF-E	XX	BA7653AF-E	XX	BA7653AF-E	XX
L205	22uH	22uH	22uH	22uH	XX	XX	XX	XX	22uH	22uH	22uH	22uH	XX	XX	XX	XX
L210	22uH	22uH	22uH	22uH	10uH	10uH	XX	XX	22uH	22uH	22uH	22uH	10uH	10uH	XX	XX
L213	100uH	100uH	100uH	100uH	47uH	47uH	47uH	47uH	100uH	100uH	100uH	100uH	47uH	47uH	47uH	47uH
L216	XX	XX	XX	XX	100uH	100uH	100uH	100uH	XX	XX	XX	XX	100uH	100uH	100uH	100uH
Q211	2SB1218A-Q	2SB1218A-Q	2SB1218A-Q	2SB1218A-Q	XX	XX	XX	XX	2SB1218A-Q	2SB1218A-Q	2SB1218A-Q	2SB1218A-Q	XX	XX	XX	XX
Q216	XX	XX	XX	XX	XN4312-TW	XN4312-TW	XN4312-TW	XN4312-TW	XX	XX	XX	XX	XN4312-TW	XN4312-TW	XN4312-TW	XN4312-TW
Q222	XX	XX	XX	XX	UN5213-TX	UN5213-TX	UN5213-TX	UN5213-TX	XX	XX	XX	XX	UN5213-TX	UN5213-TX	UN5213-TX	UN5213-TX
Q223	2SD1819A-Q	2SD1819A-Q	2SD1819A-Q	2SD1819A-Q	2SD1819A-Q	2SD1819A-Q	XX	XX	2SD1819A-Q	2SD1819A-Q	2SD1819A-Q	2SD1819A-Q	2SD1819A-Q	2SD1819A-Q	XX	XX
Q224	2SB1218A-Q	2SB1218A-Q	2SB1218A-Q	2SB1218A-Q	2SB1218A-Q	2SB1218A-Q	XX	XX	2SB1218A-Q	2SB1218A-Q	2SB1218A-Q	2SB1218A-Q	2SB1218A-Q	2SB1218A-Q	XX	XX
Q230	XX	XX	XX	XX	XX	XX	XX	XX	2SB1218A-Q	2SB1218A-Q	2SB1218A-Q	2SB1218A-Q	2SB1218A-Q	2SB1218A-Q	2SB1218A-Q	2SB1218A-Q
Q231	XX	2SB1218A-Q	XX	2SB1218A-Q	XX	2SB1218A-Q	XX	2SB1218A-Q	XX	2SB1218A-Q	XX	2SB1218A-Q	XX	2SB1218A-Q	XX	2SB1218A-Q
R202	18k	18k	0	0	18k	18k	0	0	18k	18k	0	0	18k	18k	0	0
R203	3300	3300	XX	XX	8200	8200	XX	XX	3300	3300	XX	XX	8200	8200	XX	XX
R205	XX	XX	XX	XX	XX	XX	XX	XX	47k	47k	47k	47k	47k	47k	47k	47k
R206	330	330	330	330	XX	XX	XX	XX	330	330	330	330	XX	XX	XX	XX
R207	XX	XX	XX	XX	XX	XX	XX	XX	47k	47k	47k	47k	47k	47k	47k	47k
R208	XX	XX	XX	XX	XX	XX	XX	XX	2200	2200	2200	2200	2200	2200	2200	2200
R210	0	0	22k	22k	0	0	XX	XX	0	0	22k	22k	0	0	XX	XX
R211	XX	XX	2200	2200	XX	XX	0	0	XX	XX	2200	2200	XX	XX	0	0
R224	68k	XX	68k	XX	68k	XX	68k	XX	68k	XX	68k	XX	68k	XX	68k	XX
R226	XX	XX	XX	XX	10k	10k	10k	10k	XX	XX	XX	XX	10k	10k	10k	10k
R230	XX	XX	XX	XX	1k	1k	1k	1k	XX	XX	XX	XX	1k	1k	1k	1k
R231	XX	2200	XX	2200	XX	2200	XX	2200	XX	2200	XX	2200	XX	2200	XX	2200
R233	15k	XX	15k	XX	15k	XX	15k	XX	15k	XX	15k	XX	15k	XX	15k	XX
R237	120k	XX	120k	XX	120k	XX	120k	XX	120k	XX	120k	XX	120k	XX	120k	XX
R238	XX	0	XX	0	XX	0	XX	0	XX	0	XX	0	XX	0	XX	0
R245	0	0	0	0	XX	XX	XX	XX	0	0	0	0	XX	XX	XX	XX
R249	3300	3300	3300	3300	1800	1800	1800	1800	3300	3300	3300	3300	1800	1800	1800	1800
R253	0	XX	0	XX	0	XX	0	XX	0	XX	0	XX	0	XX	0	XX
R261	XX	XX	XX	XX	47k	47k	47k	47k	XX	XX	XX	XX	47k	47k	47k	47k
R262	XX	XX	XX	XX	22k	22k	22k	22k	XX	XX	XX	XX	22k	22k	22k	22k
R263	4700	4700	4700	4700	XX	XX	XX	XX	4700	4700	4700	4700	XX	XX	XX	XX
R265	470	470	470	470	1k	1k	XX	XX	470	470	470	470	1k	1k	XX	XX
R268	820	820	820	820	560	560	XX	XX	820	820	820	820	560	560	XX	XX
R270	XX	XX	XX	XX	470	470	470	470	XX	XX	XX	XX	470	470	470	470
R271	XX	XX	XX	XX	2200	2200	2200	2200	XX	XX	XX	XX	2200	2200	2200	2200
R272	XX	XX	XX	XX	1500	1500	1500	1500	XX	XX	XX	XX	1500	1500	1500	1500
R279	0	0	0	0	0	0	XX	XX	0	0	0	0	0	0	XX	XX
R281	3300	3300	3300	3300	3300	3300	XX	XX	3300	3300	3300	3300	3300	3300	XX	XX
R282	XX	XX	XX	XX	XX	XX	0	0	XX	XX	XX	XX	XX	XX	0	0
R283	680	680	680	680	680	680	XX	XX	680	680	680	680	680	680	XX	XX
R284	680	680	680	680	680	680	XX	XX	680	680	680	680	680	680	XX	XX
R286	18k	18k	18k	18k	18k	18k	XX	XX	18k	18k	18k	18k	18k	18k	XX	XX
R287	0	0	0	0	0	0	XX	XX	0	0	0	0	0	0	XX	XX
R289	33k	33k	33k	33k	33k	33k	XX	XX	33k	33k	33k	33k	33k	33k	XX	XX
R290	XX	XX	XX	XX	0	0	0	0	XX	XX	XX	XX	0	0	0	0

*1

仕向	R245	R246	R272	C247	R270	R271	Q222
NTSC	0	0	XX	XX	XX	XX	XX
PAL	XX	0	1500	100P CH	470	2200	UN5213 -TX
PALM B/W	XX	XX	XX	XX	470	2200	UN5213 -TX
PALM COLOR	0	XX	XX	XX	470	2200	UN5213 -TX

VC-188 BOARD (2/8)

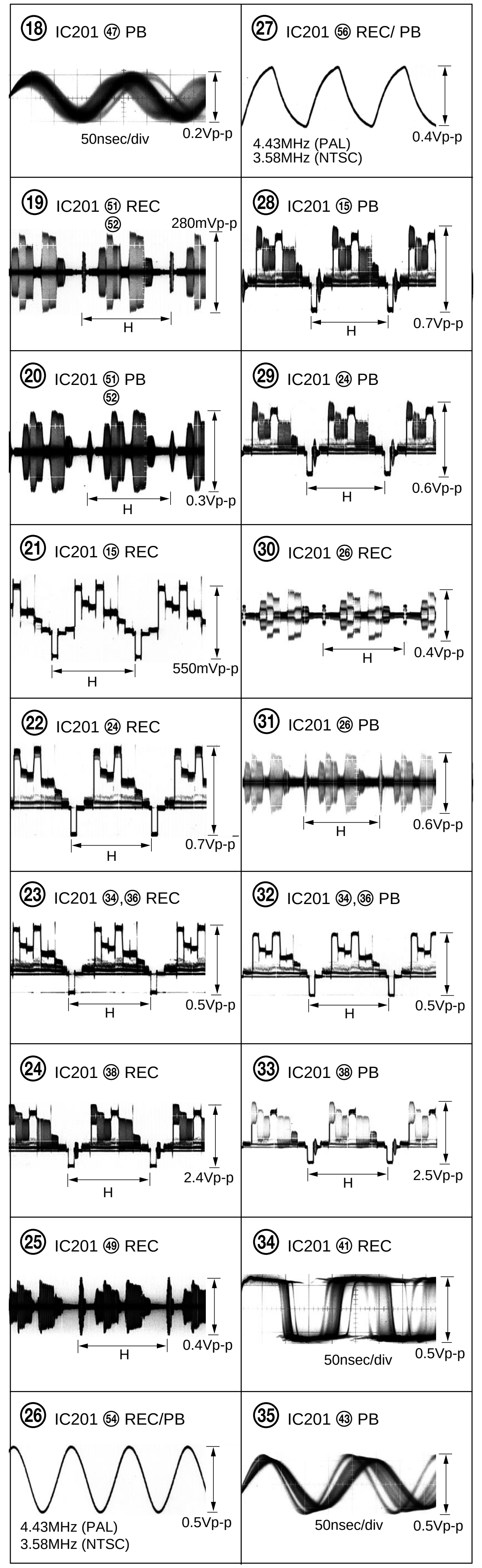

VC-188 (VIDEO) SCHEMATIC DIAGRAM
— Ref. No. VC-188 Board; 1,000 Series —

• See page 4-5 for VC-188 BOARD printed wiring board.

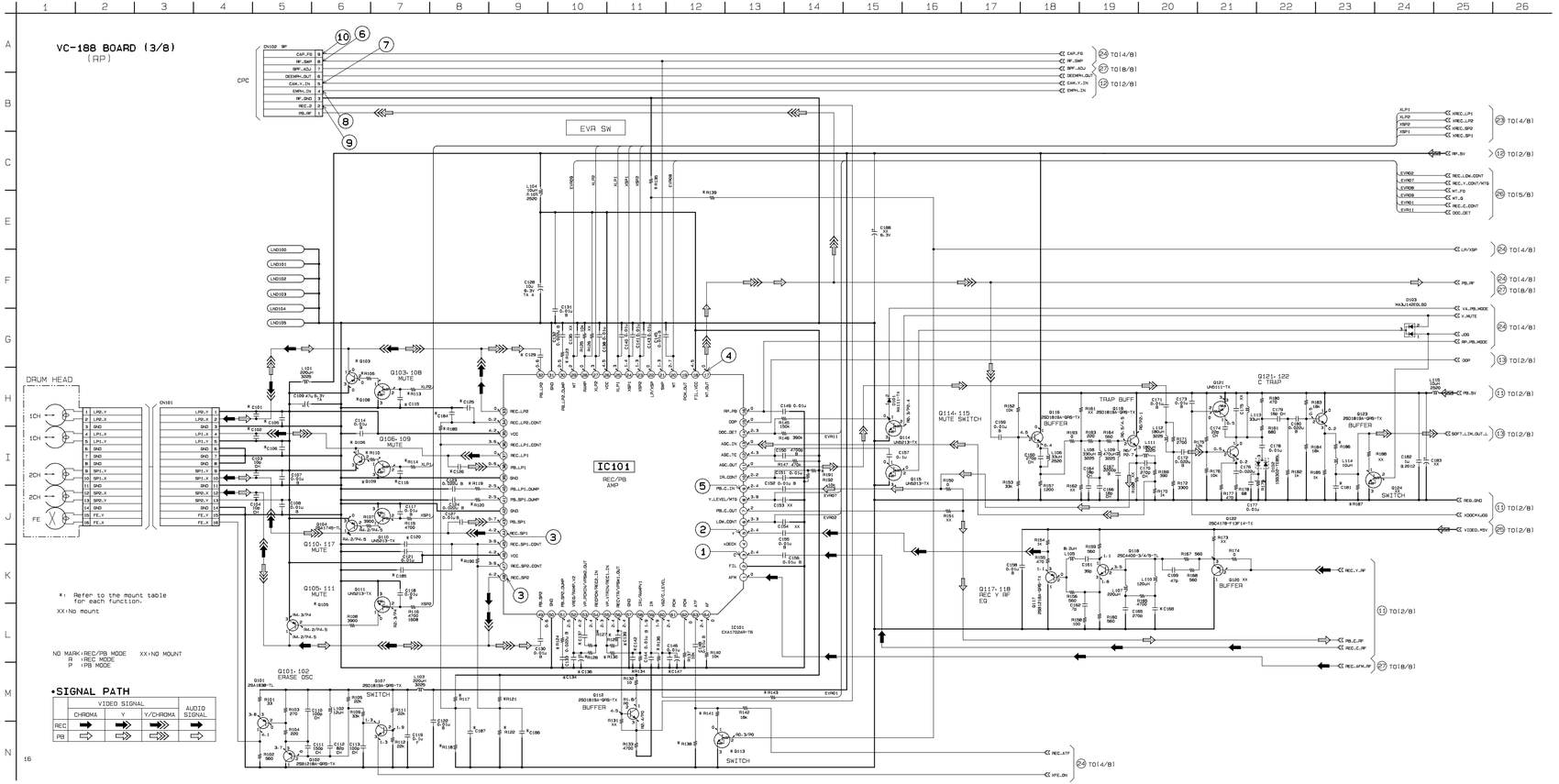

Date	: 96.09.17							
Ref.No	CXA1702 NTSC/ST	CXA1702 NTSC/MONO	CXA1702 PAL/ST	CXA1702 PAL/MONO	CXA20B4 NTSC/ST	CXA20B4 NTSC/MONO	CXA20B4 PAL/ST	CXA20B4 PAL/MONO
C101	10p	10p	XX	XX	10p	10p	XX	XX
C102	10p	10p	XX	XX	10p	10p	XX	XX
C105	0.01u	0.01u	XX	XX	0.01u	0.01u	XX	XX
C106	0.01u	0.01u	XX	XX	0.01u	0.01u	XX	XX
C115	0.01u	0.01u	XX	XX	0.01u	0.01u	XX	XX
C116	0.01u	0.01u	XX	XX	0.01u	0.01u	XX	XX
C120	0.01u	0.01u	0.01u	0.01u	18k	18k	18k	18k
C125	0.01u	0.01u	XX	XX	18k	18k	XX	XX
C126	0.01u	0.01u	XX	XX	0.01u	0.01u	XX	XX
C129	0.01u	0.01u	XX	XX	0.01u	0.01u	XX	XX
C134	0.01u	0.01u	0.01u	0.01u	0.1u	0.1u	0.1u	0.1u
C136	10u	10u	10u	10u	XX	XX	XX	XX
C137	XX	XX	XX	XX	0.01u	0.01u	0.01u	0.01u
C139	330p	330p	330p	330p	0.01u	0.01u	0.01u	0.01u
C142	0.01u	0.01u	0.01u	0.01u	0.1u	0.1u	0.1u	0.1u
C147	10u	10u	10u	10u	XX	XX	XX	XX
C168	82p	100p	82p	100p	82p	100p	82p	100p
C181	39p	39p	47p	47p	39p	39p	47p	47p
C184	XX	XX	XX	XX	0.001u	0.001u	0.001u	0.001u
C185	XX	XX	XX	XX	0.001u	0.001u	0.001u	0.001u
C186	XX	XX	XX	XX	0.001u	0.001u	0.001u	0.001u
C187	XX	XX	XX	XX	0.001u	0.001u	0.001u	0.001u
Q103	2SA1745-TL	2SA1745-TL	XX	XX	2SA1745-TL	2SA1745-TL	XX	XX
Q106	2SA1745-TL	2SA1745-TL	XX	XX	2SA1745-TL	2SA1745-TL	XX	XX
Q108	UN5213-TX	UN5213-TX	XX	XX	UN5213-TX	UN5213-TX	XX	XX
Q109	UN5213-TX	UN5213-TX	XX	XX	UN5213-TX	UN5213-TX	XX	XX
Q113	XX	XX	UN5213-TX	UN5213-TX	XX	XX	UN5213-TX	UN5213-TX
R106	3900	3900	XX	XX	3900	3900	XX	XX
R110	3900	3900	XX	XX	3900	3900	XX	XX
R113	4700	4700	XX	XX	4700	4700	XX	XX
R114	4700	4700	XX	XX	4700	4700	XX	XX
R117	6800	6800	6800	6800	XX	XX	XX	XX
R118	27k	27k	27k	18k	18k	18k	18k	18k
R119	560	560	560	560	820	820	820	820
R120	560	560	560	560	820	820	820	820
R121	6800	6800	6800	6800	XX	XX	XX	XX
R122	27k	27k	27k	18k	18k	18k	18k	18k
R123	560	560	560	560	820	820	820	820
R124	560	560	560	560	820	820	820	820
R127	XX	XX	XX	XX	1500	1500	1500	1500
R128	XX	XX	XX	XX	47k	47k	47k	47k
R129	0	0	0	0	1500	1500	1500	1500
R130	XX	XX	XX	XX	47k	47k	47k	47k
R134	15k	15k	15k	15k	XX	XX	XX	XX
R135	XX	XX	1k	1k	XX	XX	1k	1k
R136	18k	18k	18k	18k	100k	100k	100k	100k
R139	0	0	XX	XX	0	0	XX	XX
R141	XX	XX	8200	8200	XX	XX	8200	8200
R143	XX	XX	XX	XX	0	0	0	0
R186	100	100	39	39	100	100	39	39
R187	1500	1500	1800	1800	1500	1500	1800	1800
R189	0	0	XX	XX	XX	XX	XX	XX
R190	0	0	0	0	XX	XX	XX	XX
R191	10k	10k	10k	10k	22k	22k	22k	22k

VC-188 BOARD (3/8)

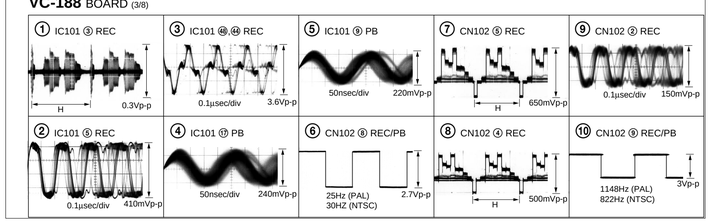

VC-188 (MODE CONTROL), FP-249 (MODE SENSOR) PRINTED WIRING BOARD AND SCHEMATIC DIAGRAM
— Ref. No. VC-188 Board; 1,000 Series, FP-249 Board; 5,000 Series —

• See page 4-5 for VC-188 BOARD printed wiring board.

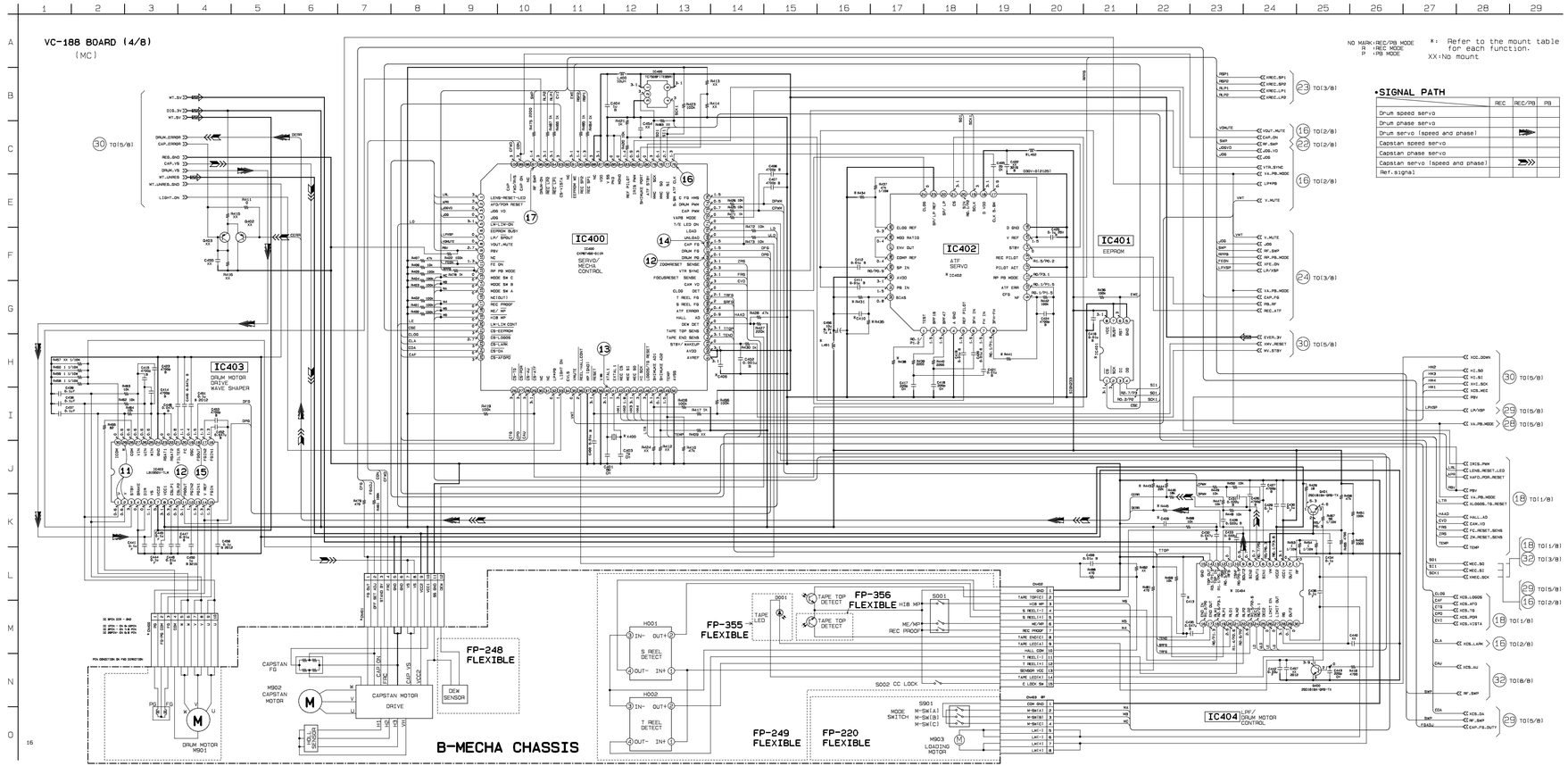

Ref.No	ATFSONY NT	ATFSONY PAL	ATFFUJI NT	ATFFUJI PAL	ATFEXAR NT	ATFEXAR PAL
C409	XX	0.001u	XX	0.001u	XX	XX
C410	XX	XX	XX	XX	150p	150p
C413	XX	0.001u	XX	0.001u	XX	XX
IC401	S-29L353AF	S-29L353AF	AK6440AM-E	AK6440AM-E	AK6440AM-E	AK6440AM-E
IC402	CXA1814Q-T	CXA1814Q-T	MB4470APFQ	MB4470APFQ	XR1083ACQ-	XR1083ACQ-
IC404	LB8112V-TL	TA8482FN-E	LB8112V-TL	TA8482FN-E	LB8112V-TL	LB8112V-TL
L401	47uH	47uH	10uH	10uH	10uH	10uH
L402	XX	XX	0	0	0	0
R431	XX	XX	XX	XX	100k	100k
R434	15k	15k	4700	4700	15k	15k
R435	XX	XX	0	0	XX	XX
R438	0	0	XX	XX	100k	100k
R441	22k	22k	22k	22k	33k	33k
R443	22k	XX	22k	XX	22k	22k
R445	10k	0	10k	0	10k	10k
X400	11.895104M	11.71875MH	11.895104M	11.71875MH	11.895104M	11.71875MH

VC-188 BOARD (4/8)

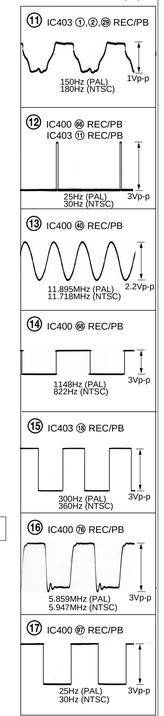

VC-188 (IN/OUT) SCHEMATIC DIAGRAM
— Ref. No. VC-188 Board; 1,000 Series —

• See page 4-5 for VC-188 BOARD printed wiring board.

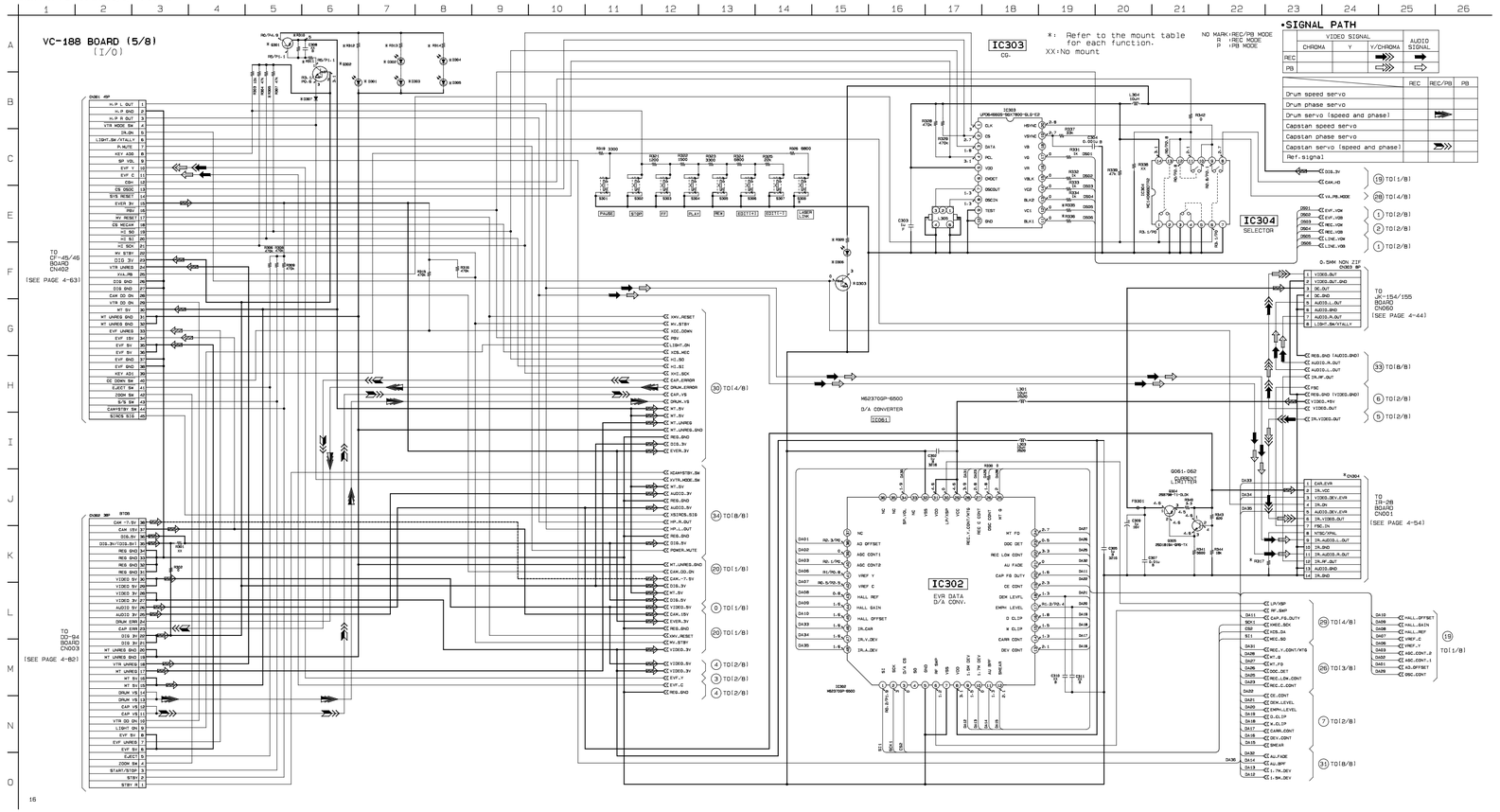

	NO IR NTSC/PAL	IR NTSC	IR PAL									
Date	: 96.11.11											
Ref.No	自照SW有 TR/IR無	自照SW有 TR/IR有/NT	自照SW有 V/IR無	自照SW有 V/IR有/NT	自照SW有 TR/IR有/PAL	自照SW有 V/IR有/PAL	自照SW無 TR/IR無	自照SW無 TR/IR有/NT	自照SW無 V/IR無	自照SW無 V/IR有/NT	自照SW無 TR/IR有/PAL	自照SW無 V/IR有/PAL
CN304	XX	14P	XX	14P	14P	XX	XX	14P	XX	14P	XX	14P
D301	TLYU1002	TLYU1002	TLYU1002	TLYU1002	TLYU1002	TLYU1002	XX	XX	XX	XX	XX	XX
D302	TLYU1002	TLYU1002	TLYU1002	TLYU1002	TLYU1002	TLYU1002	XX	XX	XX	XX	XX	XX
D303	TLYU1002	TLYU1002	TLYU1002	TLYU1002	TLYU1002	TLYU1002	XX	XX	XX	XX	XX	XX
D304	TLYU1002	TLYU1002	TLYU1002	TLYU1002	TLYU1002	TLYU1002	XX	XX	XX	XX	XX	XX
D305	TLYU1002	TLYU1002	TLYU1002	TLYU1002	TLYU1002	TLYU1002	XX	XX	XX	XX	XX	XX
D306	XX	TLSU1002	XX	TLSU1002	TLSU1002	TLSU1002	XX	TLSU1002	XX	TLSU1002	TLSU1002	TLSU1002
D307	MA111-TX	MA111-TX	MA111-TX	MA111-TX	MA111-TX	MA111-TX	XX	XX	XX	XX	XX	XX
Q301	2SB1295-UL	2SB1295-UL	2SB1295-UL	2SB1295-UL	2SB1295-UL	2SB1295-UL	XX	XX	XX	XX	XX	XX
Q302	UN5213-TX	UN5213-TX	UN5213-TX	UN5213-TX	UN5213-TX	UN5213-TX	XX	XX	XX	XX	XX	XX
Q303	XX	UN5213-TX	XX	UN5213-TX	UN5213-TX	UN5213-TX	XX	UN5213-TX	XX	UN5213-TX	UN5213-TX	UN5213-TX
R310	47k	47k	47k	47k	47k	47k	XX	XX	XX	XX	XX	XX
R311	470	470	470	470	470	470	XX	XX	XX	XX	XX	XX
R312	150	150	150	150	150	150	XX	XX	XX	XX	XX	XX
R313	47	47	47	47	47	47	XX	XX	XX	XX	XX	XX
R314	47	47	47	47	47	47	XX	XX	XX	XX	XX	XX
R317	XX	XX	XX	XX	0	XX	XX	XX	XX	XX	0	0
R320	XX	150	XX	150	150	150	XX	XX	XX	150	150	150
R335	1k	1k	XX	XX	1k	XX	1k	1k	XX	XX	1k	XX
R336	1k	1k	XX	XX	1k	XX	1k	1k	XX	XX	1k	XX
S308	XX	XX	XX	XX	XX	XX	XX	XX	XX	XX	XX	XX

IN/OUT
VC-188 (5/8)

VC-188 (LD) SCHEMATIC DIAGRAM
— Ref. No. VC-188 Board; 1,000 Series —

• See page 4-5 for VC-188 BOARD printed wiring board.

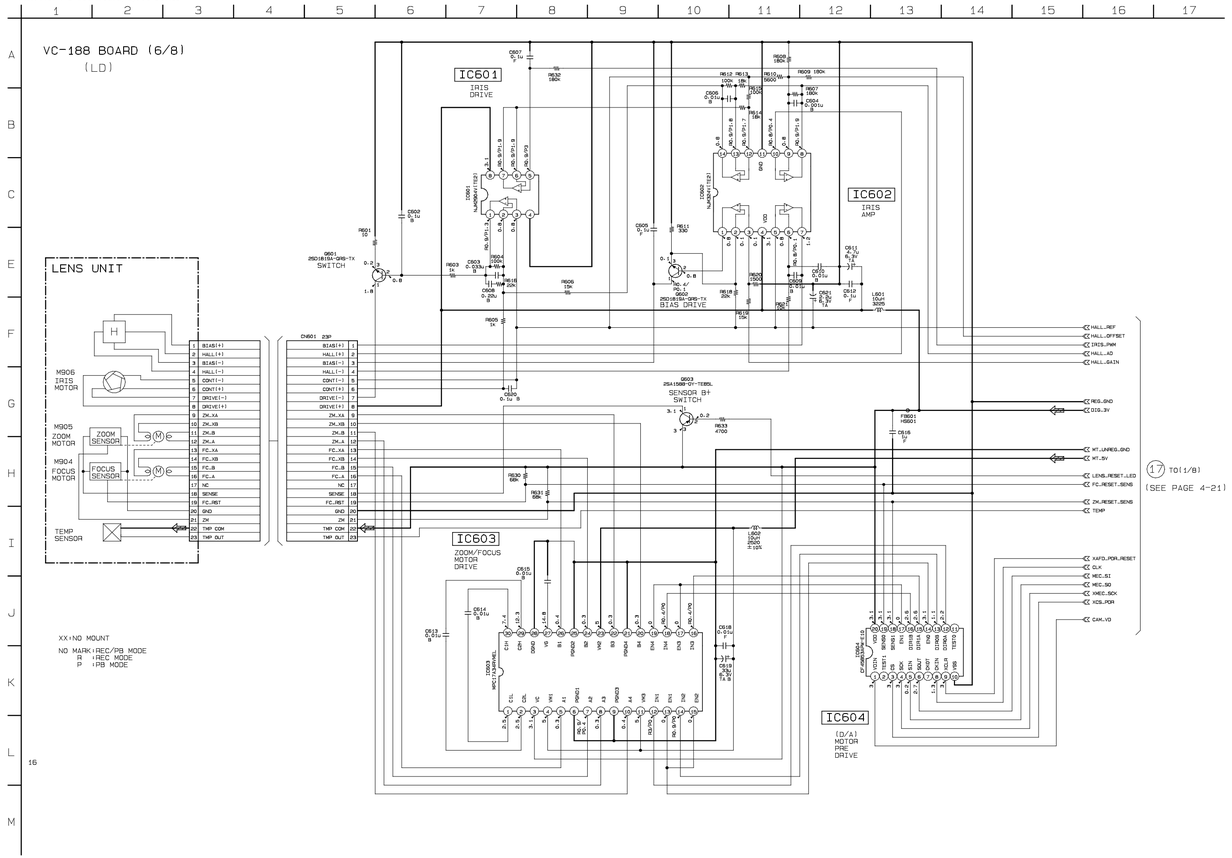

VC-188 (PJ) SCHEMATIC DIAGRAM
— Ref. No. VC-188 Board; 1,000 Series —

• See page 4-5 for VC-188 BOARD printed wiring board.

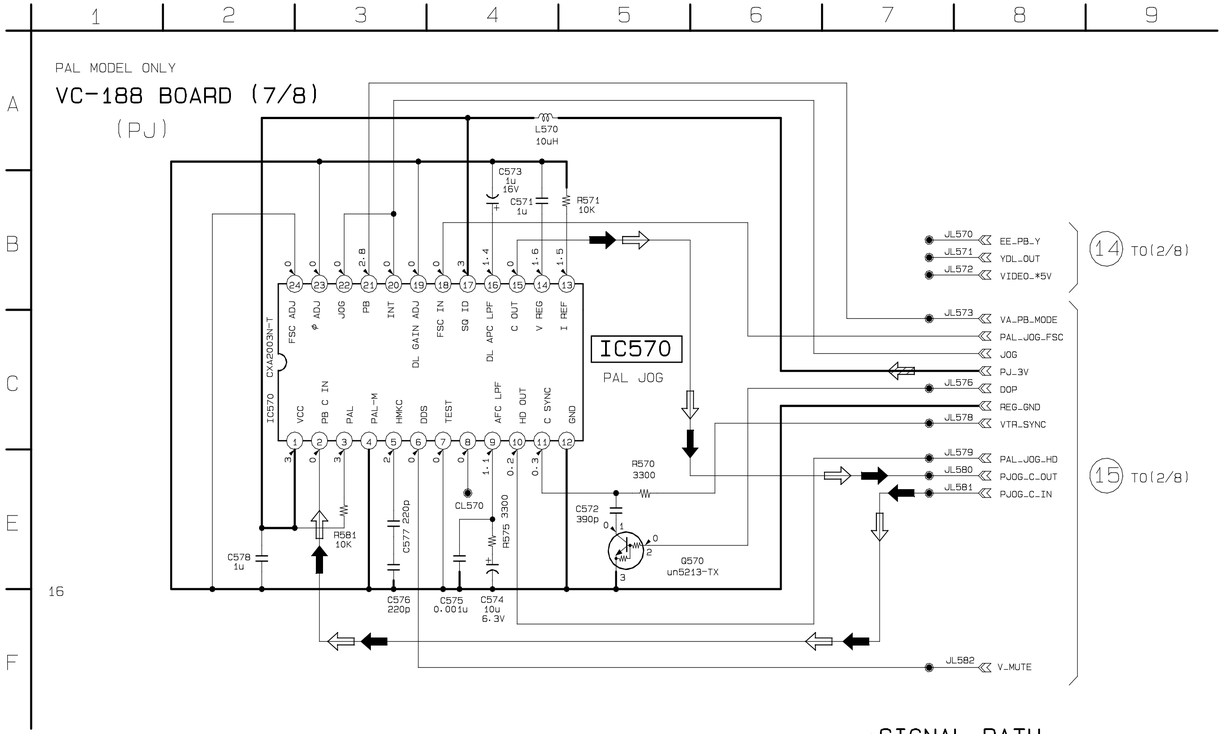

•SIGNAL PATH

	VIDEO SIGNAL			AUDIO SIGNAL
	CHROMA	Y	Y/CHROMA	
REC	➡			
PB	⇨			

VC-188 (AUDIO) SCHEMATIC DIAGRAM

— Ref. No. VC-188 Board; 1,000 Series —

• See page 4-5 for VC-188 BOARD printed wiring board.

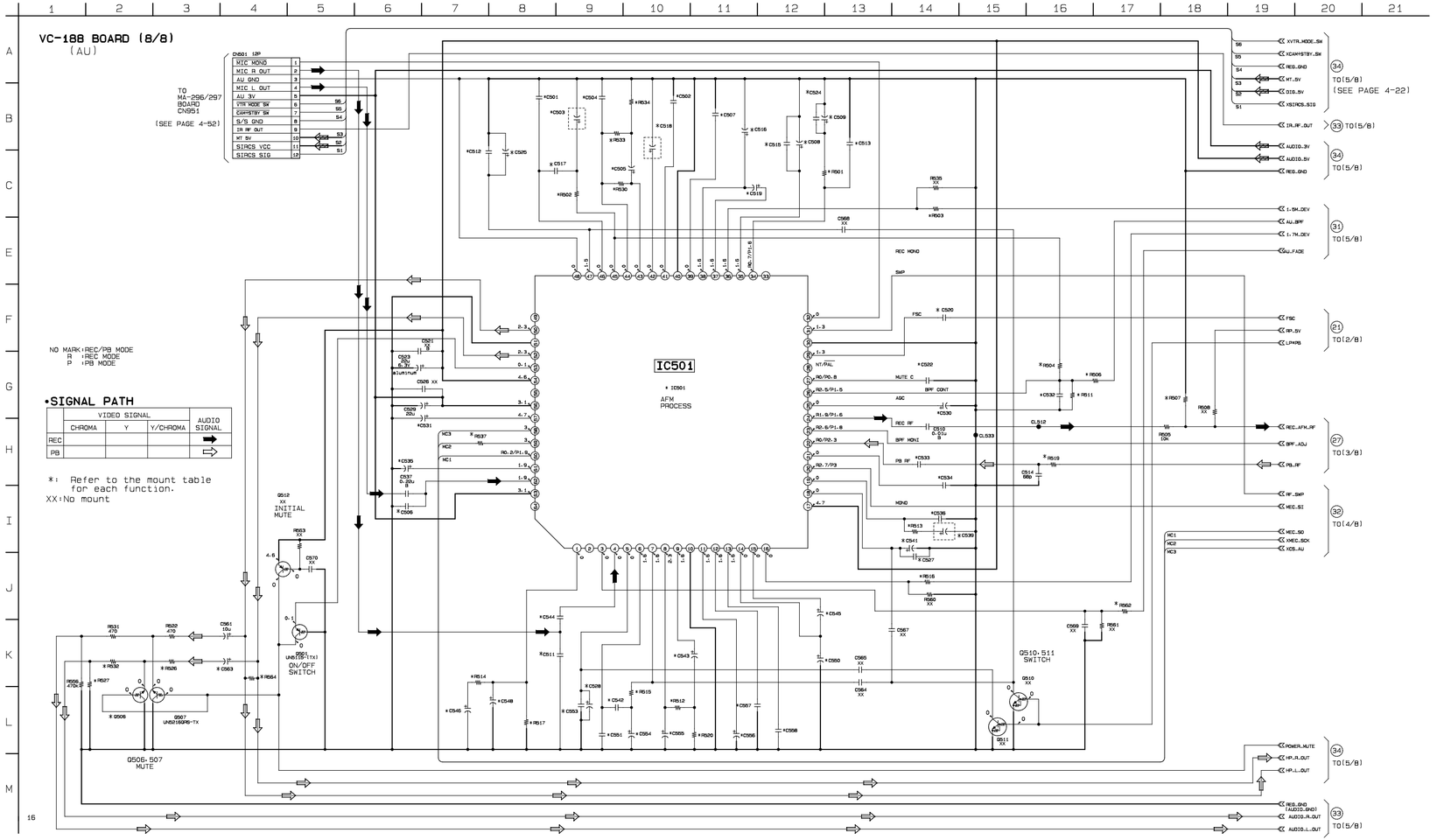

Date	: 96.09.18					
Ref.No	PANA/ST NT	PANA/MO NT	SONY/ST NT	SONY/MO NT	SANYO/ST NT	SANYO/MO NT
C501	XX	XX	0.001u	XX	0.01u	XX
C502	0.01u	0.01u	0.22u	XX	0.01u	XX
C503	XX	XX	XX	XX	4.7u	XX
C504	XX	XX	0.001u	0.001u	0.47u	XX
C505	47u	XX	4.7u	47u	10u	XX
C507	0.47u	XX	1u	XX	6800p	XX
C508	2.2u	3.3u	XX	XX	XX	XX
C509	22u	22u	0.47u	0.47u	XX	XX
C512	4700p	4700p	XX	XX	XX	XX
C513	XX	XX	0.22u	0.22u	0.1u	0.1u
C515	XX	XX	XX	220p	2200p	2200p
C516	2.2u	XX	22u	XX	XX	XX
C517	0.47u	XX	XX	XX	XX	XX
C518	2.2u	0.01u	4.7u	XX	4.7u	XX
C519	XX	XX	XX	XX	4.7u	4.7u
C522	0.01u	0.01u	680p	680p	0.022u	0.022u
C524	XX	XX	XX	XX	0.1u	0.1u
C525	XX	XX	XX	XX	22u	10u
C527	XX	XX	680p	XX	2200p	XX
C528	XX	XX	1u	XX	22u	XX
C530	10u	10u	10u	XX	XX	XX
C531	47u	33u	XX	47u	33u	33u
C533	0.01u	0.01u	0.01u	0.01u	0	0
C534	0.01u	XX	3300p	3300p	0.47u	XX
C535	33u	33u	22u	10u	33u	22u
C536	XX	XX	0.22u	XX	0.1u	XX
C539	22u	XX	0.47u	XX	0.1u	XX
C541	2.2u	XX	XX	10u	XX	XX
C542	0.47u	0.47u	XX	XX	XX	XX
C543	47u	47u	1u	4.7u	10u	10u
C544	0.22u	XX	0.22u	XX	0.22u	XX
C545	XX	XX	XX	XX	4.7u	XX
C546	47u	100u	47u	47u	33u	33u
C548	4.7u	22u	4.7u	15u	10u	10u
C550	2.2u	2.2u	22u	22u	XX	XX
C551	XX	XX	47k	47k	0.01u	0.01u
C553	4700p	XX	XX	XX	XX	XX
C554	XX	XX	10u	4.7u	4.7u	4.7u
C555	XX	XX	10u	10u	0.47u	0.47u
C556	2.2u	2.2u	4.7u	4.7u	4.7u	4.7u
C557	0.01u	0.01u	0.22u	0.22u	0.01u	0.01u
C558	0.47u	0.47u	1u	1u	6800p	6800p
C563	10u	XX	10u	XX	XX	XX
IC501	AN2980FH-E	AN3996FHP-	CXA1737R-	CXA2038R	LA7494W-TB	LA7457W-TB
Q506	UN5216QRS-	XX	UN5216QRS-	XX	UN5216QRS-	XX
R501	4700	5600	470k	470k	3.3M	3.3M
R502	1800	XX	XX	XX	0	XX
R503	120k	100k	82k	0	150k	150k
R504	XX	XX	0	XX	XX	XX
R506	120k	220k	82k	82k	82k	180k
R507	6800	6800	6800	8200	6800	6800
R511	15k	22k	XX	XX	XX	680k
R512	0	0	XX	XX	XX	XX
R513	4700	XX	470k	XX	3.3M	XX
R514	10k	22k	10k	6800	10k	10k
R515	220	4700	0	0	0	0
R516	120k	XX	82k	XX	120k	XX
R517	470k	1M	470k	100k	1M	1M
R520	XX	XX	0	0	0	0
R526	470	XX	470	XX	470	XX
R527	470k	XX	470k	XX	470k	XX
R530	XX	XX	XX	1M	XX	XX
R532	470	XX	470	XX	470	XX
R533	0	XX	XX	XX	XX	XX
R534	XX	XX	0	0	0	XX
R537	4700	0	0	0	0	0
R562	0	0	0	0	0	0
R564	XX	0	XX	0	XX	0

CD-164/165 (CCD IMAGER) PRINTED WIRING BOARD AND SCHEMATIC DIAGRAM
— Ref. No. CD-164/165 Board; 2,000 Series —

There are few cases that the part printed on this diagram isn't mounted in this model.

CD-164/165 BOARD

① IC401 ①, ② REC

② IC401 ③, ④ REC

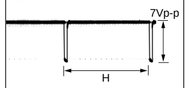

③ IC401 ⑦ REC

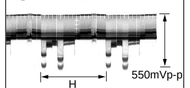

④ IC401 ⑯ REC

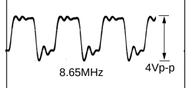

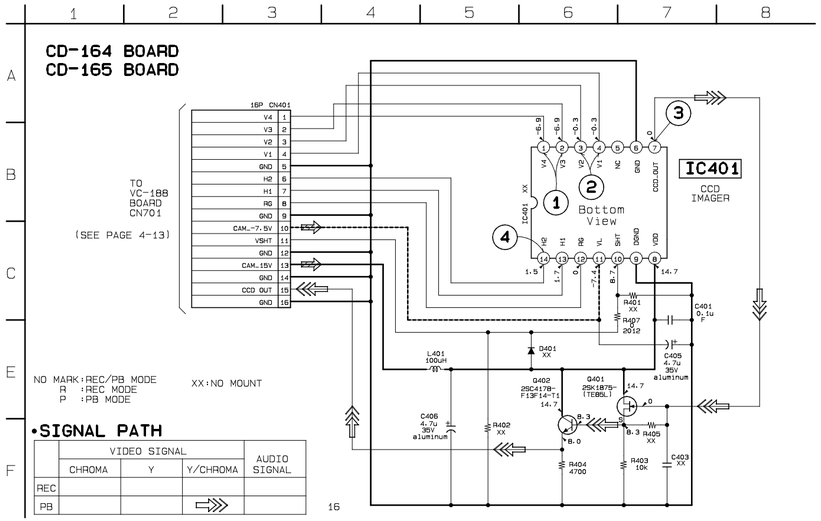

Precautions Upon Replacing CCD Imager

- The CD-164/165 board mounted as a repair part is not equipped with a CCD imager.
  When replacing this board, remove the CCD imager from the old one and mount it onto the new one.
- If the CCD imager has been replaced, carry out all the adjustments for the camera section.
- As the CCD imager may be damaged by static electricity from its structure, handle it carefully like for the MOS IC.
  In addition, ensure that the receiver is not covered with dusts nor exposed to strong light.

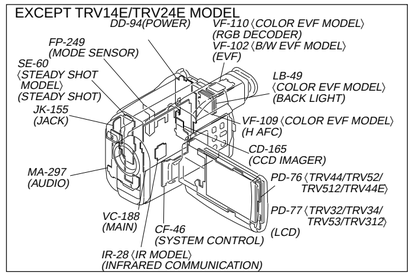

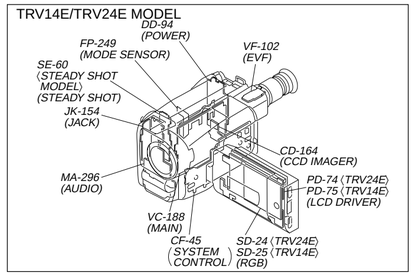

JK-154/155 (JACK) PRINTED WIRING BOARD AND SCHEMATIC DIAGRAM
— Ref. No. JK-154/155 Board; 2,000 Series —

There are few cases that the part printed on this diagram isn't mounted in this model.

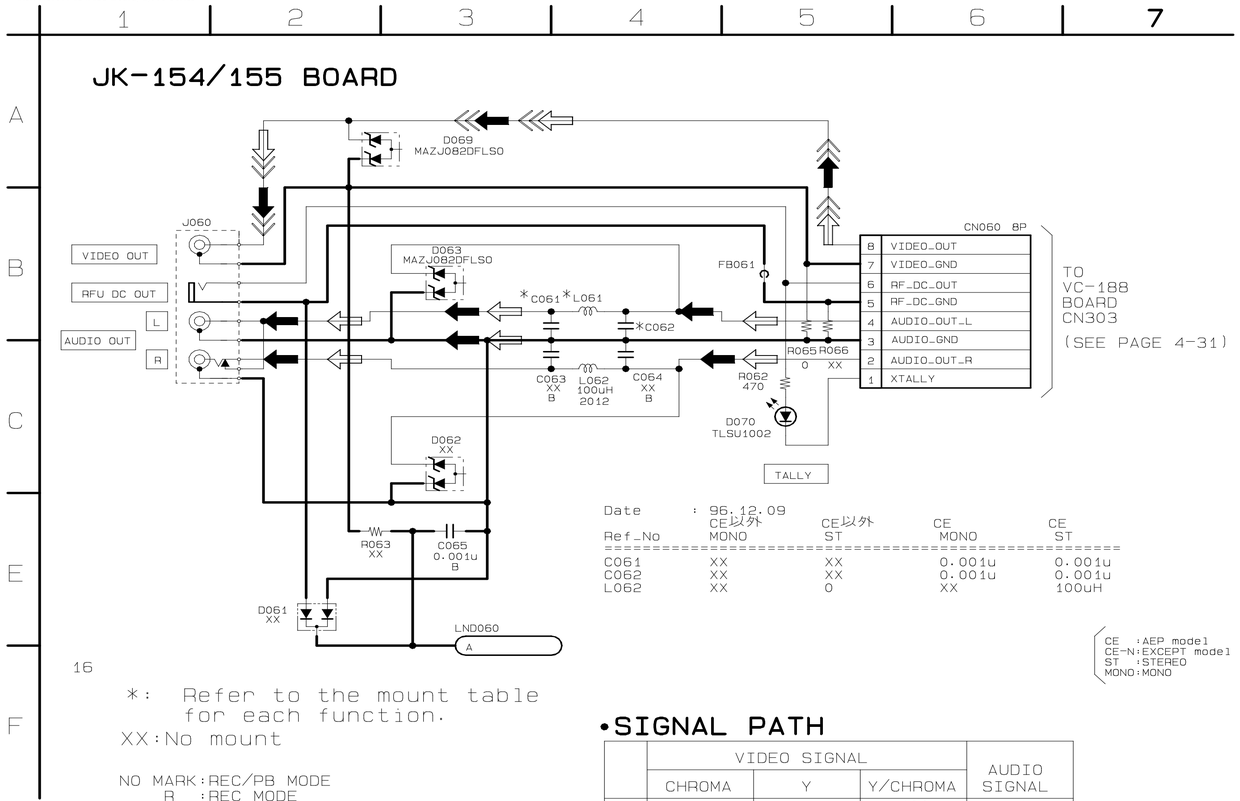

Date : 96.12.09

Ref_No	CE以外 MONO	CE以外 ST	CE MONO	CE ST
C061	XX	XX	0.001u	0.001u
C062	XX	XX	0.001u	0.001u
L062	XX	0	XX	100uH

CE :AEP model
CE-N:EXCEPT model
ST :STEREO
MONO:MONO

•SIGNAL PATH

	VIDEO SIGNAL			AUDIO SIGNAL
	CHROMA	Y	Y/CHROMA	
REC			➡	➡
PB			⇨	⇨

EXCEPT TRV14E/TRV24E MODEL

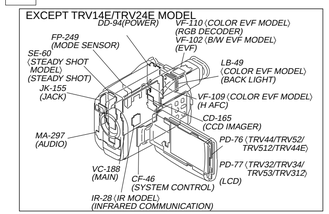

TRV14E/TRV24E MODEL

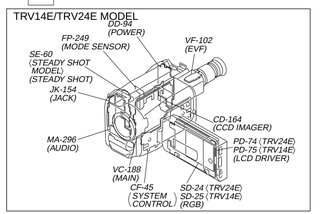

MA-296/297 (AUDIO) SCHEMATIC DIAGRAM

— Ref. No. MA-296/297 Board; 2,000 Series —

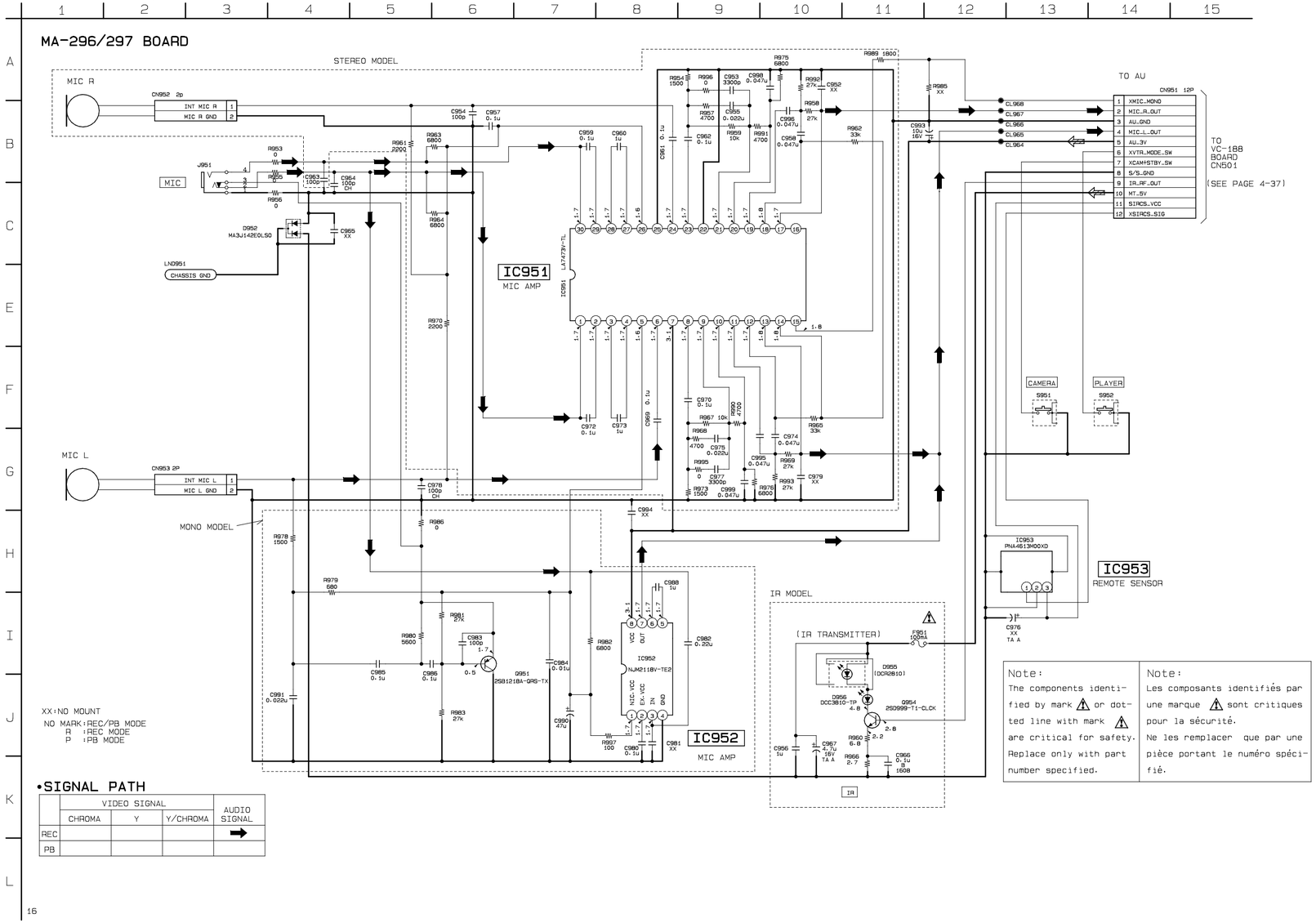

Note:
The components identified by mark ⚠ or dotted line with mark ⚠ are critical for safety. Replace only with part number specified.

Note:
Les composants identifiés par une marque ⚠ sont critiques pour la sécurité. Ne les remplacer que par une pièce portant le numéro spécifié.

•SIGNAL PATH

	VIDEO SIGNAL			AUDIO SIGNAL
	CHROMA	Y	Y/CHROMA	
REC				➡
PB				

IR MODEL

IR-28 (INFRARED COMMUNICATION) PRINTED WIRING BOARD AND SCHEMATIC DIAGRAM
— Ref. No. IR-28 Board; 1,000 Series —

There are few cases that the part printed on this diagram isn't mounted in this model.

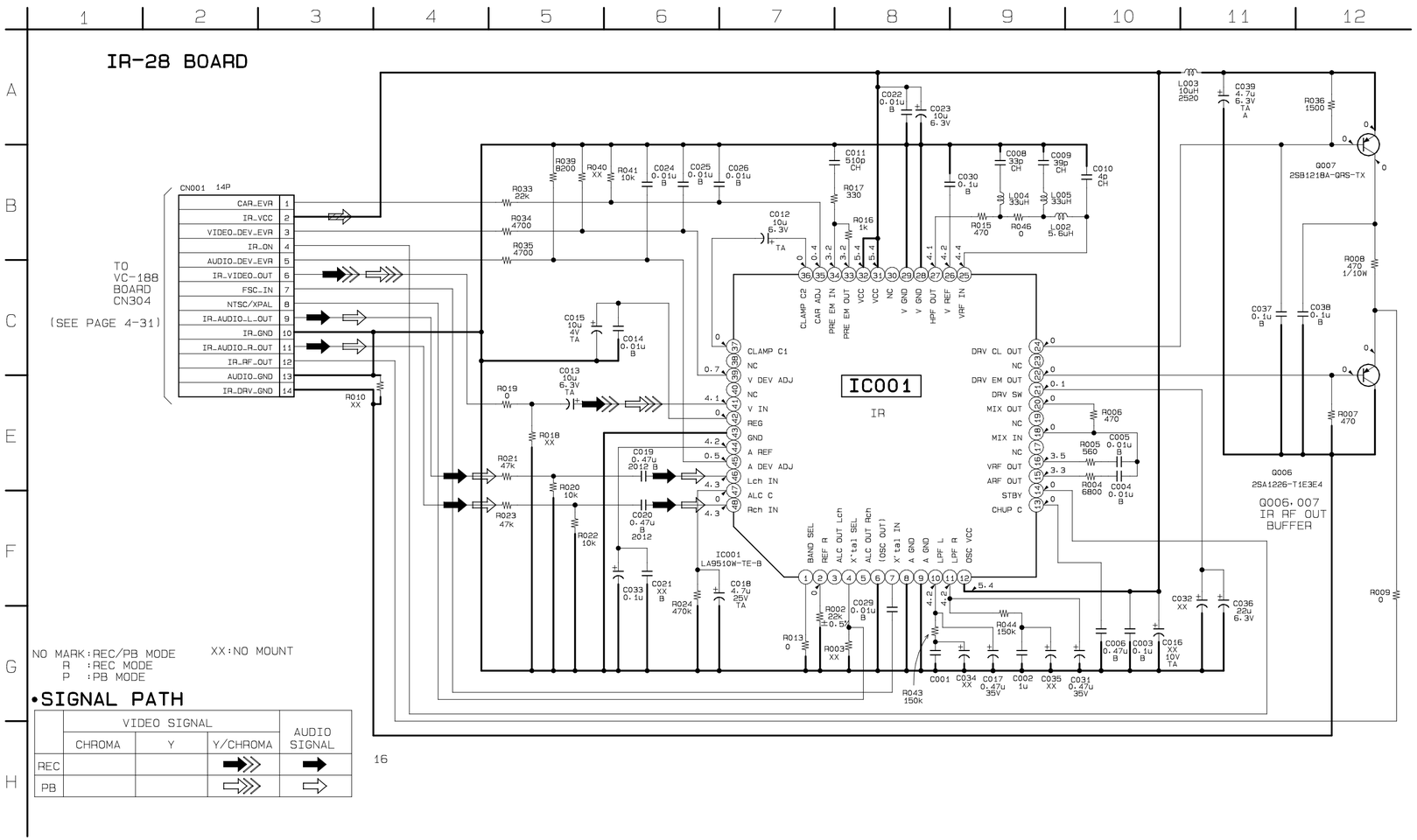

•SIGNAL PATH

	VIDEO SIGNAL			AUDIO SIGNAL
	CHROMA	Y	Y/CHROMA	
REC			➡	➡
PB			⇨	⇨

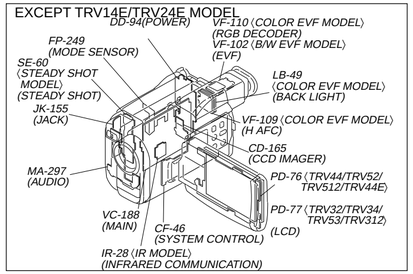

CF-45/46 (SYSTEM CONTROL) SCHEMATIC DIAGRAM

• See page 4-57 for CF-45 BOARD printed wiring board.

— Ref. No. CF-45/46 Board; 2,000 Series —

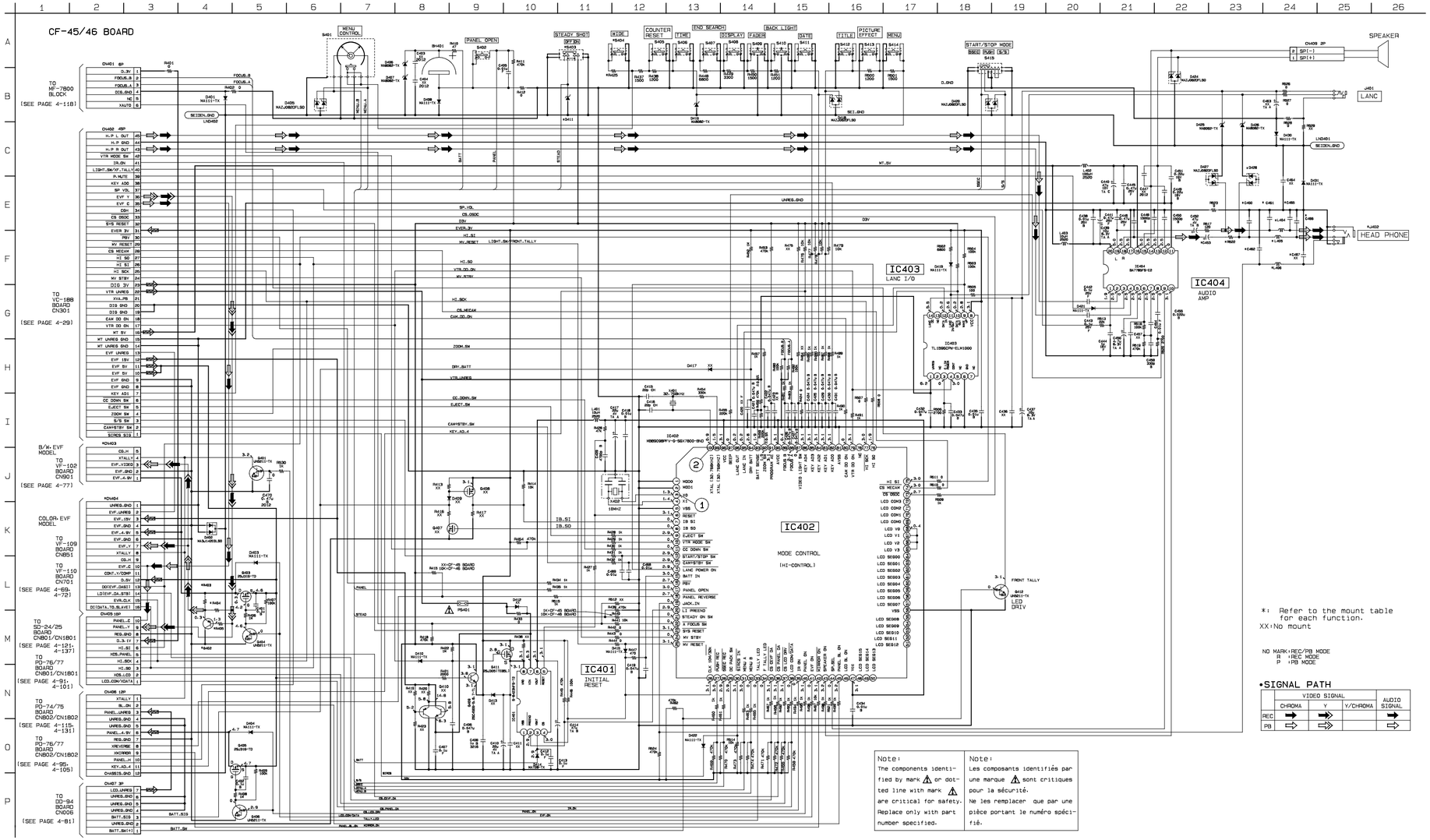

Note:	Note:
The components identified by mark ⚠ or dotted line with mark ⚠ are critical for safety. Replace only with part number specified.	Les composants identifiés par une marque ⚠ sont critiques pour la sécurité. Ne les remplacer que par une pièce portant le numéro spécifié.

*: Refer to the mount table for each function.
XX: No mount

NO MARK: REC/PB MODE
R : REC MODE
P : PB MODE

•SIGNAL PATH

	VIDEO SIGNAL			AUDIO SIGNAL
	CHROMA	Y	Y/CHROMA	
REC	➡	➡		➡
PB	⇨	⇨		⇨

CF-44/46 BOARD

① IC402 ③ REC/PB

② IC402 ㉔ REC/PB

COLOR EVF MODEL

VF-110 (RGB DECODER) SCHEMATIC DIAGRAMS

— Ref. No. VF-110 Board; 4,000 Series —

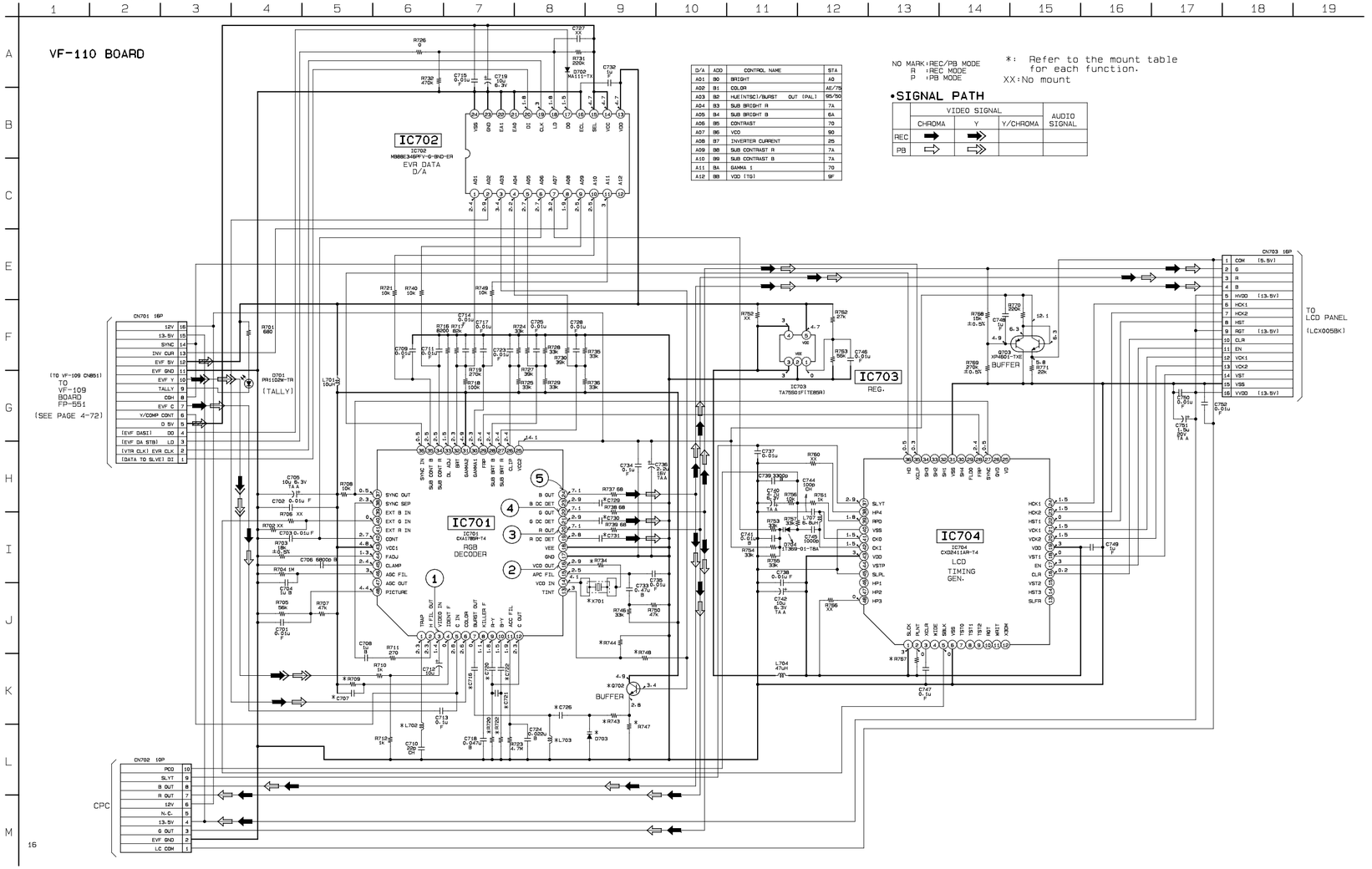

D/A	ADD	CONTROL NAME	STA
A01	B0	BRIGHT	A0
A02	B1	COLOR	AE/7E
A03	B2	HUE(NTSC)/BURST OUT (PAL)	95/50
A04	B3	SUB BRIGHT R	7A
A05	B4	SUB BRIGHT B	6A
A06	B5	CONTRAST	70
A07	B6	VCO	90
A08	B7	INVERTER CURRENT	25
A09	B8	SUB CONTRAST R	7A
A10	B9	SUB CONTRAST B	7A
A11	BA	GAMMA 1	70
A12	BB	VCO (TG)	9F

VF-110 BOARD

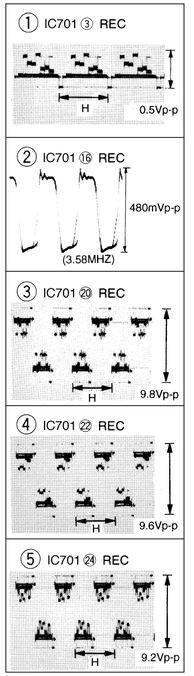

Date : 96.06.18	STD	STD
Ref_No	NT	PAL
C707	XX	680p
C716	XX	0.01u
C720	XX	0.01u
C721	XX	82p
C722	XX	0.01u
C726	XX	0.1u
C729	0.1u	3.3u
C730	0.1u	3.3u
C731	0.1u	3.3u
D703	XX	1T369-01-T
L702	82uH	56uH
L703	XX	27uH
Q702	XX	2SD1819A-Q
R709	XX	4.7M
R720	XX	6800
R722	XX	3300
R734	2200	1k
R743	XX	22k
R744	XX	0
R747	XX	4700
R748	0	XX
R767	XX	0
X701	3.579545MH	4.433619MH

COLOR EVF MODEL

VF-109 (H AFC), LB-49 (BACK LIGHT) SCHEMATIC DIAGRAMS
— Ref. No. VF-109 Board, LB-49 Board; 4,000 Series —

• See page 4-66 for VF-109 BOARD printed wiring board.

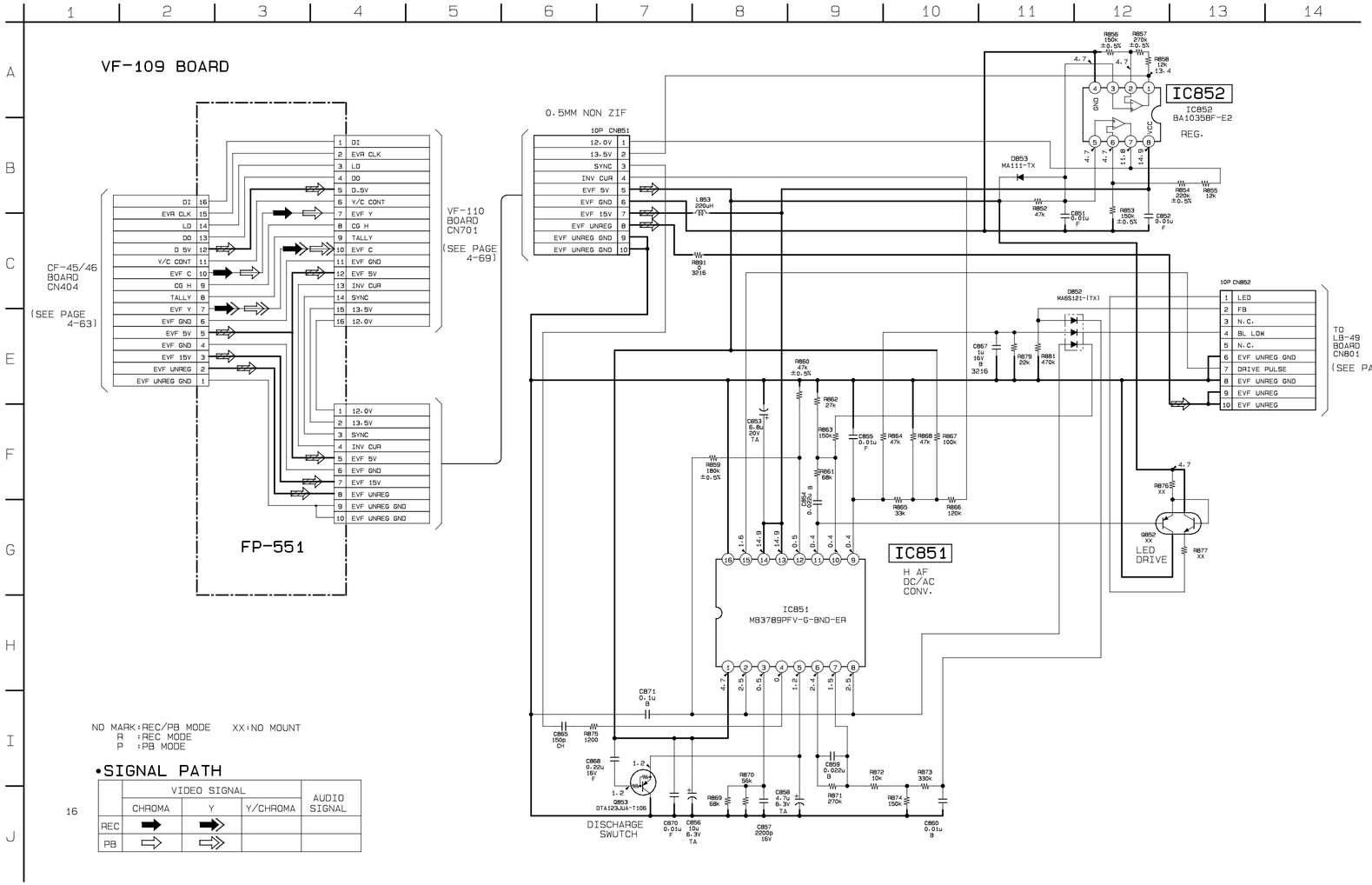

•SIGNAL PATH

	VIDEO SIGNAL			AUDIO SIGNAL
	CHROMA	Y	Y/CHROMA	
REC	⇨	⇨		
PB	⇨	⇨		

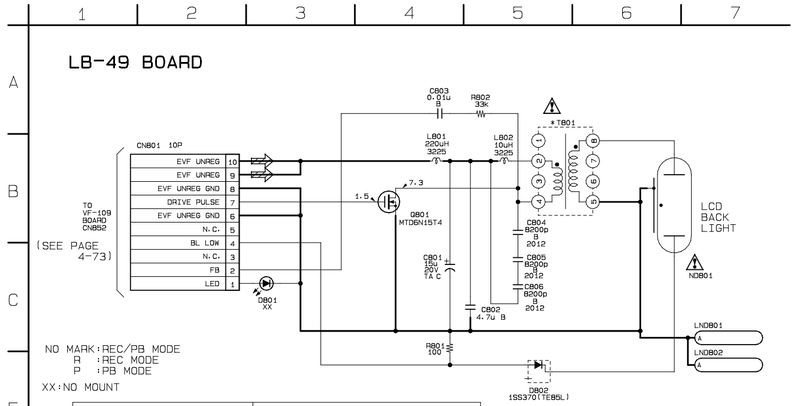

Note:	Note:
The components identified by mark ⚠ or dotted line with mark ⚠ are critical for safety. Replace only with part number specified.	Les composants identifiés par une marque ⚠ sont critiques pour la sécurité. Ne les remplacer que par une pièce portant le numéro spécifié.

DD-94 (POWER) SCHEMATIC DIAGRAM

— Ref. No. DD-94 Board; 1,000 Series —

Date : 96.07.17

Ref.No	STD NT/PN/LN	STD PAL/PN/LN	STD NT/PA/LN	STD PAL/PA/LN	STD NT/PN/LA	STD PAL/PN/LA
C049	XX	XX	XX	XX	0.22u	0.22u
CN005	XX	XX	3P	3P	3P	3P
F001	XX	XX	1.6A	XX	1.6A	XX
F002	XX	XX	XX	XX	XX	XX
F003	1.6A	1.6A	1.6A	1.6A	1.6A	1.6A
F004	1.6A	1.6A	1.6A	1.6A	1.6A	1.6A
Q010	XX	XX	XX	XX	2SK2316-TD	2SK2316-TD
Q012	XX	XX	XX	XX	2SK2316-TD	2SK2316-TD
Q013	XX	XX	XX	XX	2SK1829(TE	2SK1829(TE
Q014	XX	XX	XX	XX	UN5213-TX	UN5213-TX
R028	XX	XX	XX	XX	1M	1M
R029	XX	XX	XX	XX	820k	820k
R031	XX	XX	XX	XX	180k	180k
R032	XX	XX	0	0	XX	XX
R036	XX	XX	XX	XX	10k	10k
R042	XX	XX	XX	XX	33k	33k

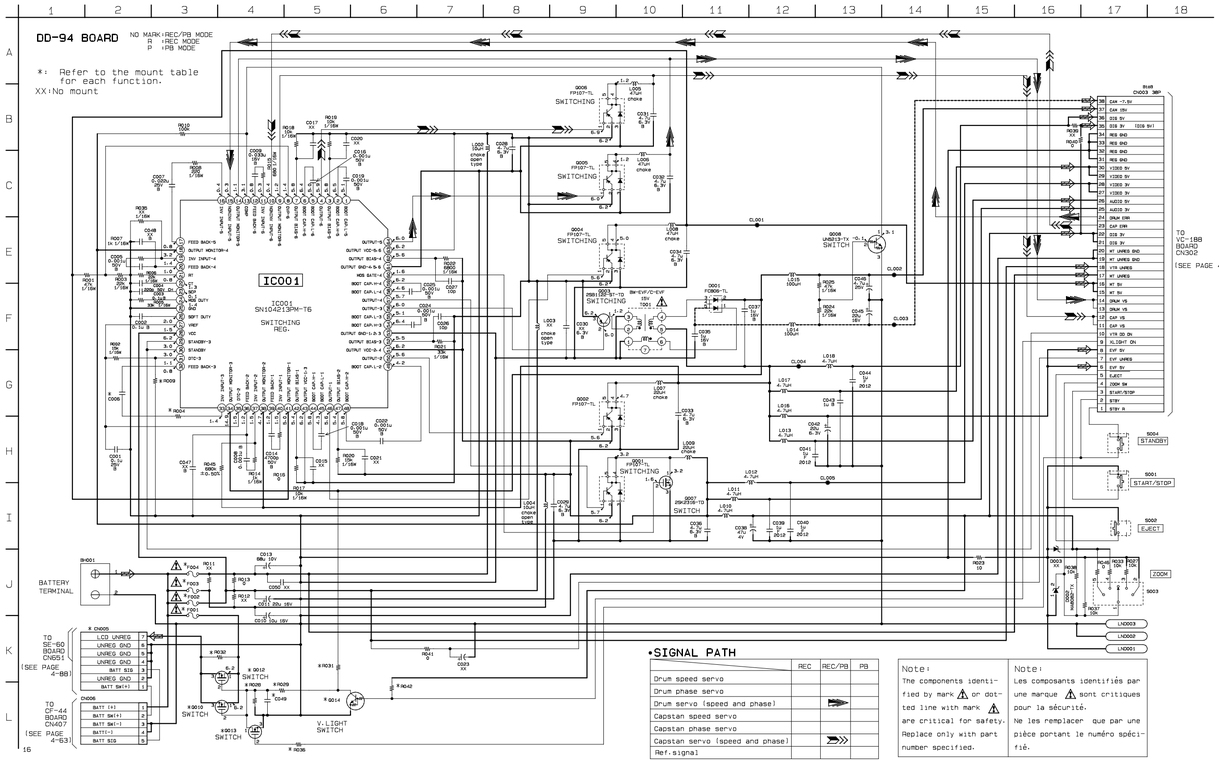

STEADY SHOT MODEL

SE-60 (STEADY SHOT) SCHEMATIC DIAGRAM

— Ref. No. SE-60 Board; 5,000 Series —

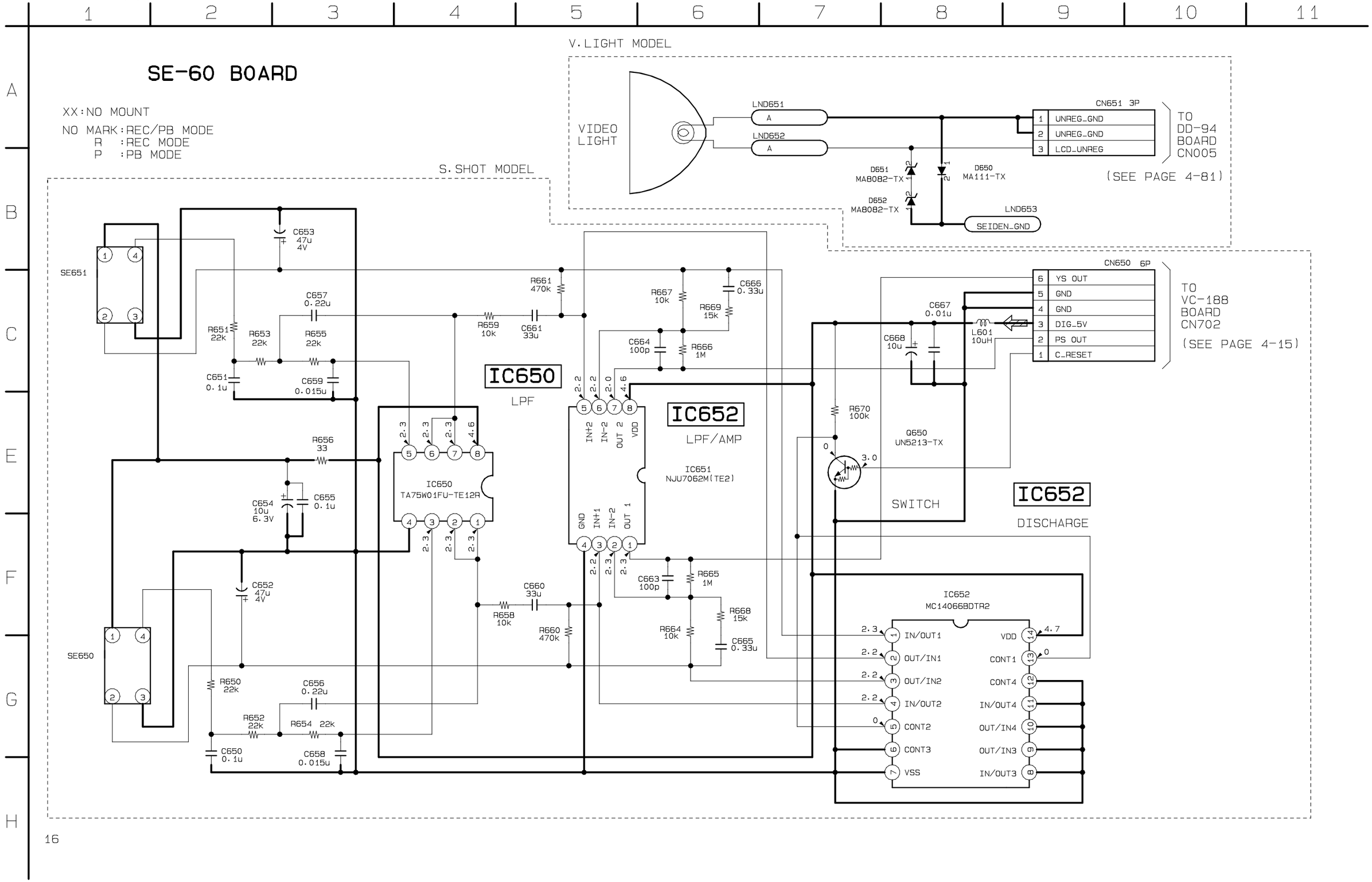

PD-76 (LCD) SCHEMATIC DIAGRAM
— Ref. No. PD-76 Board; 8,000 Series —

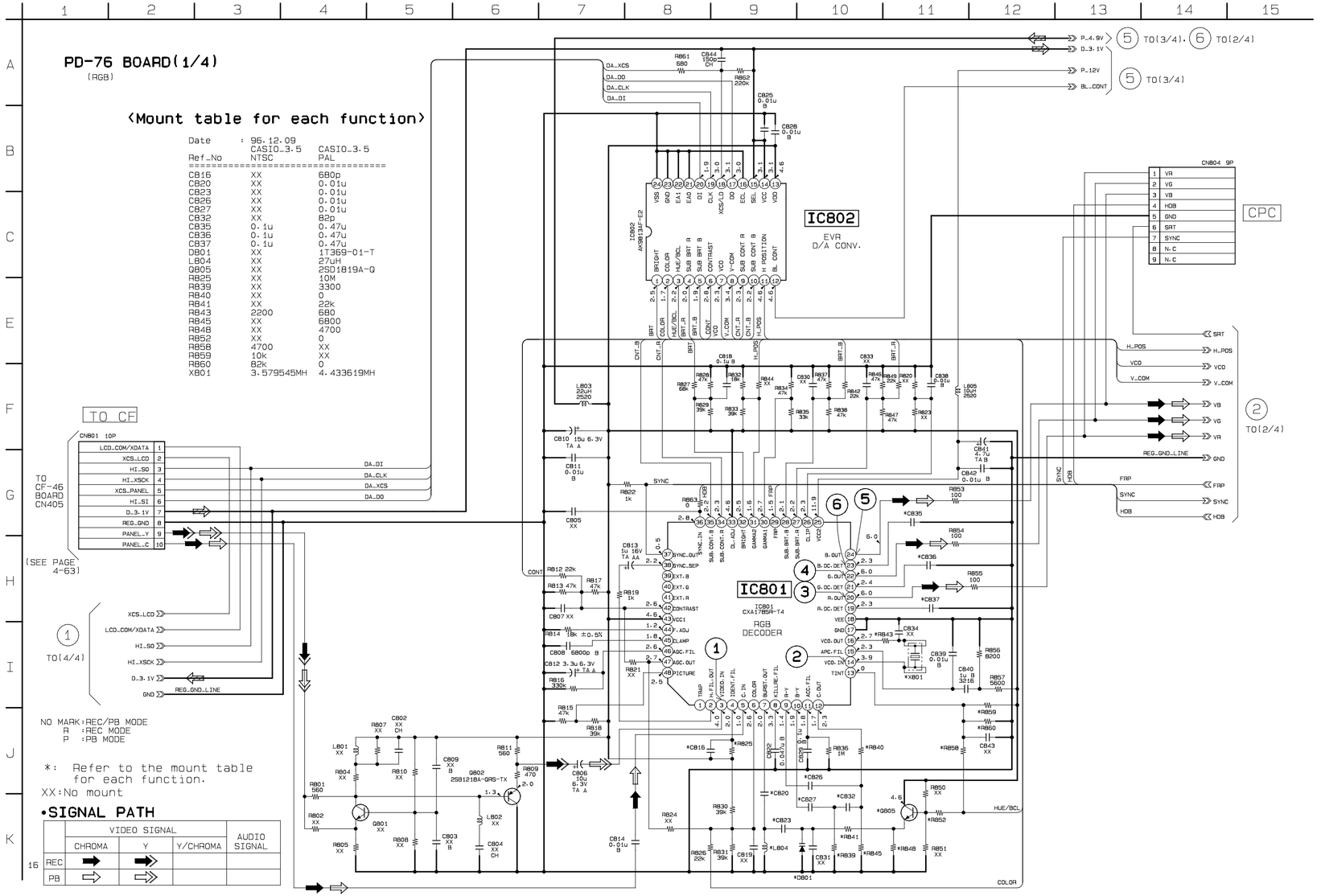

〈Mount table for each function〉

Date :	96.12.09	
	CASIO_3.5	CASIO_3.5
Ref_No	NTSC	PAL
C816	XX	680p
C820	XX	0.01u
C823	XX	0.01u
C826	XX	0.01u
C827	XX	0.01u
C832	XX	82p
C835	0.1u	0.47u
C836	0.1u	0.47u
C837	0.1u	0.47u
D801	XX	1T369-01-T
L804	XX	27uH
Q805	XX	2SD1819A-Q
R825	XX	10M
R839	XX	3300
R840	XX	0
R841	XX	22k
R843	2200	680
R845	XX	6800
R848	XX	4700
R852	XX	0
R858	4700	XX
R859	10k	XX
R860	82k	0
X801	3.579545MH	4.433619MH

PD-76 BOARD (1/4)

① IC801 ③ REC/PB
0.5Vp-p

② IC801 ⑭ REC/PB
4.43MHz (PAL) 560mVp-p
3.58MHz (NTSC)

③ IC801 ⑳ REC/PB
5.6Vp-p

④ IC801 ㉒ REC/PB
5.6Vp-p

⑤ IC801 ㉔ REC/PB
5.6Vp-p

⑥ IC801 ㉓ REC/PB
4.77MHz 3.5Vp-p

PD-76 (LCD) SCHEMATIC DIAGRAM
— Ref. No. PD-76 Board; 8,000 Series —

• See page 4-89 for PD-76 BOARD printed wiring board.

PD-76 BOARD (2/4)

⑦ IC901 ⑬ REC/PB

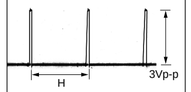

⑧ IC901 ㉖ REC/PB

⑨ IC901 ⑦ REC/PB

⑪ IC901 ㉝ REC/PB

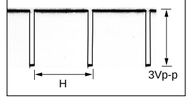

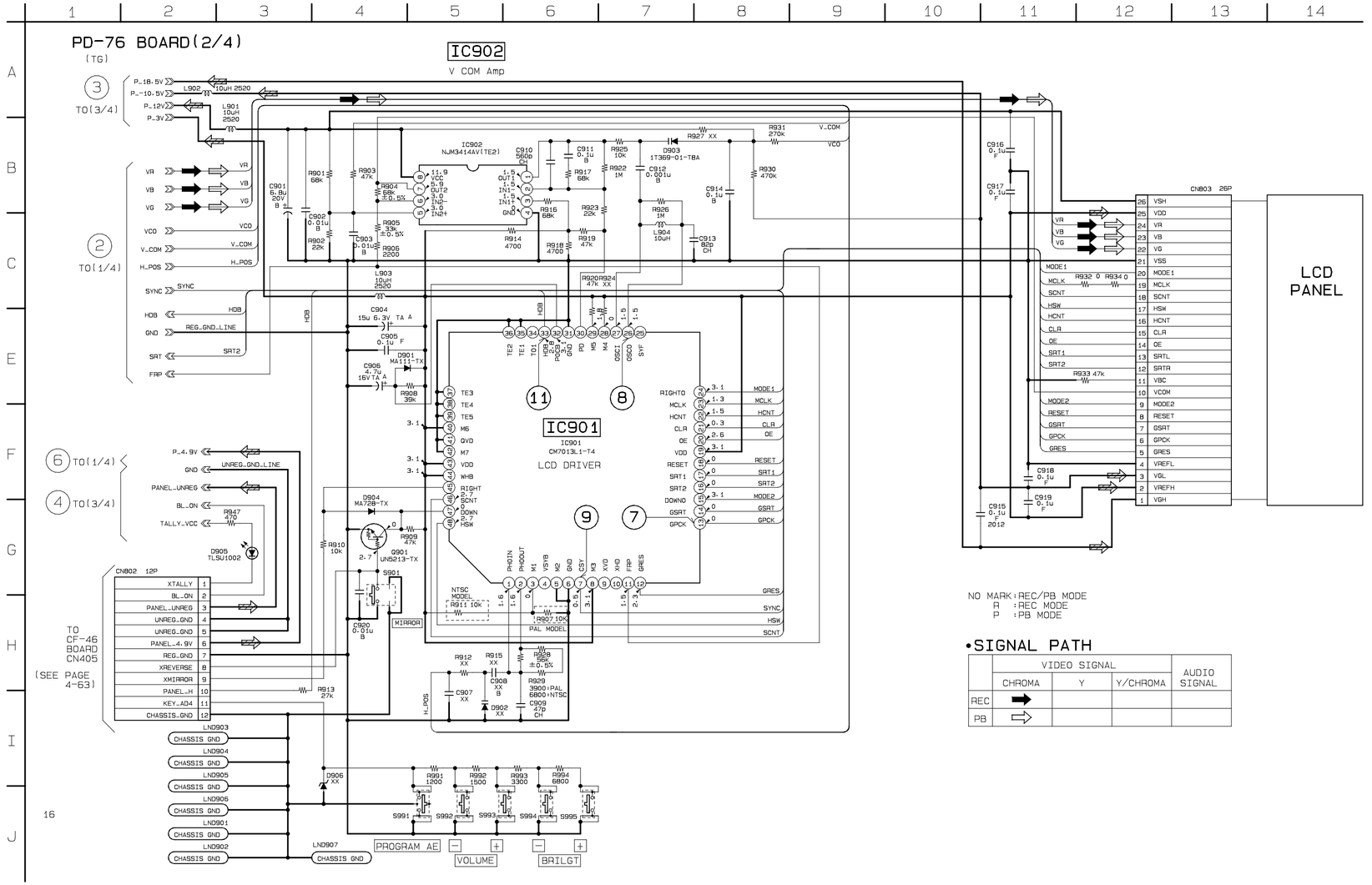

PD-76 (LCD) SCHEMATIC DIAGRAM
— Ref. No. PD-76 Board; 8,000 Series —

• See page 4-89 for PD-76 BOARD printed wiring board.

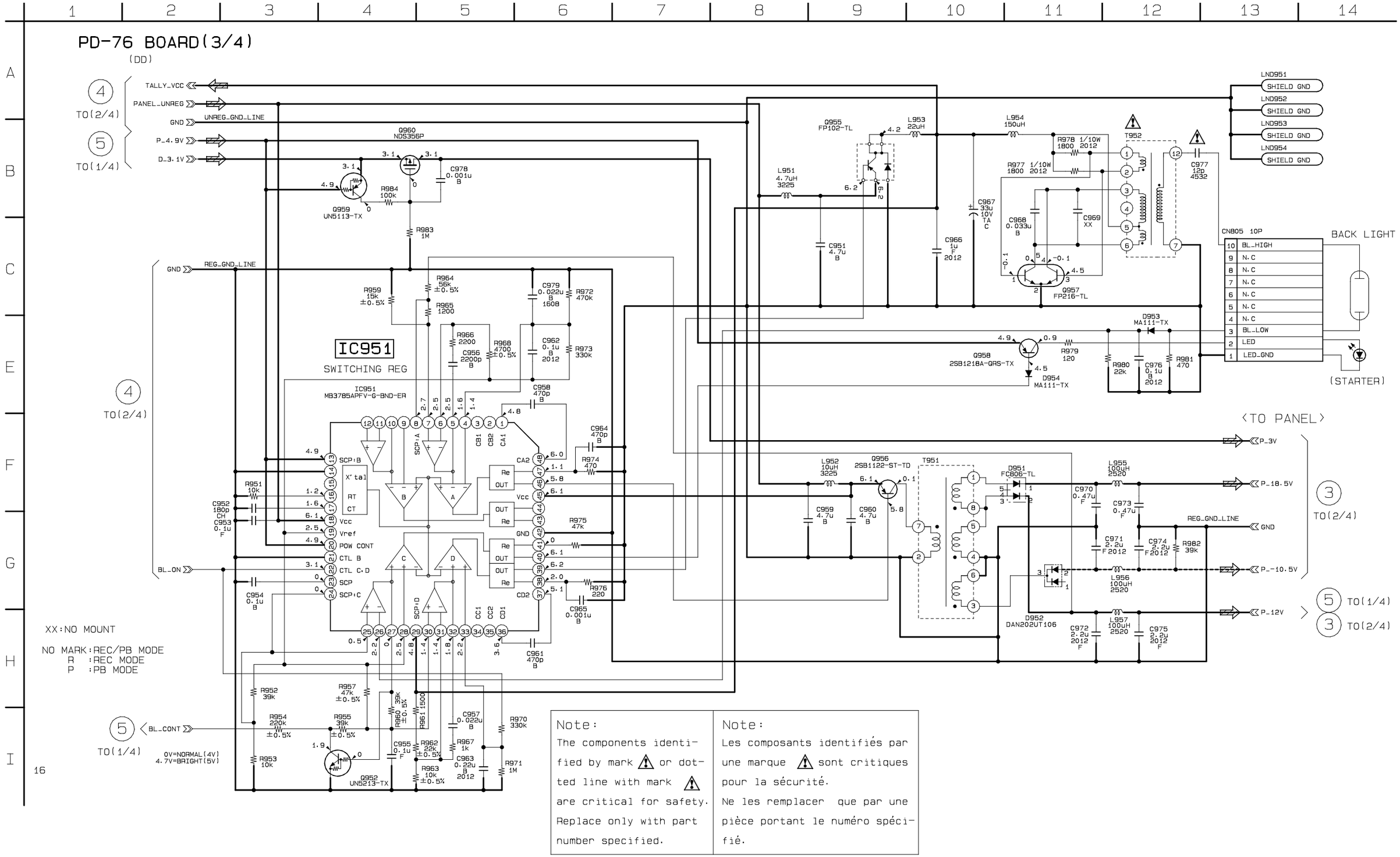

Note:	Note:
The components identified by mark ⚠ or dotted line with mark ⚠ are critical for safety. Replace only with part number specified.	Les composants identifiés par une marque ⚠ sont critiques pour la sécurité. Ne les remplacer que par une pièce portant le numéro spécifié.

PD-76 (LCD) SCHEMATIC DIAGRAM
— Ref. No. PD-76 Board; 8,000 Series —

• See page 4-89 for PD-76 BOARD printed wiring board.

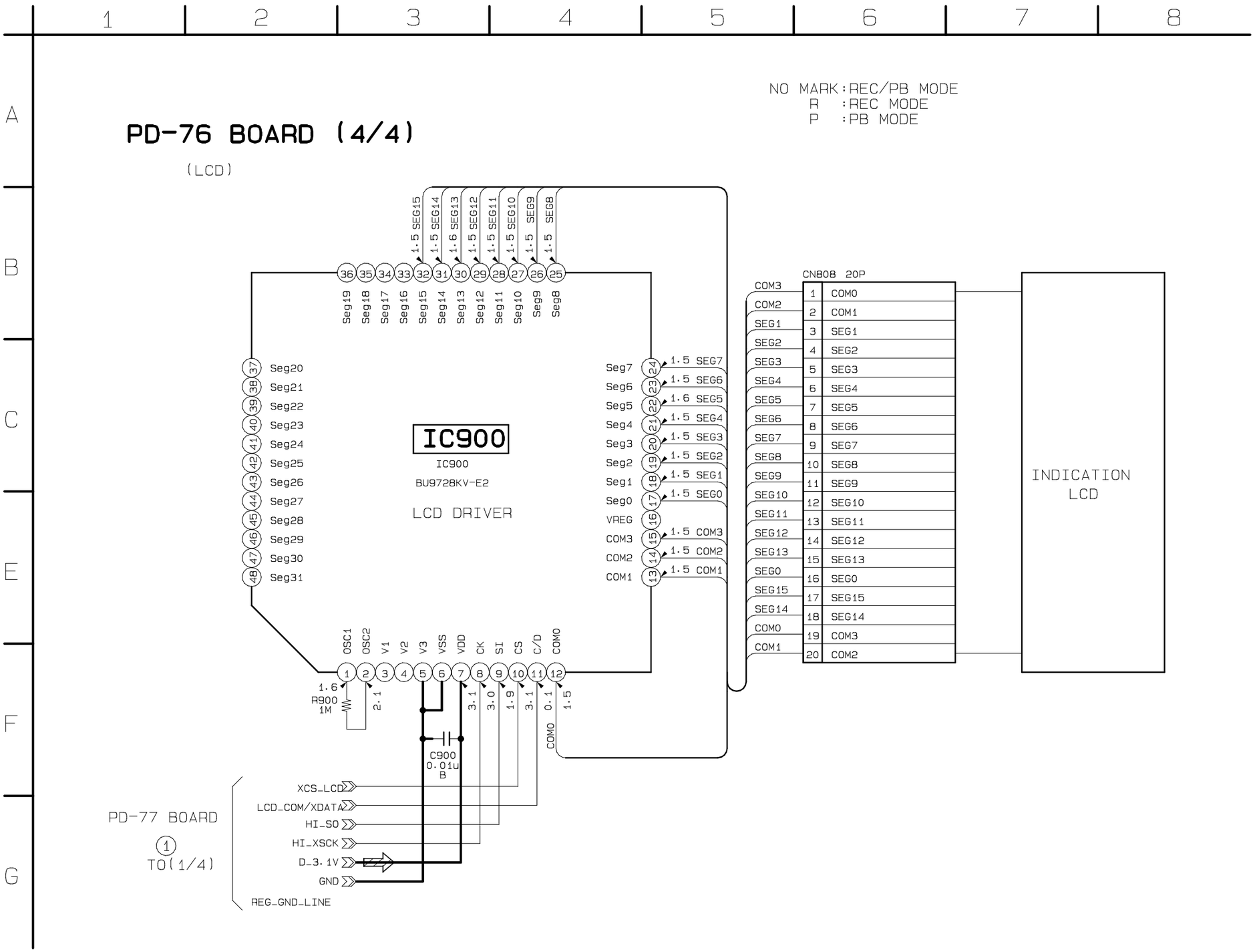

PD-77 (LCD) SCHEMATIC DIAGRAM
— Ref. No. PD-77 Board; 8,000 Series —

• See page 4-111 for PD-77 BOARD printed wiring board.

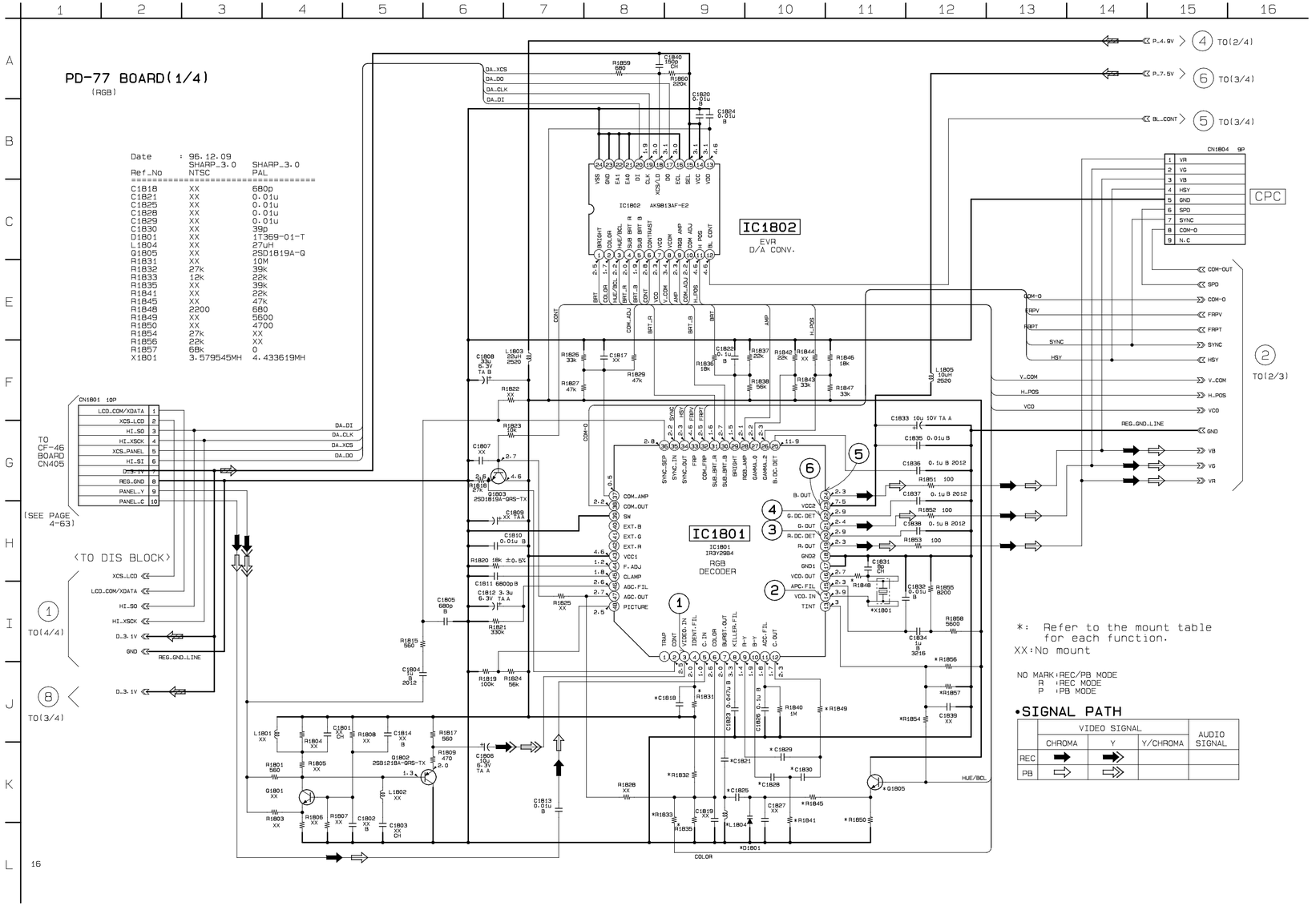

Ref_No	NTSC	PAL
C1818	XX	680p
C1821	XX	0.01u
C1825	XX	0.01u
C1828	XX	0.01u
C1829	XX	0.01u
C1830	XX	39p
D1801	XX	1T369-01-T
L1804	XX	27uH
Q1805	XX	2SD1819A-Q
R1831	XX	10M
R1832	27k	39k
R1833	12k	22k
R1835	XX	39k
R1841	XX	22k
R1845	XX	47k
R1848	2200	680
R1849	XX	5600
R1850	XX	4700
R1854	27k	XX
R1856	22k	XX
R1857	68k	0
X1801	3.579545MH	4.433619MH

•SIGNAL PATH

	VIDEO SIGNAL			AUDIO SIGNAL
	CHROMA	Y	Y/CHROMA	
REC	➡	➡		
PB	⇨	⇨		

PD-77 BOARD (1/4)

① IC1801 ③ REC/PB
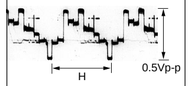

② IC1801 ⑭ REC/PB

③ IC1801 ⑳ REC/PB
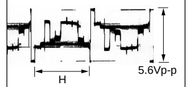

④ IC1801 ㉒ REC/PB
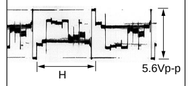

⑤ IC1801 ㉔ REC/PB
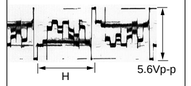

⑥ IC1801 ㉓ REC/PB
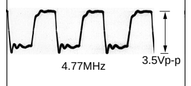

PD-77 (LCD) SCHEMATIC DIAGRAM
— Ref. No. PD-77 Board; 8,000 Series —

• See page 4-111 for PD-77 BOARD printed wiring board.

PD-77 BOARD (2/4)

⑦ IC1901 ⑬ REC/PB

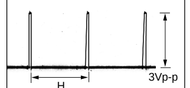

⑧ IC1901 ㉘ REC/PB

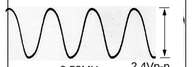

⑨ IC1901 ⑦ REC/PB

⑪ IC1901 ㉝ REC/PB

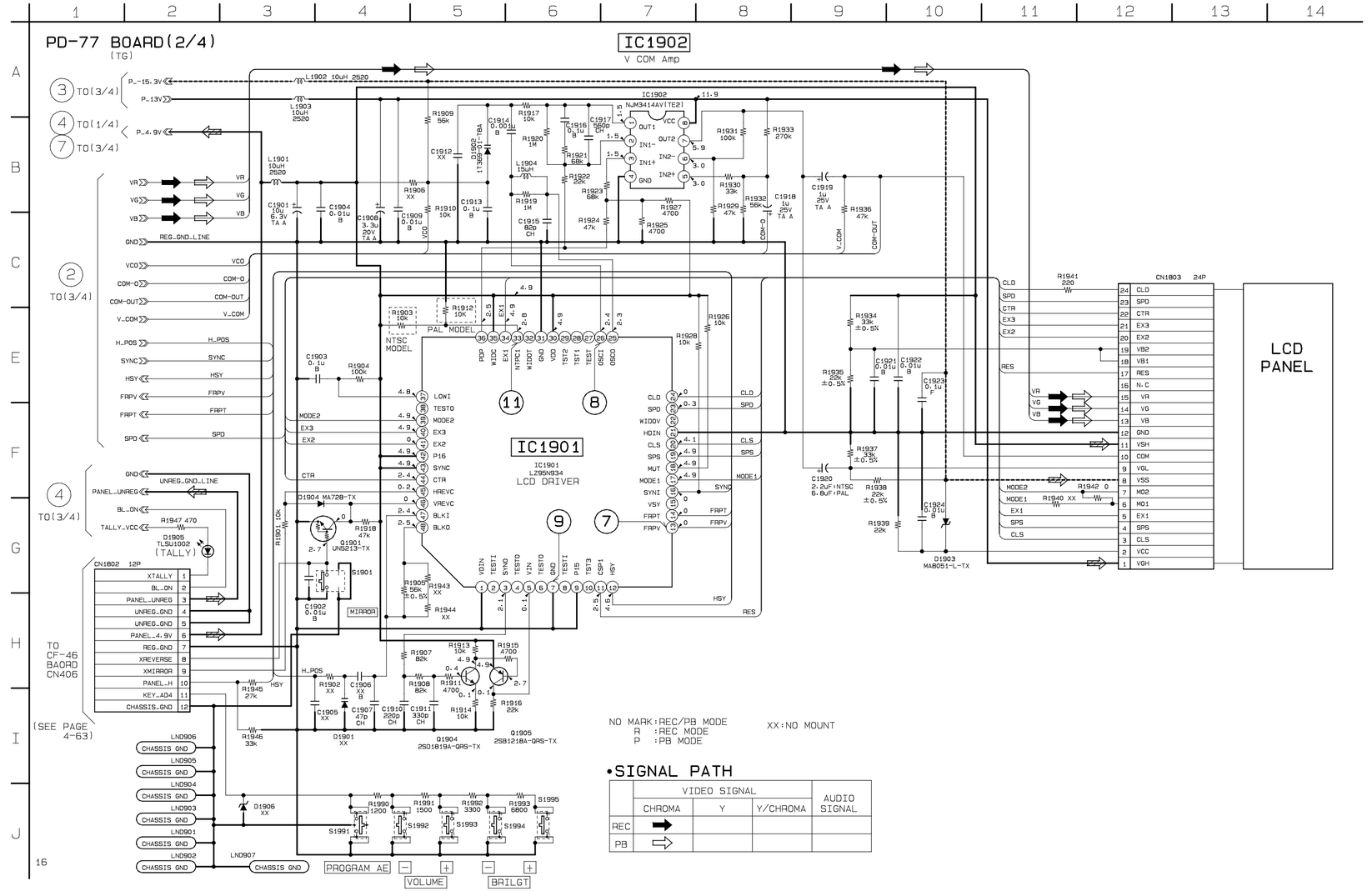

PD-77 (LCD) SCHEMATIC DIAGRAM
— Ref. No. PD-77 Board; 8,000 Series —

• See page 4-111 for PD-77 BOARD printed wiring board.

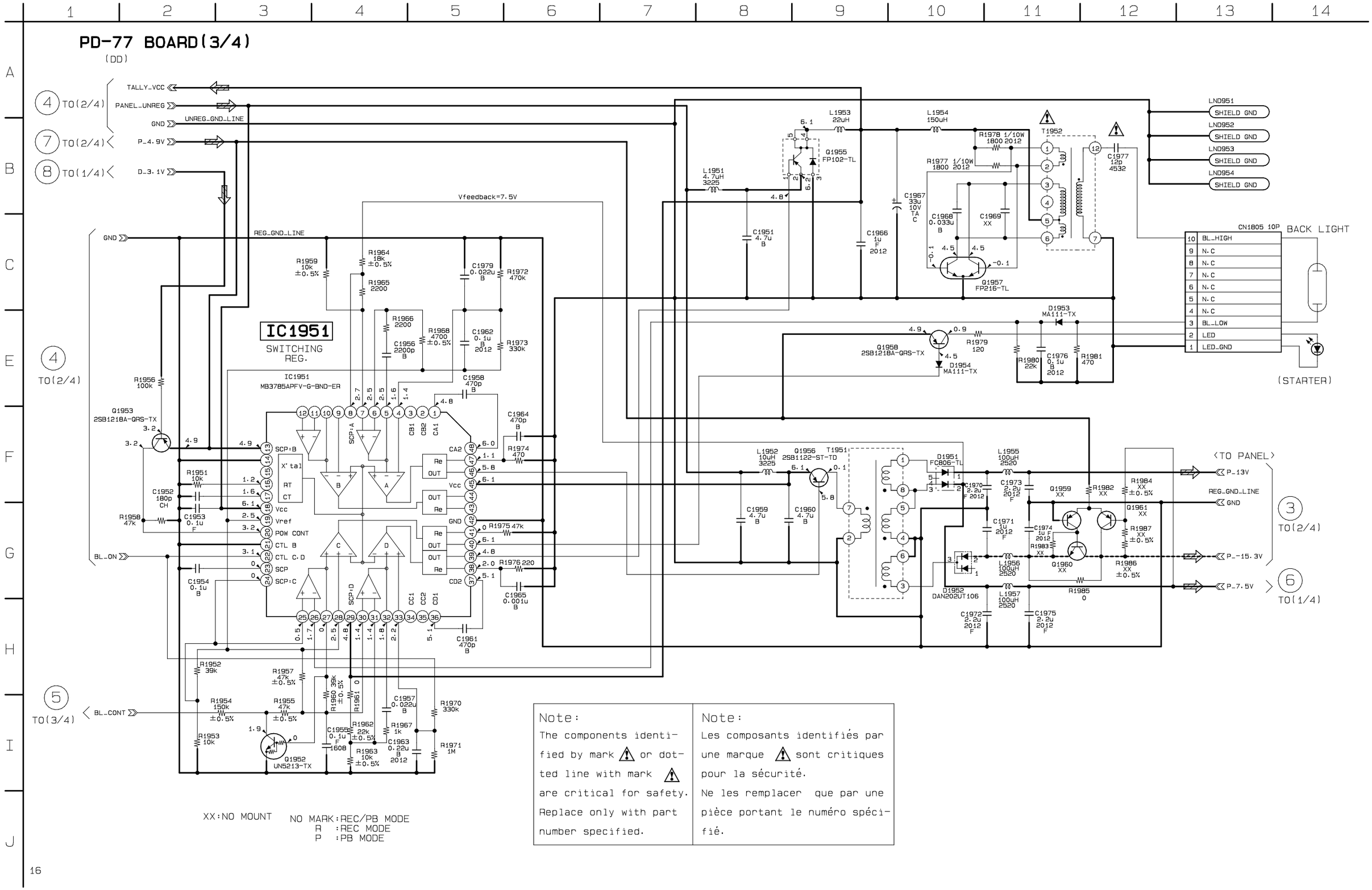

Note:	Note:
The components identified by mark ⚠ or dotted line with mark ⚠ are critical for safety. Replace only with part number specified.	Les composants identifiés par une marque ⚠ sont critiques pour la sécurité. Ne les remplacer que par une pièce portant le numéro spécifié.

PD-77 (LCD) SCHEMATIC DIAGRAM
— Ref. No. PD-77 Board; 8,000 Series —

• See page 4-111 for PD-77 BOARD printed wiring board.

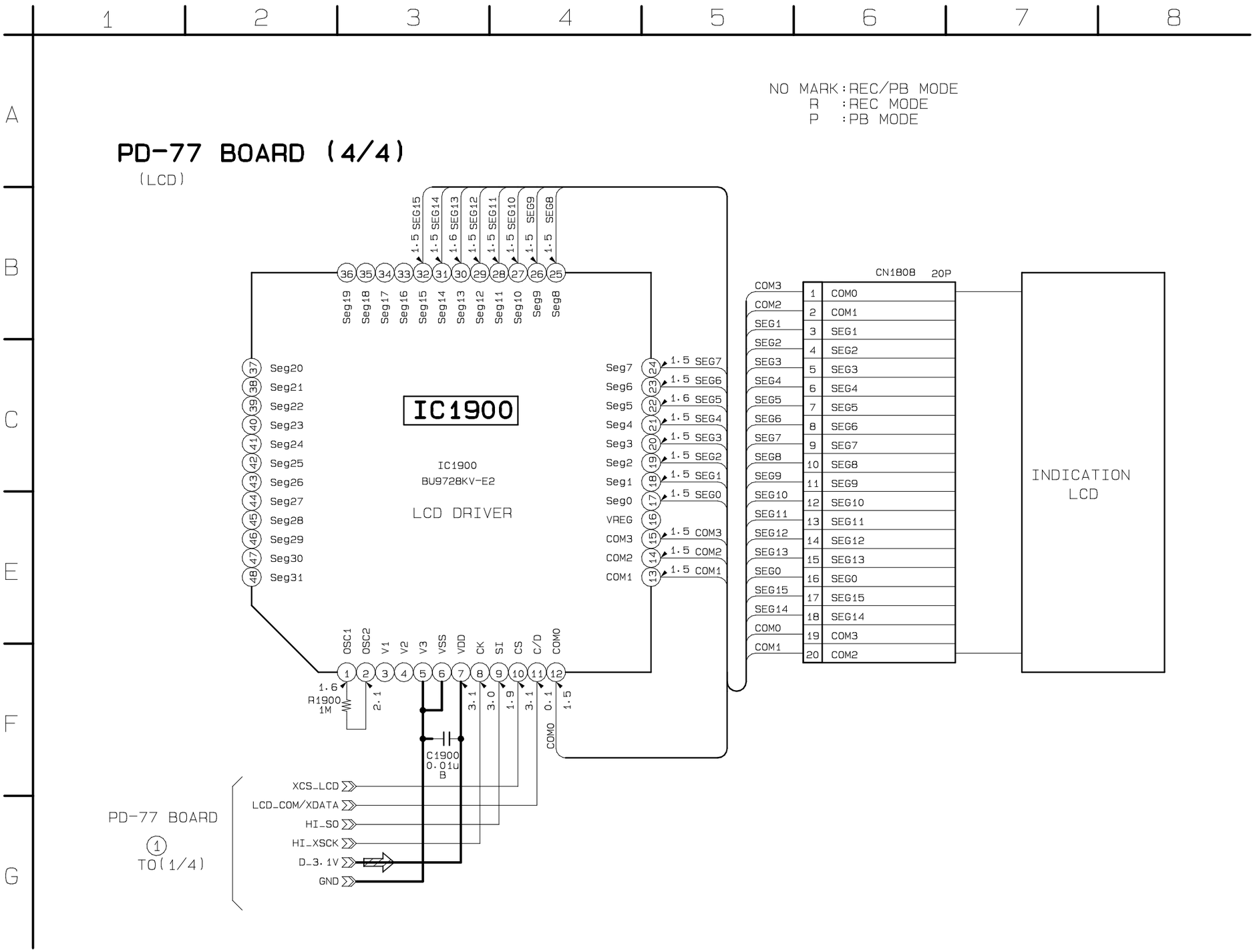

PD-74 (LCD DRIVER) SCHEMATIC DIAGRAM

— Ref. No. PD-74 Board; 8,000 Series —

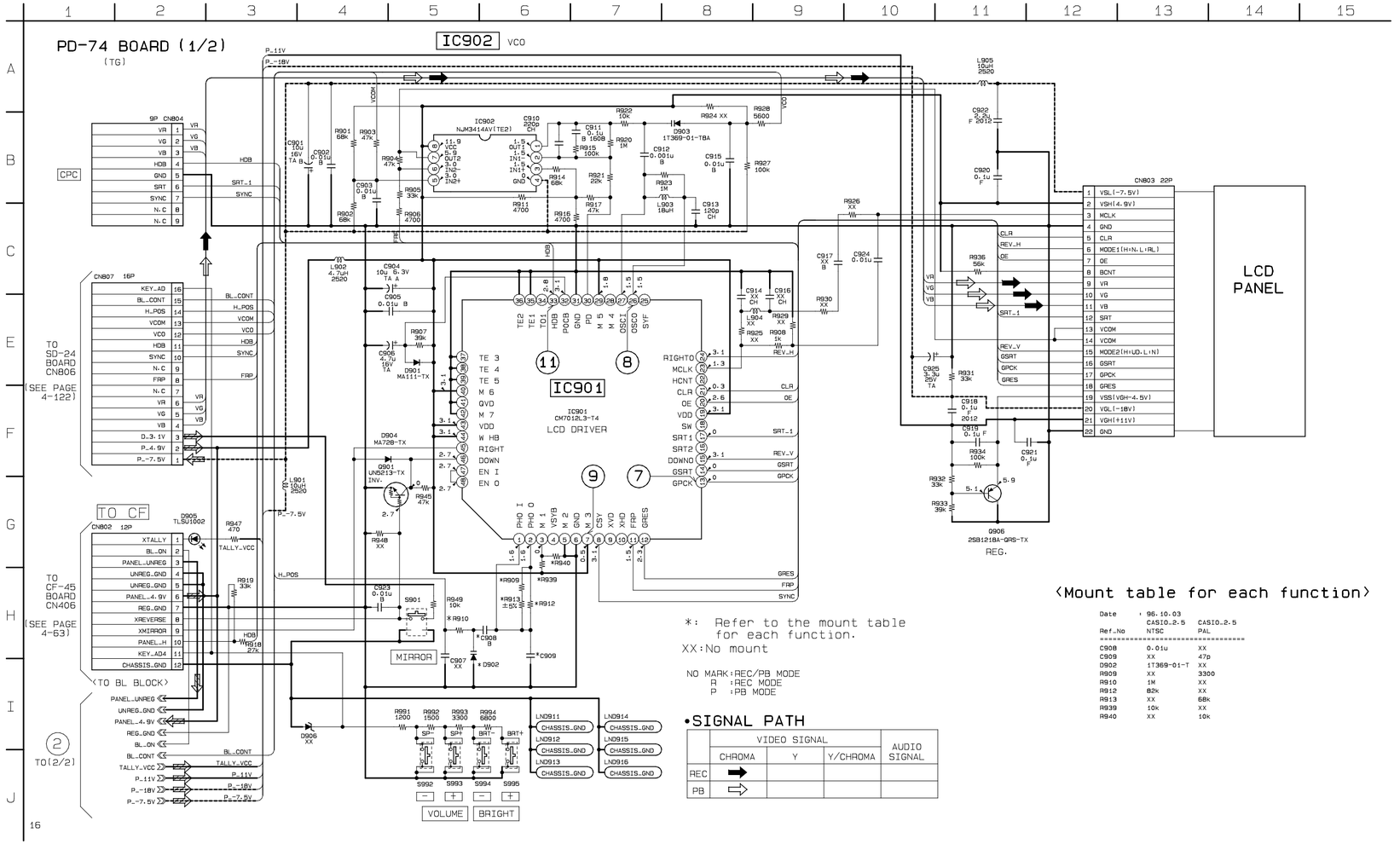

⟨Mount table for each function⟩

Date	: 96.10.03	
	CASIO-2.5	CASIO-2.5
Ref.No	NTSC	PAL
C908	0.01u	XX
C909	XX	47p
D902	1T369-01-T	XX
R909	XX	3300
R910	1M	XX
R912	82k	XX
R913	XX	68k
R939	10k	XX
R940	XX	10k

•SIGNAL PATH

	VIDEO SIGNAL			AUDIO SIGNAL
	CHROMA	Y	Y/CHROMA	
REC	➡			
PB	⇨			

PD-74 BOARD (1/2)

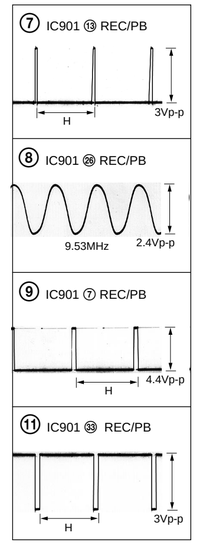

MF-7800 (FOCUS) SCHEMATIC DIAGRAM • Replaced are Blocks, so that there PRINTED WIRING BOARD are omitted.

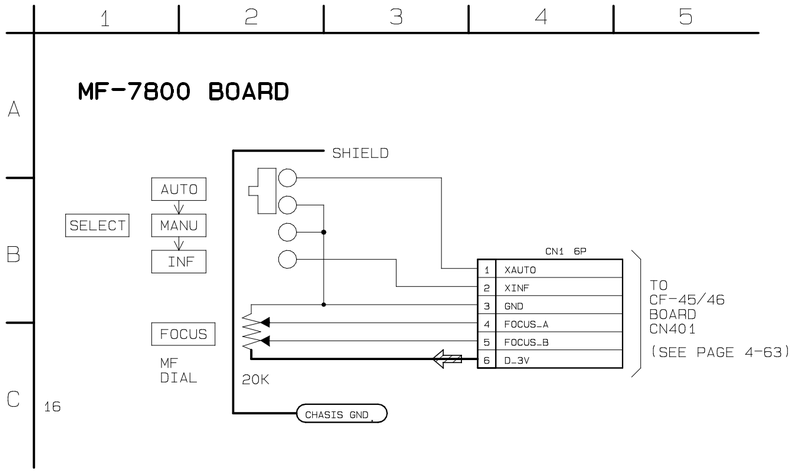

PD-74 (LCD DRIVER) SCHEMATIC DIAGRAM • See page 4-113 for PD-74 BOARD printed wiring board.
— Ref. No. PD-74 Board; 8,000 Series —

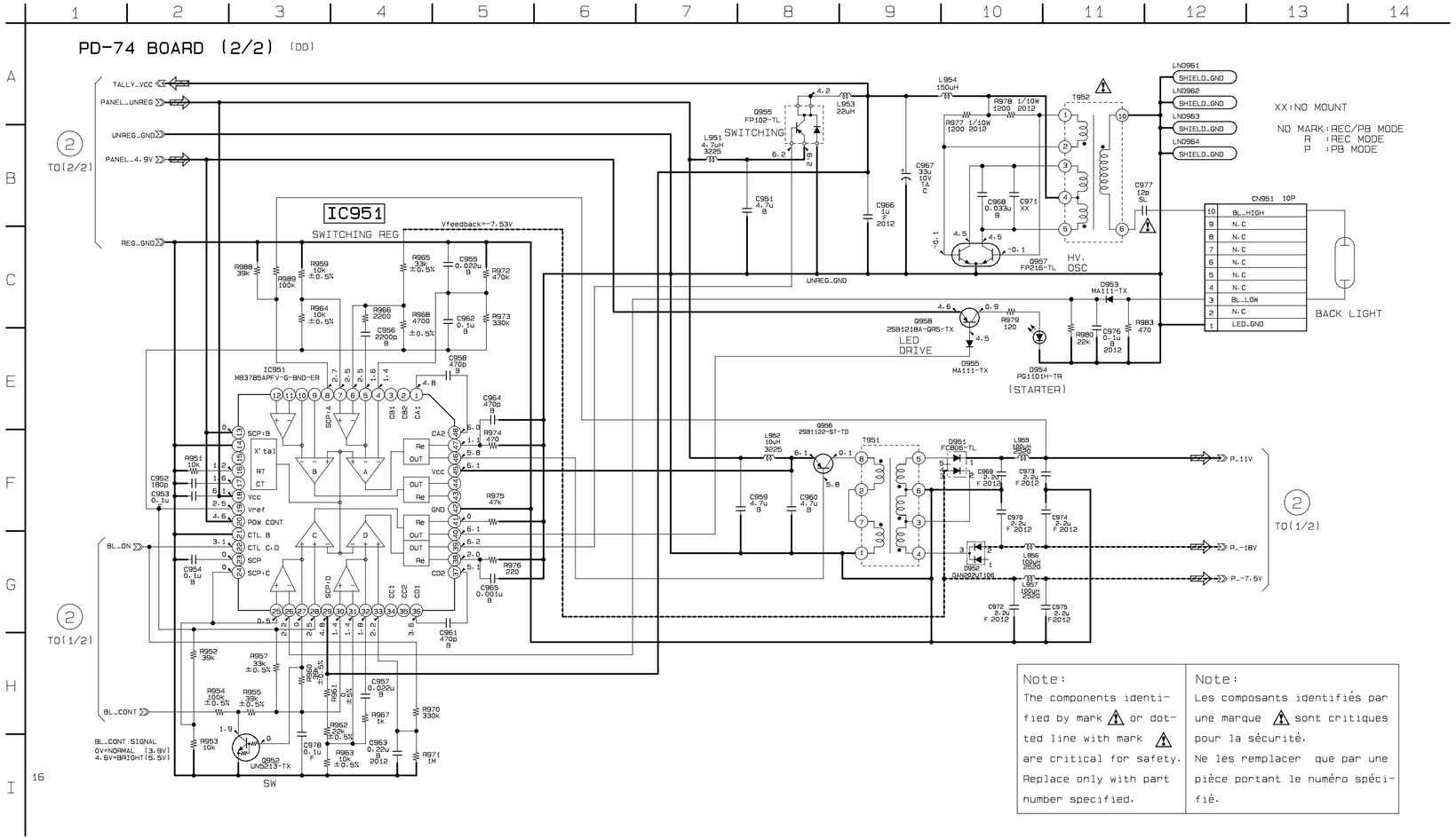

Note:	Note:
The components identified by mark ⚠ or dotted line with mark ⚠ are critical for safety. Replace only with part number specified.	Les composants identifiés par une marque ⚠ sont critiques pour la sécurité. Ne les remplacer que par une pièce portant le numéro spécifié.

SD-24 (RGB) SCHEMATIC DIAGRAM
— Ref. No. SD-24 Board; 8,000 Series —

• See page 4-127 for SD-24 BOARD printed wiring board.

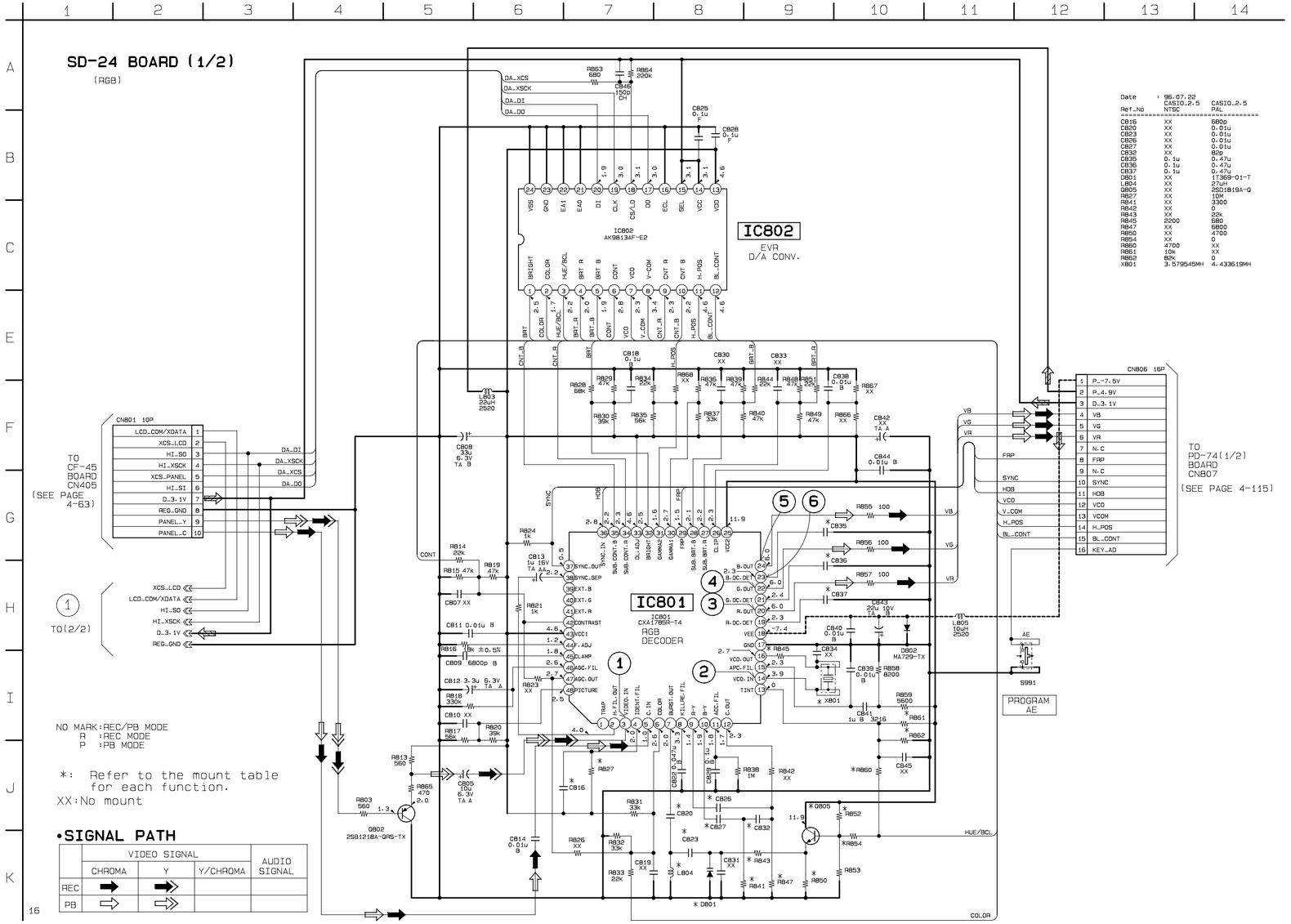

Date	96.07.22	
Ref.No	CASIO.2.5 NTSC	CASIO.2.5 PAL
CB16	XX	680p
CB20	XX	0.01u
CB23	XX	0.01u
CB26	XX	0.01u
CB27	XX	0.01u
CB32	XX	82p
CB35	0.1u	0.47u
CB36	0.1u	0.47u
CB37	0.1u	0.47u
DB01	XX	1T369-01-T
LB04	XX	27uH
QB05	XX	2SD1819A-Q
RB27	XX	10K
RB41	XX	330Ω
RB42	XX	0
RB43	XX	22k
RB45	2200	680
RB47	XX	6800
RB50	XX	4700
RB54	XX	0
RB60	4700	XX
RB61	10k	XX
RB62	82k	0
XB01	3.579545MH	4.433619MH

SD-24 BOARD (1/2)

① IC801 ③ REC/PB
H 0.5Vp-p

② IC801 ⑭ REC/PB
4.43MHz (PAL) 560mVp-p
3.58MHz (NTSC)

③ IC801 ⑳ REC/PB
H 5.6Vp-p

④ IC801 ㉒ REC/PB
H 5.6Vp-p

⑤ IC801 ㉔ REC/PB
H 5.6Vp-p

⑥ IC801 ㉓ REC/PB
4.77MHz 3.5Vp-p

SD-24 (RGB) SCHEMATIC DIAGRAM
— Ref. No. SD-24 Board; 8,000 Series —

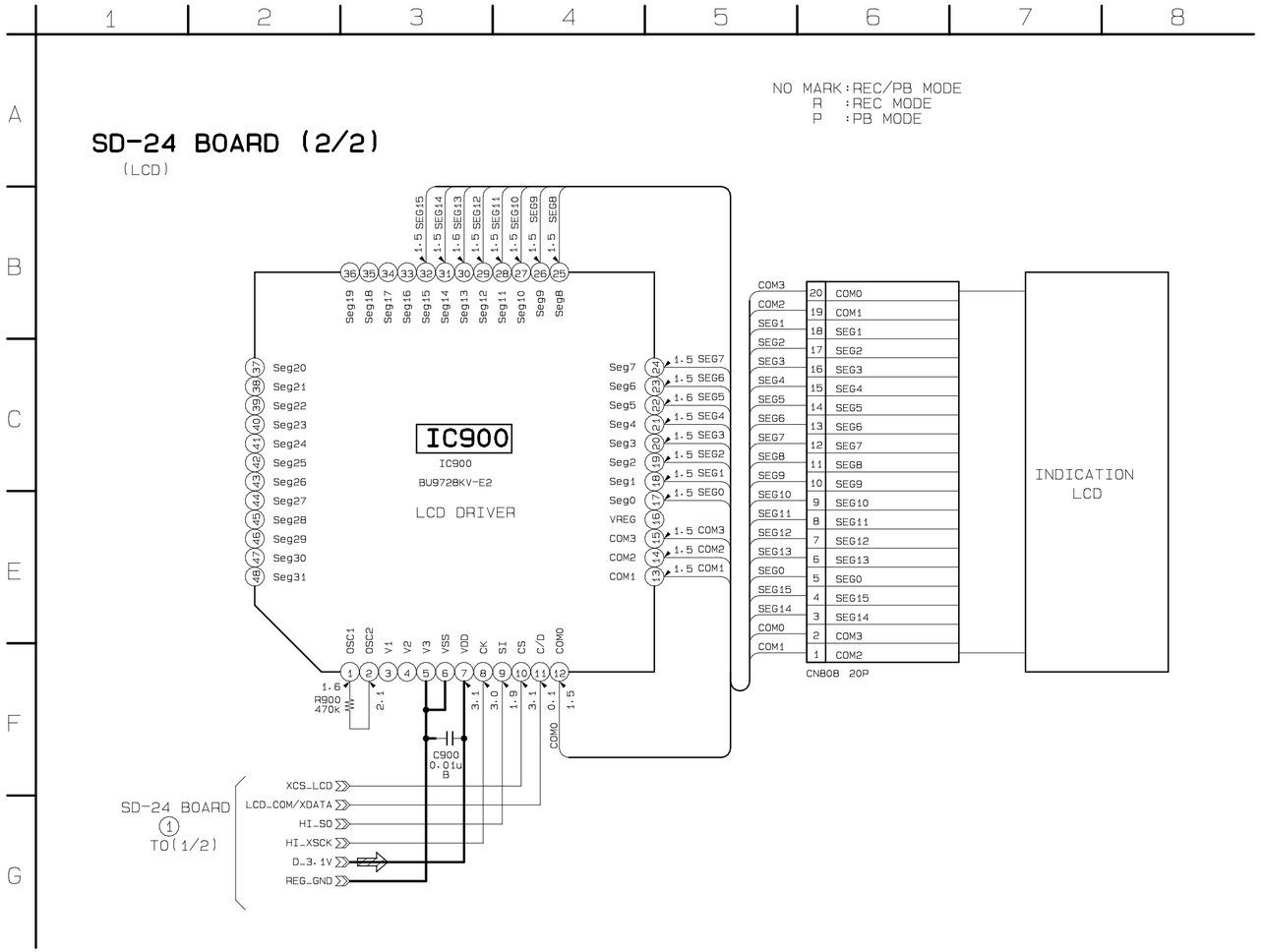

PD-75 (LCD DRIVER) SCHEMATIC DIAGRAM

— Ref. No. PD-75 Board; 8,000 Series —

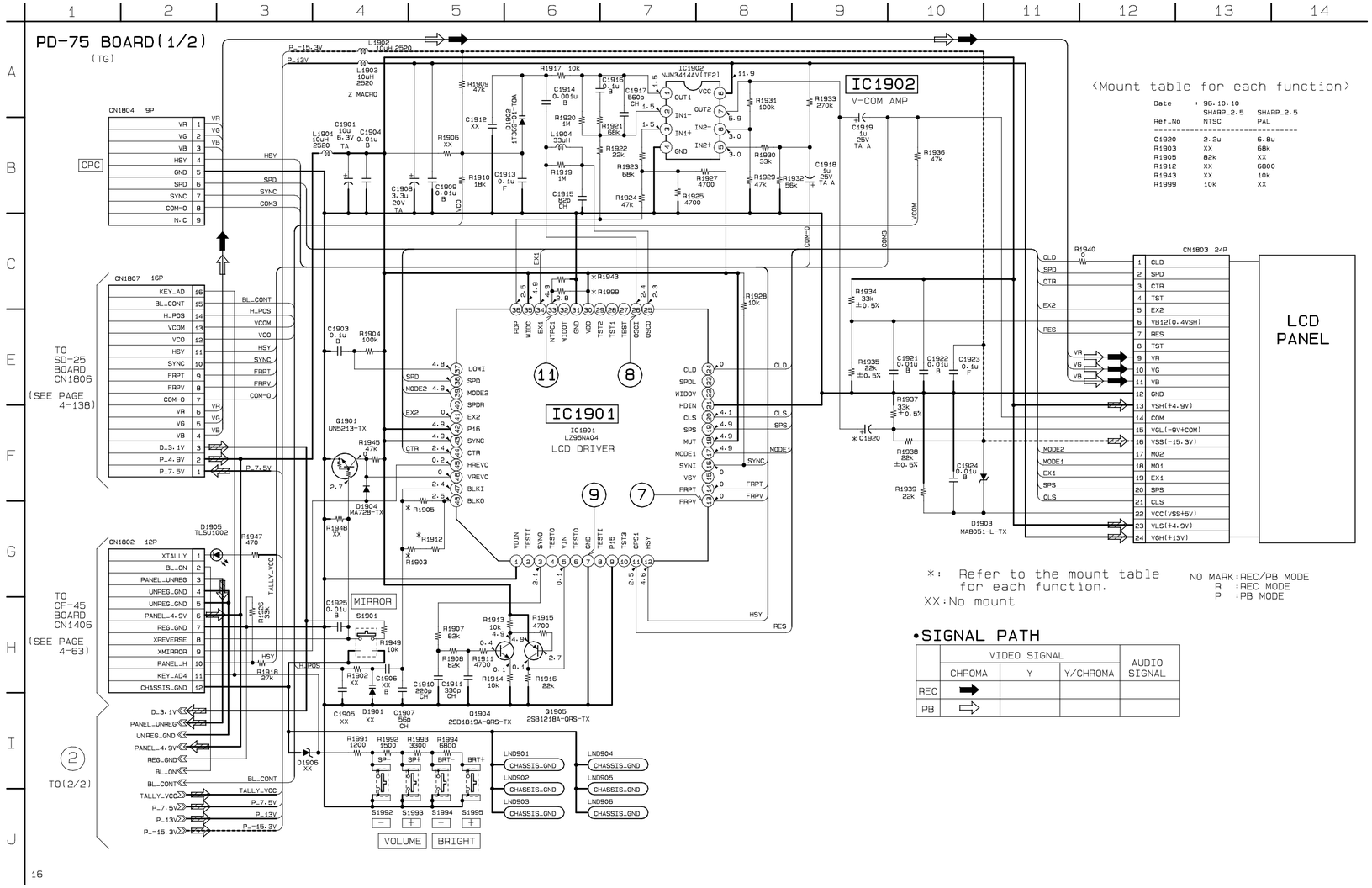

〈Mount table for each function〉

Date	96.10.10		
	SHARP_2.5	SHARP_2.5	
Ref_No	NTSC	PAL	
C1920	2.2u	6.8u	
R1903	XX	68k	
R1905	82k	XX	
R1912	XX	6800	
R1943	XX	10k	
R1999	10k	XX	

PD-75 BOARD (1/2)

⑦ IC1901 ⑬ REC/PB

⑧ IC1901 ㉘ REC/PB

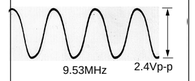

⑨ IC1901 ⑦ REC/PB

⑪ IC1901 ㉝ REC/PB

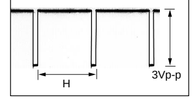

PD-75 (LCD DRIVER) SCHEMATIC DIAGRAM

— Ref. No. PD-75 Board; 8,000 Series —

• See page 4-129 for PD-75 BOARD printed wiring board.

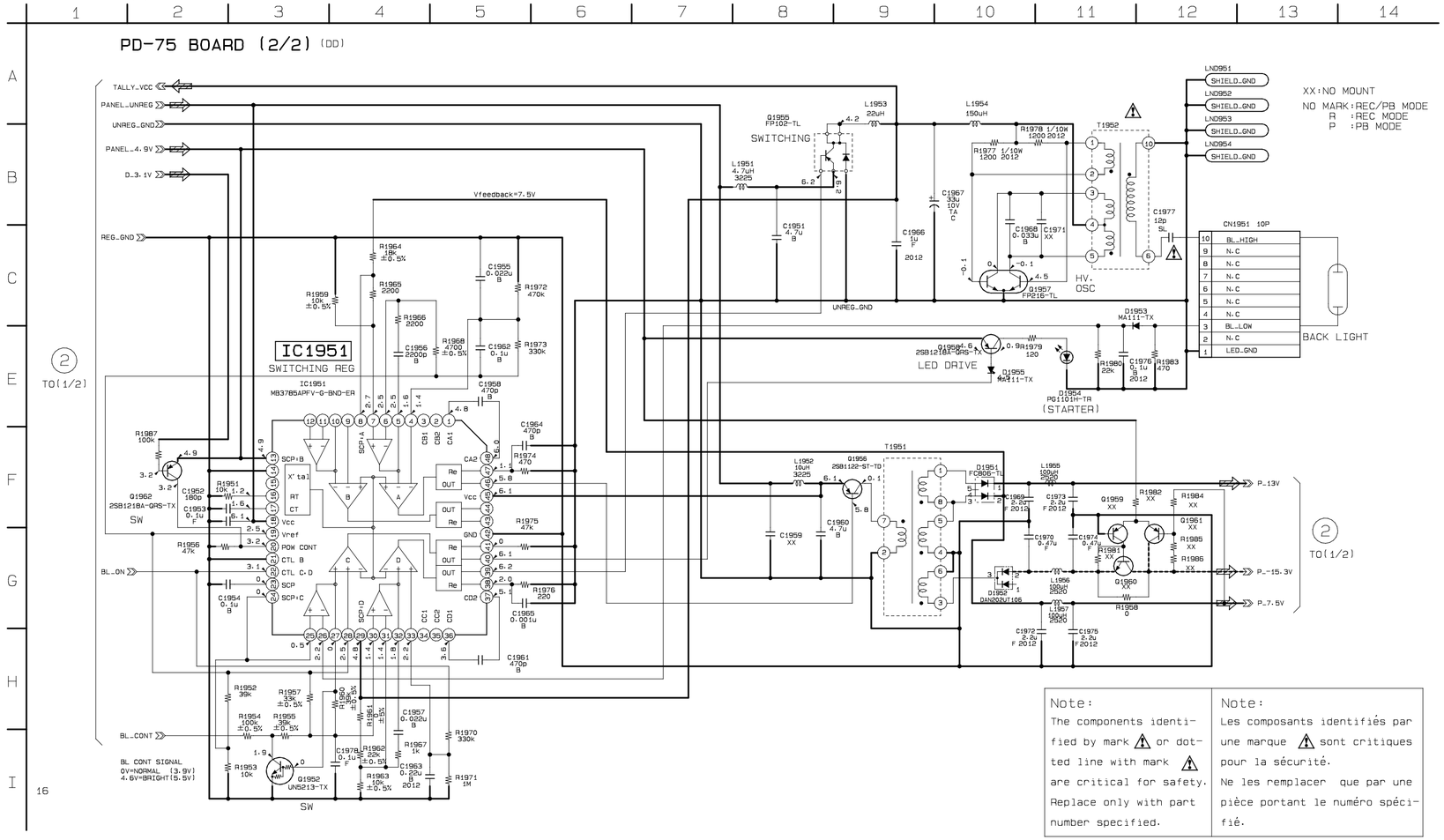

SD-25 (RGB) SCHEMATIC DIAGRAM
— Ref. No. SD-25 Board; 8,000 Series —

• See page 4-143 for SD-25 BOARD printed wiring board.

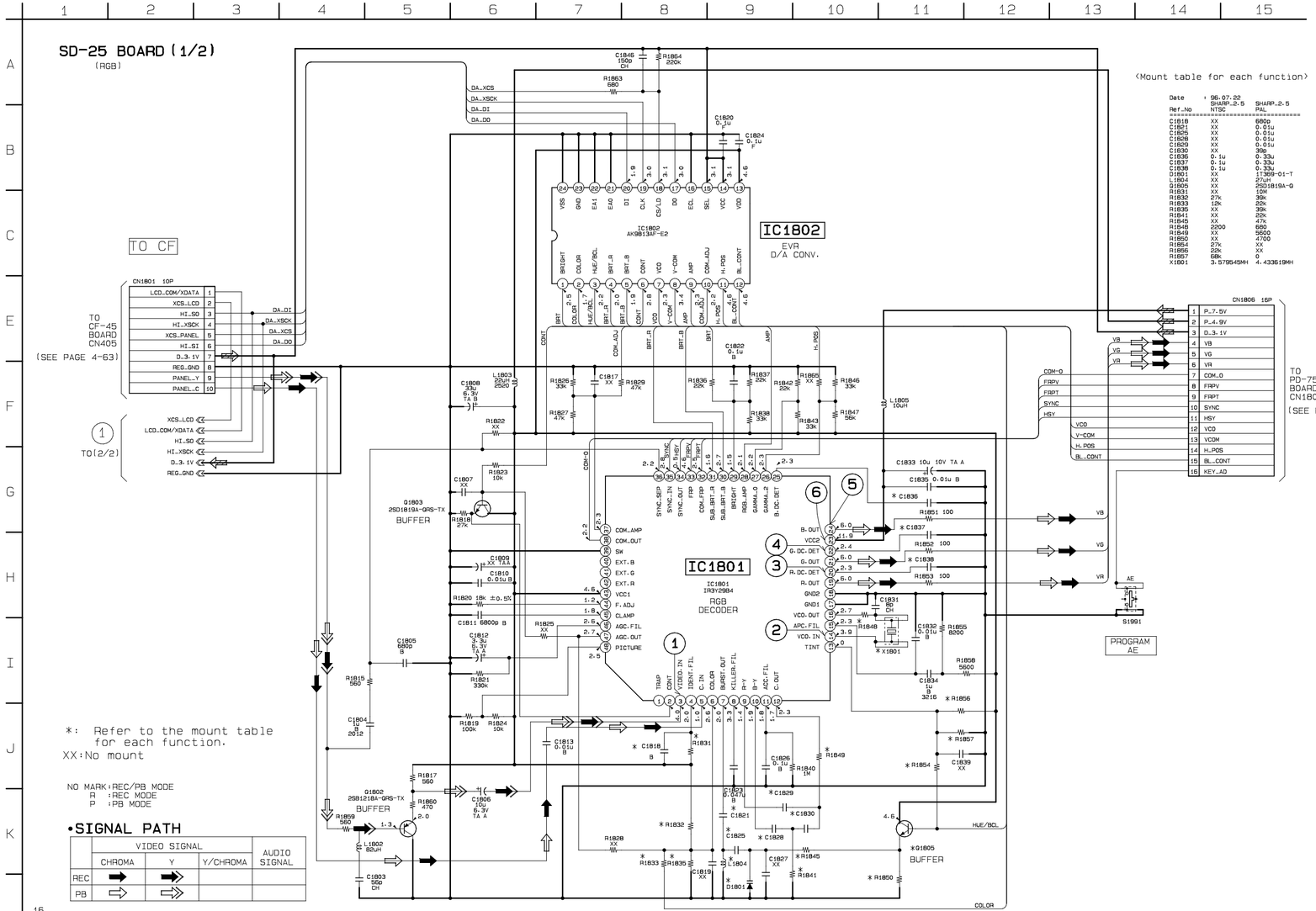

SD-25 BOARD (1/2)

① IC1801 ③ REC/PB

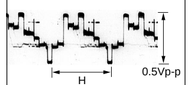

② IC1801 ⑭ REC/PB

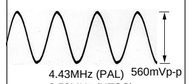

③ IC1801 ⑳ REC/PB

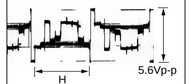

④ IC1801 ㉒ REC/PB

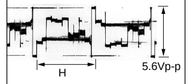

⑤ IC1801 ㉔ REC/PB

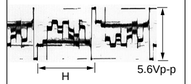

⑥ IC1801 ㉓ REC/PB

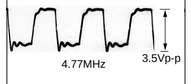

SD-25 (RGB) SCHEMATIC DIAGRAM
— Ref. No. SD-25 Board; 8,000 Series —

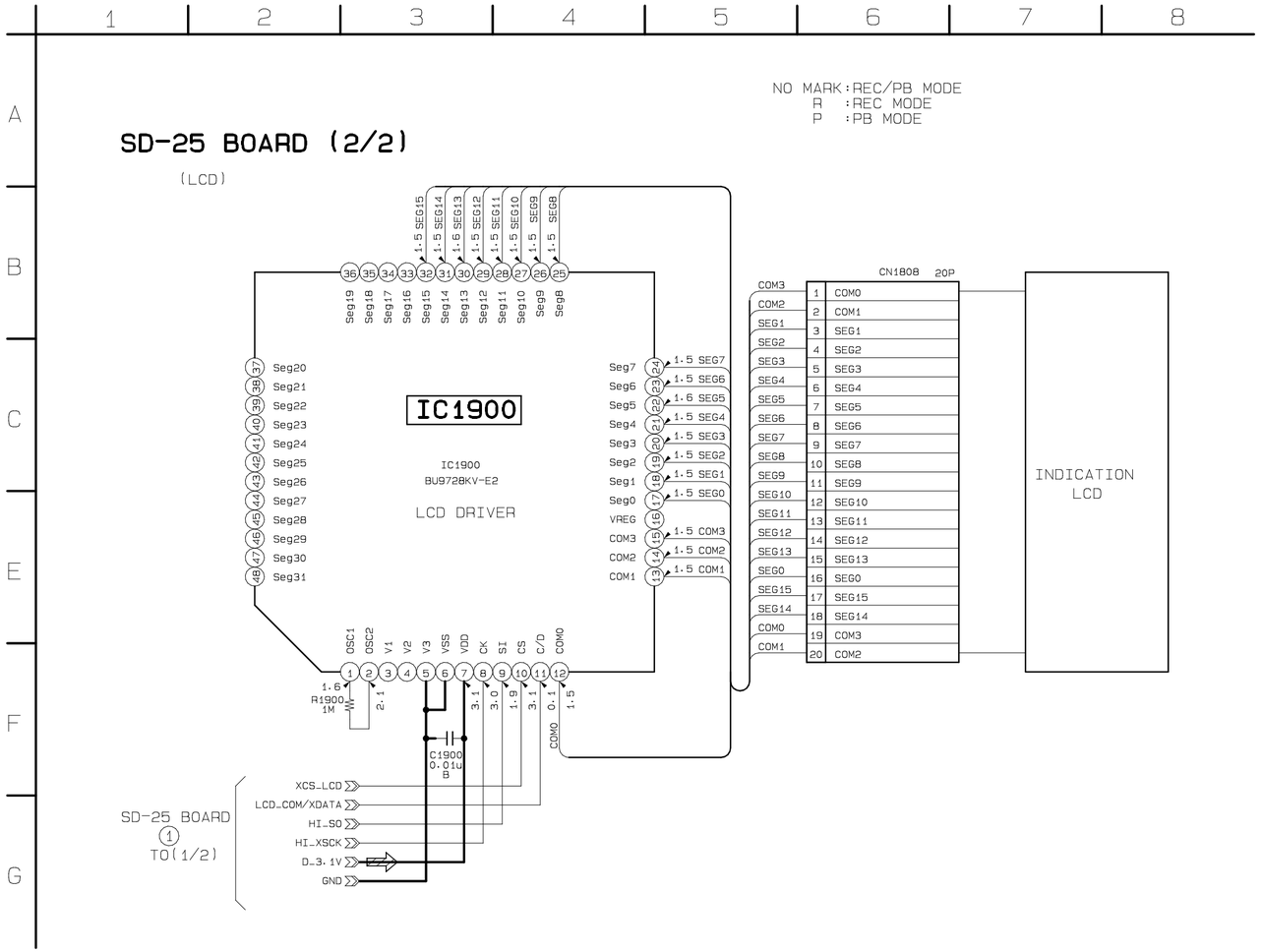

SECTION 5
REPAIR PARTS LIST

5-1. EXPLODED VIEWS

NOTE:

- -XX, -X mean standardized parts, so they may have some differences from the original one.
- Items marked "*" are not stocked since they are seldom required for routine service. Some delay should be anticipated when ordering these items.
- The mechanical parts with no reference number in the exploded views are not supplied.

The components identified by mark ⚠ or dotted line with mark ⚠ are critical for safety. Replace only with part number specified.

Les composants identifiés par une marque ⚠ sont critiques pour la sécurité.
Ne les remplacer que par une pièce portant le numéro spécifie.

5-1-1. OVERALL SECTION

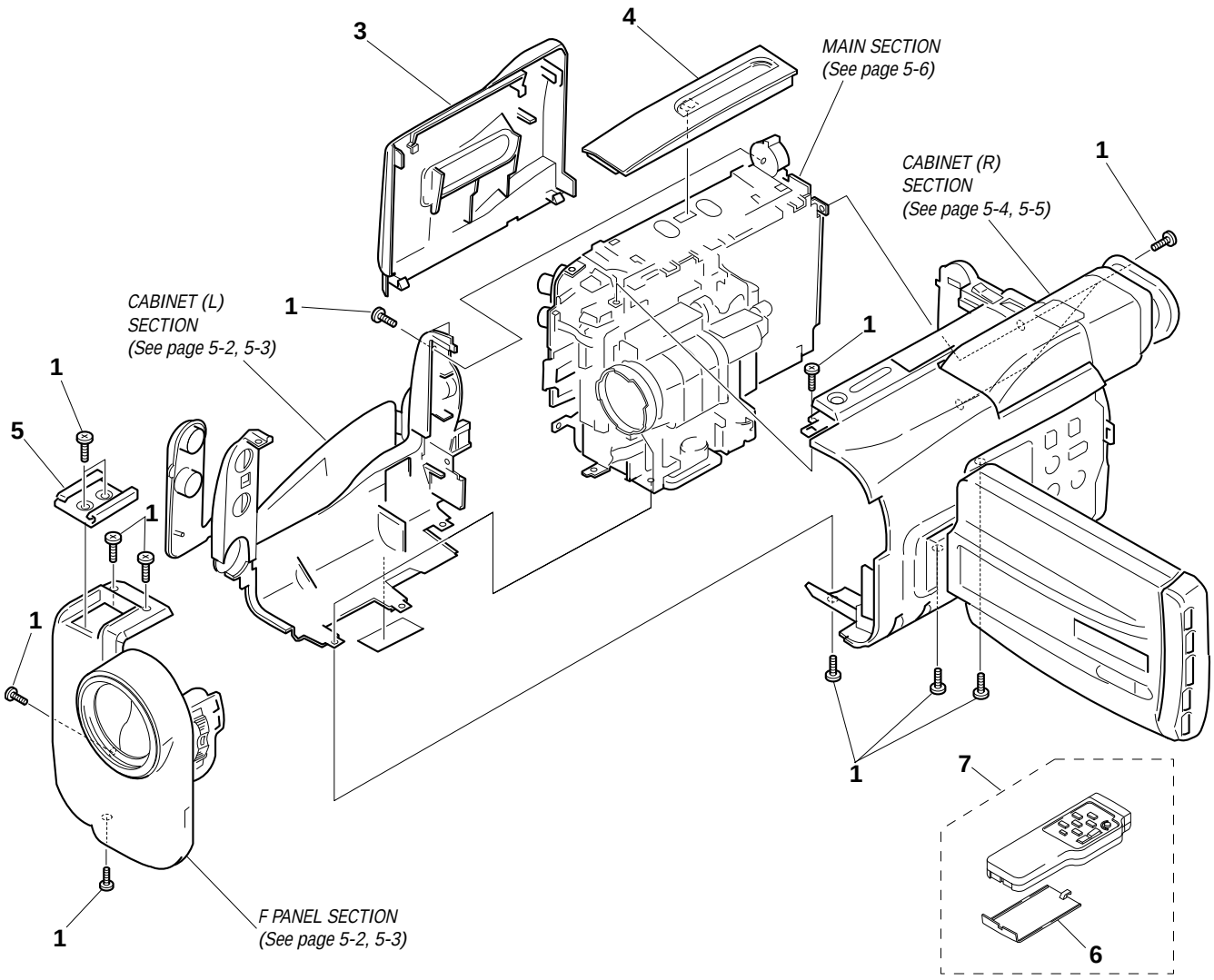

Ref. No.	Part No.	Description	Remarks
1	3-962-826-01	SCREW (2X4)	
3	X-3945-446-1	LID ASSY, CASSETTE (TRV312/TRV512)	
3	X-3947-229-1	LID ASSY (G), CASSETTE (EXCEPT TRV312/TRV512)	
4	3-975-365-01	LID, LS (EXCEPT TRV312/TRV512)	
4	3-975-365-11	LID, LS (TRV312/TRV512)	
5	3-975-363-01	SHOE, ACCESSORY	
6	3-958-131-01	COVER,BATTERY REMOCON	
7	1-473-342-11	REMOTE COMMANDER (RMT-713)	

5-1-2 (1). CABINET (L), F PANEL SECTION (EXCEPT TRV14E/TRV24E MODEL)

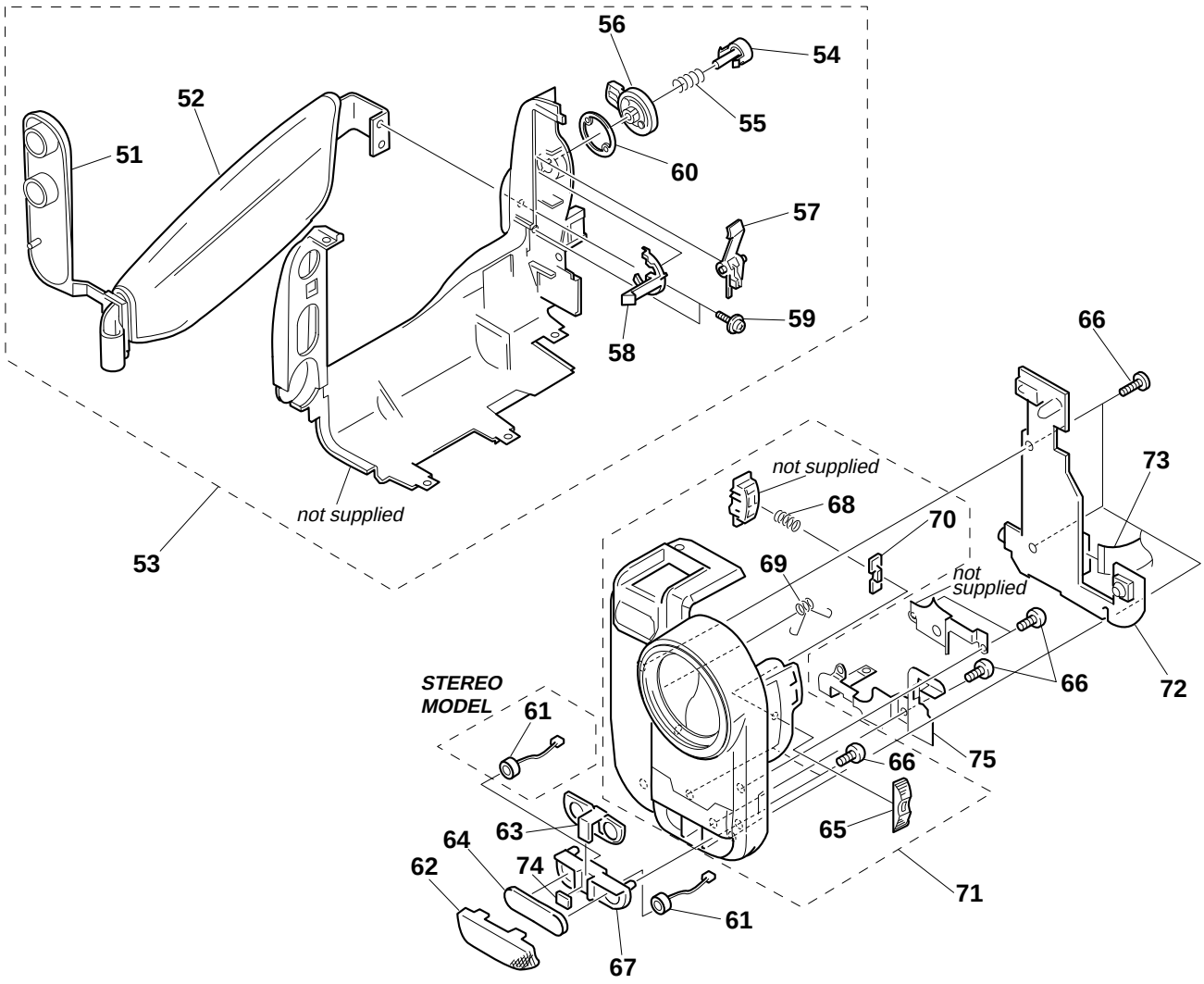

Ref. No.	Part No.	Description	Remarks
51	3-965-888-01	COVER, JACK (BLACK)(TRV312)	
51	3-965-888-21	COVER, JACK (GRAY)(EXCEPT TRV312)	
52	3-969-339-31	BELT, GRIP	
53	X-3947-072-1	CABINET (L) ASSY (TRV312)	
53	X-3947-230-1	CABINET (L) ASSY (TRV32/TRV53)	
53	X-3947-256-1	CABINET (L) ASSY (TRV34/TRV44/TRV52/TRV44E)	
53	X-3947-420-1	CABINET (L) ASSY (TRV512)	
54	3-965-844-01	BUTTON, S/S	
55	3-965-830-01	SPRING, COMPRESSION	
56	3-942-985-01	KNOB, STAND-BY	
57	3-965-870-01	PLATE, S/S JOINT	
58	3-965-869-01	HOLDER, KNOB	
59	3-730-107-01	SCREW (M2X2.2)	
60	3-736-364-01	SPRING	
61	1-542-312-11	BOOK, MICRO	
62	3-976-104-01	GRILLE, MIC	
63	3-976-101-01	HOUSING, MICROPHONE	
64	3-976-103-02	SCREEN, WINDOW	
65	3-975-476-01	KNOB (832), POWER	

Ref. No.	Part No.	Description	Remarks
66	3-719-601-01	SCREW (B2X5),TAPPING	
67	3-976-102-01	RETAINER, MICROPHONE	
68	3-973-619-01	SPRING, COMPRESSION	
69	3-976-621-01	SPRING, TORSION	
70	3-975-478-01	LOCK, POWER	
71	X-3947-324-1	PANEL ASSY, F (TRV32)	
71	X-3947-334-1	PANEL ASSY, F (TRV34/TRV44/TRV44E)	
71	X-3947-336-1	PANEL ASSY, F(TRV53)	
71	X-3947-422-1	PANEL ASSY, F (TRV52)	
71	X-3947-423-1	PANEL ASSY, F (TRV512)	
71	X-3947-466-1	PANEL ASSY, F (TRV312)	
72	A-7073-138-A	MA-297 BOARD, COMPLETE (TRV32/TRV312)	
72	A-7073-165-A	MA-297 BOARD, COMPLETE (TRV34/TRV44/TRV44E)	
72	A-7073-190-A	MA-297 BOARD, COMPLETE (TRV53)	
72	A-7073-192-A	MA-297 BOARD, COMPLETE (TRV52/TRV512)	
73	1-782-154-11	CABLE, FLEXIBLE FLAT 12P	
74	3-977-764-01	SHEET, STEREO (TRV34/TRV44/TRV52/TRV512/TRV44E)	
* 75	3-976-068-01	PLATE, MA GROUND	

5-1-2 (2). CABINET (L), F PANEL SECTION (TRV14E/TRV24E MODEL)

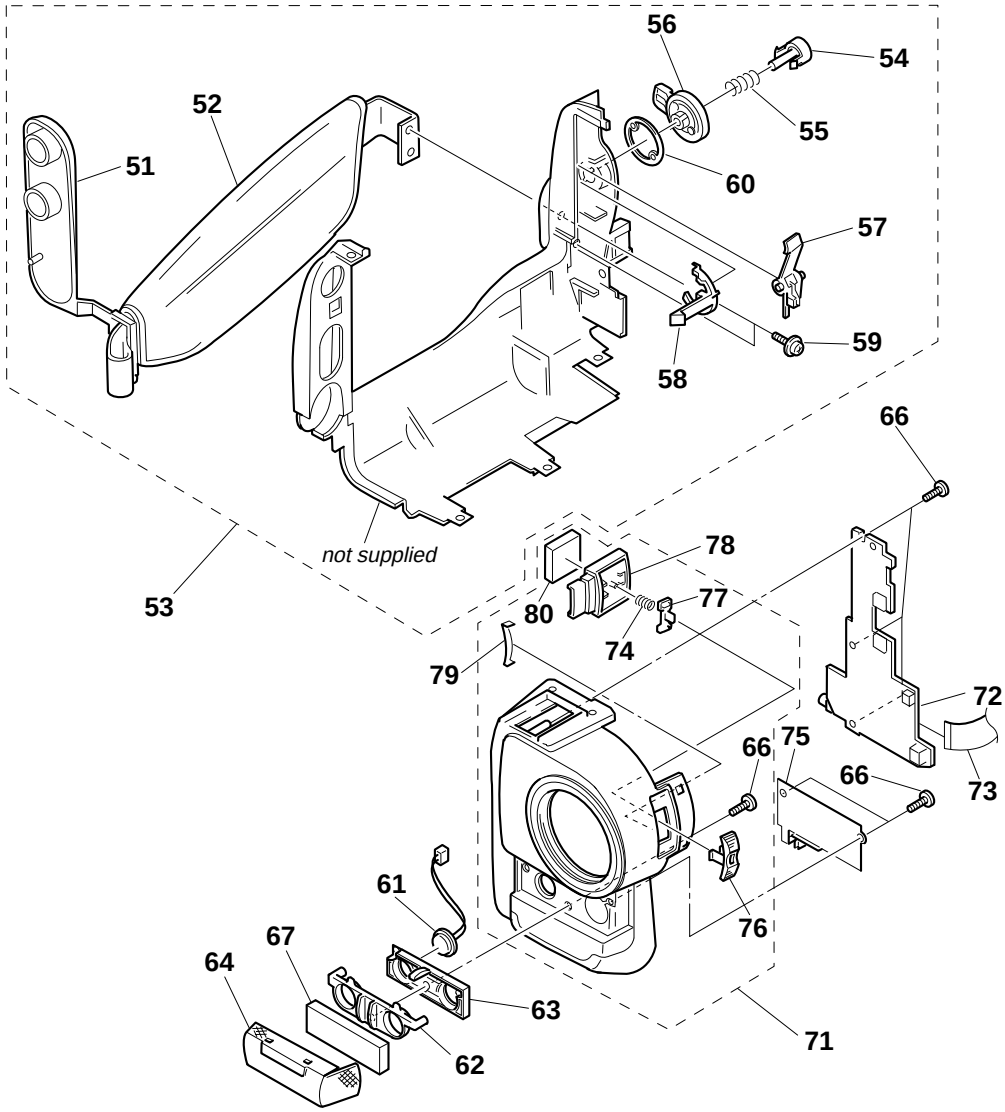

Ref. No.	Part No.	Description	Remarks
51	3-965-888-21	COVER, JACK	
52	3-969-339-31	BELT, GRIP	
53	X-3947-230-1	CABINET (L) ASSY (G)	
54	3-965-844-01	BUTTON, S/S	
55	3-965-830-01	SPRING, COMPRESSION	
56	3-942-985-01	KNOB, STAND-BY	
57	3-965-870-01	PLATE, S/S JOINT	
58	3-965-869-01	HOLDER, KNOB	
59	3-730-107-01	SCREW (M2X2.2)	
60	3-736-364-01	SPRING	
61	1-542-312-11	BOOK, MICRO	
62	3-975-396-01	HOLDER, GRILLE	
63	3-975-395-01	HOLDER, MICROPHONE	
64	3-975-398-01	GRILLE, MICROPHONE	

Ref. No.	Part No.	Description	Remarks
66	3-719-601-01	SCREW (B2X5),TAPPING	
67	3-975-397-01	CUSHION, MICROPHONE	
71	X-3947-175-1	PANEL ASSY, F (TRV14E)	
71	X-3947-356-1	PANEL ASSY, F (TRV24E)	
72	A-7073-050-A	MA-296 BOARD, COMPLETE	
73	1-782-154-11	CABLE, FLEXIBLE FLAT 12P	
74	3-972-479-01	SPRING COMPRESSION	
* 75	3-975-428-01	PLATE, MA GROUND	
76	3-975-404-01	KNOB, P	
77	3-975-412-01	LOCK, P	
78	3-975-411-01	HOLDER, P KNOB	
79	3-969-270-01	SPRING, CLICK	
80	3-974-290-01	SPACER, POWER	

5-1-3 (1). CABINET (R), LCD SECTION (EXCEPT TRV14E/TRV24E MODEL)

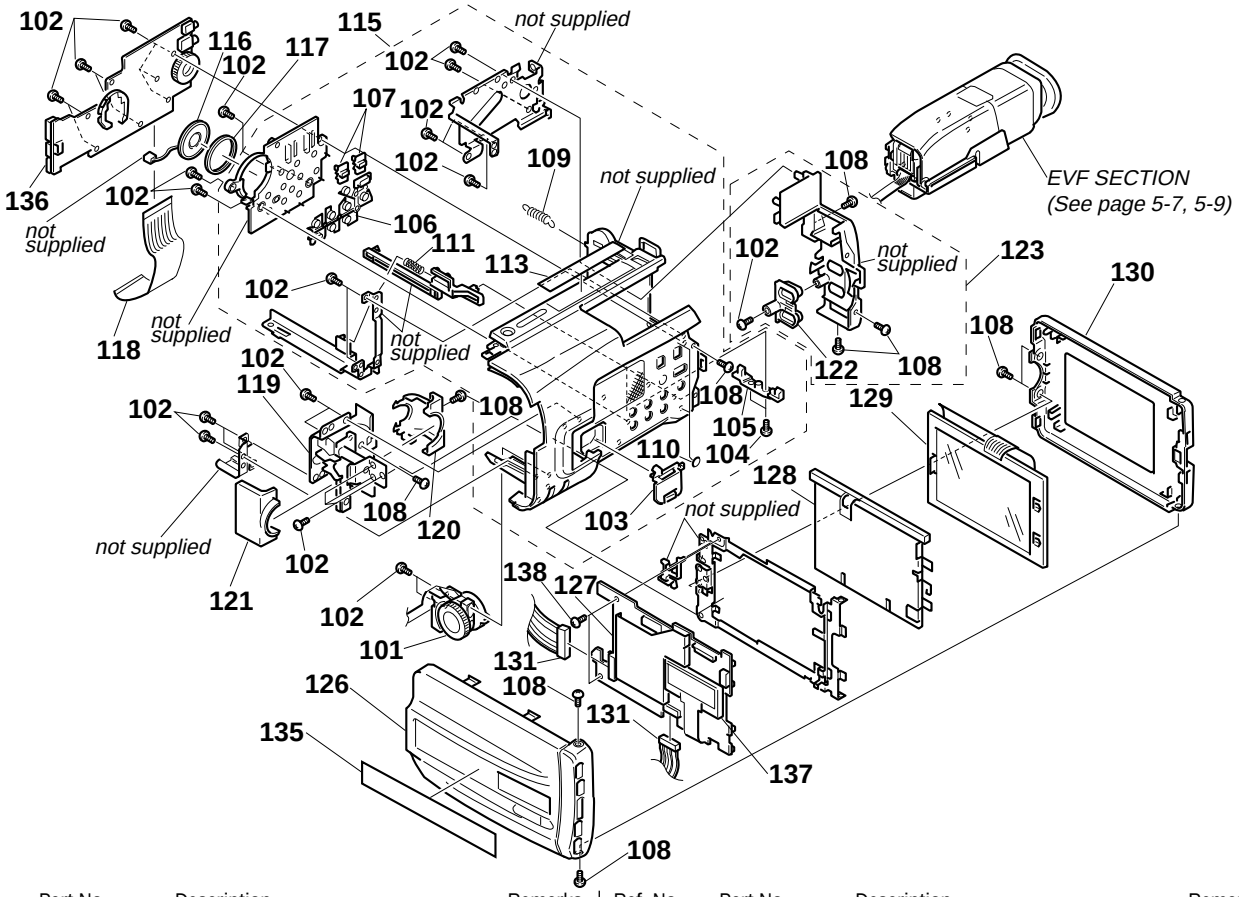

Ref. No.	Part No.	Description	Remarks
101	1-475-068-11	SWITCH BLOCK, CONTROL(MF-7800)	
102	3-719-601-01	SCREW (B2X5),TAPPING	
103	3-968-878-01	LID, LITHIUM BATTERY	
104	3-966-178-01	SCREW (1.7)	
105	3-965-854-01	CLAW, BT LOCK	
106	3-975-378-11	BUTTON (A), CF	
107	3-975-380-01	KNOB, SLIDE	
108	3-719-381-01	SCREW (M2X4)	
109	4-602-490-01	SPRING, TENSION	
110	3-959-978-02	CUSHION, PANEL	
111	3-965-846-01	SPRING, COMPRESSION	
113	3-975-376-01	SHEET, LETTER	
115	X-3947-323-1	CABINET (R) ASSY (TRV32/TRV34/TRV44/TRV44E)	
115	X-3947-335-1	CABINET (R) ASSY (TRV52/TRV53)	
115	X-3947-424-1	CABINET (R) ASSY (TRV512)	
115	X-3947-427-1	CABINET (R) ASSY (TRV312)	
116	1-505-291-11	SPEAKER (DIA 2.8CM)	
117	3-965-367-11	SPACER, SP	
118	1-782-153-11	CABLE, FLEXIBLE FLAT 45P	
119	X-3947-327-1	HINGE ASSY	
120	3-976-130-01	COVER (C), HINGE (TRV32/TRV34/TRV44/TRV52/TRV53/TRV44E)	
120	3-976-130-11	COVER (C), HINGE (TRV312/TRV512)	
121	3-976-099-01	COVER (M), HINGE	
122	3-976-096-01	BUTTON, BF	
123	X-3947-331-1	CABINET (R) ASSY , SUB (TRV32/TRV53)	
123	X-3947-332-1	CABINET (R) ASSY , SUB (TRV34/TRV44/TRV52/TRV44E)	
123	X-3947-426-1	CABINET (R) ASSY , SUB (TRV512)	
123	X-3947-430-1	CABINET (R) ASSY , SUB (TRV312)	
126	X-3947-326-1	CABINET (C) ASSY, PANEL (TRV32/TRV34/TRV44/TRV52/TRV53/TRV44E)	
126	X-3947-428-1	CABINET (C) ASSY, PANEL (TRV312/TRV512)	

Ref. No.	Part No.	Description	Remarks
127	A-7093-277-A	PD-77 BOARD,COMPLETE (TRV32/TRV34/TRV53/TRV312)	
127	A-7093-281-A	PD-76 BOARD,COMPLETE(TRV44E)	
127	A-7093-279-A	PD-76 BOARD,COMPLETE (TRV44/TRV52/TRV512)	
⚠128	1-517-654-11	TUBE, FLUORESCENT COLD CATHODE (TRV32/TRV34/TRV53/TRV312)	
⚠128	1-517-655-11	TUBE, FLUORESCENT COLD CATHODE (TRV44/TRV52/TRV512/TRV44E)	
129	1-801-667-11	INDICATOR MODULE, LIQUID CRYST (TRV44/TRV52/TRV512/TRV44E)	
129	1-801-669-11	INDICATOR MODULE, LIQUID CRYST (TRV32/TRV34/TRV53/TRV312)	
130	X-3947-325-1	CABINET (M) ASSY, P(TRV32/TRV34/TRV53)	
130	X-3947-333-1	CABINET (M) ASSY, P(TRV44/TRV52/TRV44E)	
130	X-3947-425-1	CABINET (M) ASSY, P(TRV512)	
130	X-3947-429-1	CABINET (M) ASSY, P(TRV312)	
131	1-957-152-11	HARNESS (CP-75)	
134	3-976-103-01	SCREEN, WINDOW	
135	3-976-125-01	WINDOW, LCD (TRV32)	
135	3-976-125-11	WINDOW, LCD (TRV53)	
135	3-976-125-21	WINDOW, LCD (TRV44)	
135	3-976-125-31	WINDOW, LCD (TRV44E)	
135	3-976-125-41	WINDOW, LCD (TRV52)	
135	3-976-125-51	WINDOW, LCD (TRV312)	
135	3-976-125-61	WINDOW, LCD (TRV512)	
135	3-976-125-71	WINDOW, LCD (TRV34)	
136	A-7073-137-A	CF-46 BOARD, COMPLETE (TRV32/TRV312)	
136	A-7073-163-A	CF-46 BOARD, COMPLETE (TRV34/TRV44/TRV52/TRV512/TRV44E)	
136	A-7073-189-A	CF-46 BOARD, COMPLETE (TRV53)	
137	1-801-697-11	DISPLAY PANEL, LIQUID CRYSTAL	
138	3-713-786-21	SCREW (M2X3)	

Note :
The components identified by mark ⚠ or dotted line with mark ⚠ are critical for safety.
Replace only with part number specified.

Note :
Les composants identifiés par une marque ⚠ sont critiques pour la sécurité.
Ne les remplacer que par une pièce portant le numéro spécifie.

5-1-3 (2). CABINET (R), LCD SECTION (TRV14E/TRV24E MODEL)

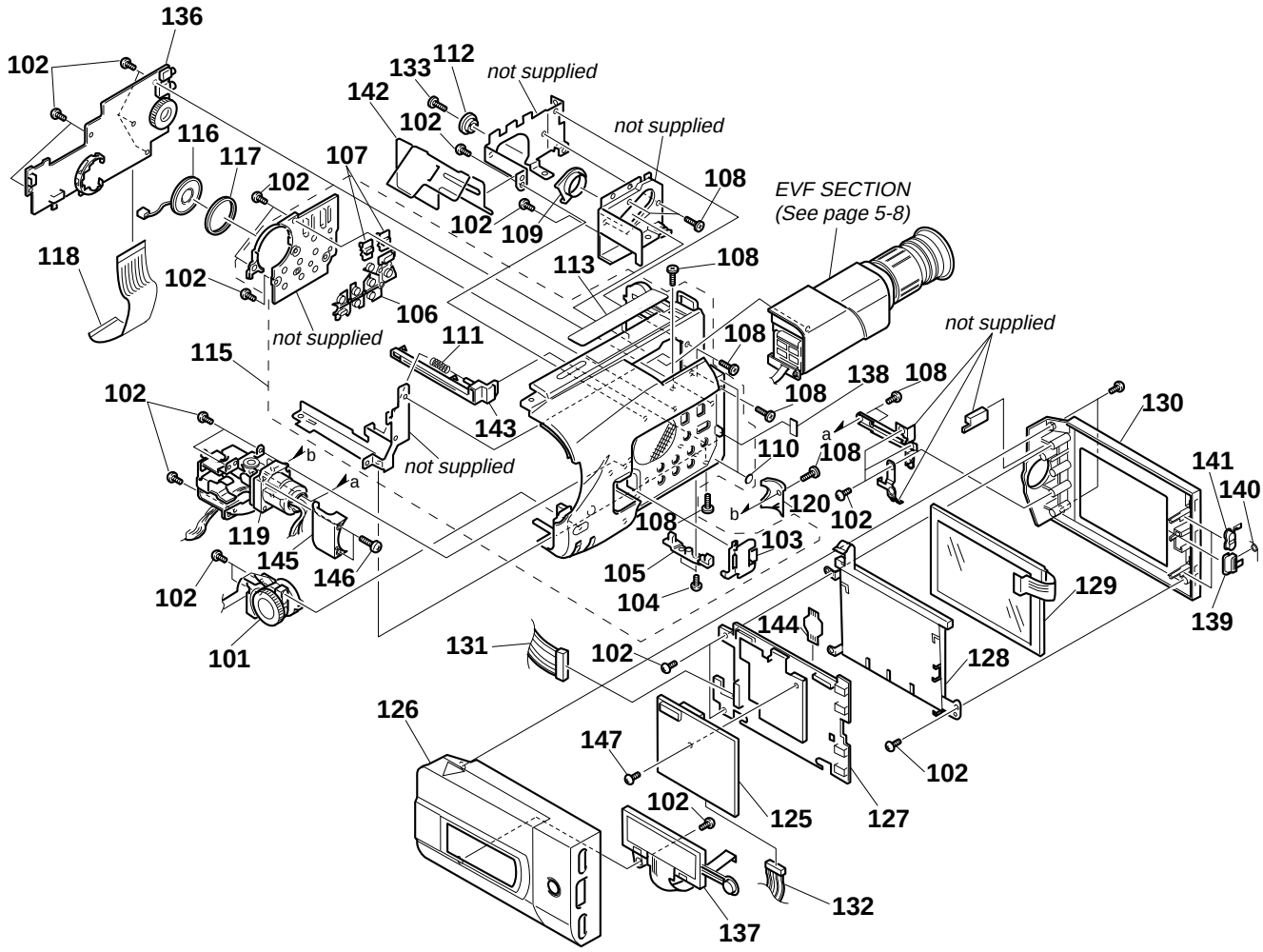

Ref. No.	Part No.	Description	Remarks
101	1-475-068-11	SWITCH BLOCK, CONTROL(MF-7800)	
102	3-719-601-01	SCREW (B2X5),TAPPING	
103	3-968-878-01	LID, LITHIUM BATTERY	
104	3-966-178-01	SCREW (1.7)	
105	3-965-854-01	CLAW, BT LOCK	
106	3-975-378-01	BUTTON (A), CF (TRV14E)	
106	3-975-378-11	BUTTON (A), CF (TRV24E)	
107	3-975-380-01	KNOB, SLIDE	
108	3-719-381-01	SCREW (M2X4)	
109	3-974-326-01	FLANGE, SLIDER	
110	3-959-978-02	CUSHION, PANEL	
111	3-965-846-01	SPRING, COMPRESSION	
112	3-974-325-01	FLANGE, ROTARY	
113	3-975-376-01	SHEET, LETTER	
115	X-3947-168-1	CABINET (R) ASSY (TRV14E)	
115	X-3947-357-1	CABINET (R) ASSY (TRV24E:E)	
115	X-3947-403-1	CABINET (R) ASSY (TRV24E:AEP)	
116	1-505-291-11	SPEAKER (DIA 2.8CM)	
117	3-965-367-11	SPACER, SP	
118	1-782-153-11	CABLE, FLEXIBLE FLAT 45P	
119	X-3947-171-1	HINGE ASSY	
120	3-975-373-01	COVER (LOWER), HINGE	
125	A-7093-271-A	SD-25 BOARD, COMPLETE (TRV14E)	
125	A-7093-274-A	SD-24 BOARD, COMPLETE (TRV24E)	

Ref. No.	Part No.	Description	Remarks
126	X-3947-169-1	CABINET (C) ASSY, P (TRV14E)	
126	X-3947-404-1	CABINET (C) ASSY, P (TRV24E)	
127	A-7093-270-A	PD-75 BOARD, COMPLETE(TRV14E)	
127	A-7093-273-A	PD-74 BOARD, COMPLETE (TRV24E)	
⚠128	1-517-524-51	TUBE, FLUORESCENT COLD CATHODE	
129	1-801-666-11	INDICATOR MODULE, LIQUID CRYST (TRV14E)	
130	X-3947-170-1	CABINET (M) ASSY, P	
131	1-957-150-11	HARNESS (CP-74)	
132	1-957-151-11	HARNESS (CS-111)	
133	3-713-790-31	SCREW (M2X8), TAPPING, P3	
136	A-7073-052-A	CF-45 BOARD, COMPLETE (TRV14E)	
136	A-7073-159-A	CF-45 BOARD, COMPLETE (TRV24E)	
137	1-801-697-21	DISPLAY PANEL, LIQUID CRYSTAL	
138	3-975-408-01	CUSHION, PANEL LOCK	
139	3-975-419-01	BUTTON, PANEL LOCK	
140	3-975-420-01	SPRING, LOCK	
141	3-975-421-01	BUTTON, BRIGHT	
* 142	3-975-685-01	GUIDE, VF FLEXIBLE	
143	3-975-388-01	CLAW, BATTERY	
144	1-660-433-11	FP-410 FLEXIBLE BOARD	
145	3-975-384-01	COVER (UPPER) HINGE	
146	3-768-729-41	SCREW (M2X8)	
147	3-968-729-61	SCREW (M2X3)	

Note :
The components identified by mark ⚠ or dotted line with mark ⚠ are critical for safety.
Replace only with part number specified.

Note :
Les composants identifiés par une marque ⚠ sont critiques pour la sécurité.
Ne les remplacer que par une pièce portant le numéro spécifié.

5-1-4. MAIN SECTION

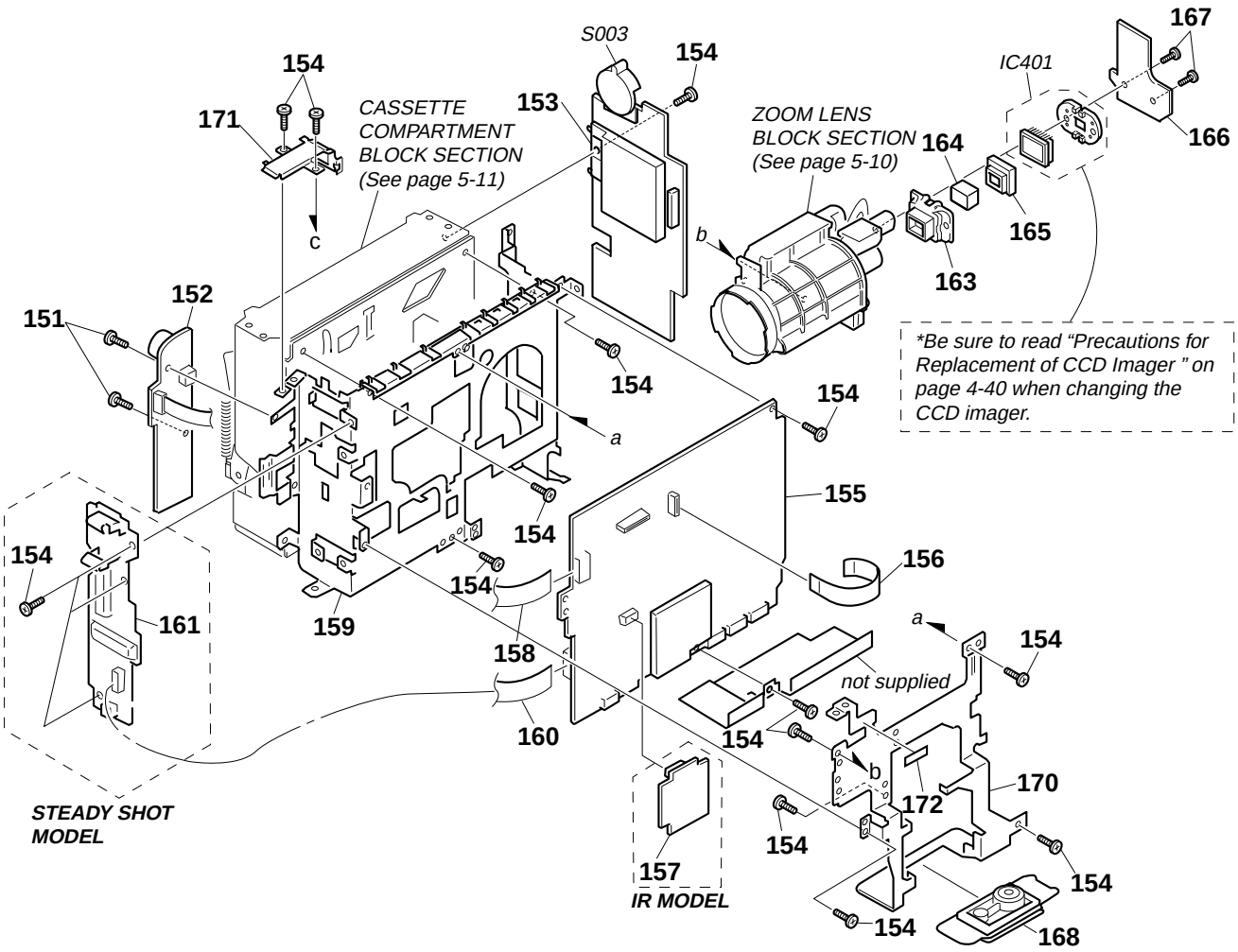

Ref. No.	Part No.	Description	Remarks
151	3-968-729-01	SCREW (M2), LOCK ACE, P2	
152	A-7073-058-A	JK-154 BOARD, COMPLETE (TRV14E/TRV24E)	
152	A-7073-134-A	JK-155 BOARD, COMPLETE (TRV32/TRV53/TRV312/TRV512)	
152	A-7073-162-A	JK-155 BOARD, COMPLETE (TRV34/TRV44/TRV52/TRV44E)	
153	A-7093-269-A	DD-94 BOARD, COMPLETE (TRV14E/TRV24E/TRV44E)	
153	A-7093-276-A	DD-94 BOARD, COMPLETE (TRV32/TRV34/TRV44/TRV52/TRV53/TRV312/TRV512)	
154	3-713-786-21	SCREW (M2X3)	
155	A-7093-268-A	VC-188 BOARD, COMPLETE (TRV14E)	
155	A-7093-275-A	VC-188 BOARD, COMPLETE (TRV32/TRV312)	
155	A-7093-272-A	VC-188 BOARD, COMPLETE (TRV24E)	
155	A-7093-280-A	VC-188 BOARD, COMPLETE (TRV44E)	
155	A-7093-283-A	VC-188 BOARD, COMPLETE (TRV53)	
155	A-7093-282-A	VC-188 BOARD, COMPLETE (TRV52/TRV512)	
155	A-7093-278-A	VC-188 BOARD, COMPLETE (TRV34/TRV44)	
156	1-782-155-11	CABLE, FLEXIBLE FLAT 16P	
157	A-7073-091-A	IR-28 BOARD, COMPLETE (TRV53)	
158	1-665-151-11	FP-550 FLEXIBLE BOARD	
* 159	3-975-367-01	FRAME, MD	
160	1-665-150-11	FP-549 FLEXIBLE BOARD (EXCEPT TRV14E)	
161	A-7073-145-A	SE-60 BOARD, COMPLETE (EXCEPT TRV14E/TRV53)	

Ref. No.	Part No.	Description	Remarks
163	3-963-467-11	ADAPTOR (FH), CCD FITTING	
164	1-547-787-41	FILTER BLOCK, OPTICAL (EXCEPT TRV14E)	
164	1-547-924-41	FILTER BLOCK, OPTICAL (TRV14E)	
165	3-961-192-01	RUBBER (FH), SEAL (EXCEPT TRV14E)	
165	3-968-054-11	RUBBER (FM), SHIELD (TRV14E)	
166	A-7073-057-A	CD-164 BOARD, COMPLETE (TRV14E/TRV24E)	
166	A-7073-133-A	CD-165 BOARD, COMPLETE (EXCEPT TRV14E/TRV24E)	
167	3-318-203-11	SCREW (B1.7X6), TAPPING	
168	3-965-871-01	SCREW, TRIPOD	
169	X-3947-174-1	PLATE ASSY, REGURATION (TRV14E/TRV24E)	
* 170	3-975-366-01	FRAME, LENS (TRV14E/TRV24E)	
* 170	3-975-366-11	FRAME, LENS (EXCEPT TRV14E/TRV24E)	
* 171	3-975-364-01	BRACKET, SHOE	
172	3-976-740-01	SHEET, LENS	
IC401	A-7030-638-A	CCD BLOCK ASSY (MN37240FP) (TRV32/TRV52/TRV53/TRV312/TRV512)	
IC401	A-7030-779-A	CCD BLOCK ASSY (ICX207AK-13)(TRV14E)	
IC401	A-7030-782-A	CCD BLOCK ASSY (ICX211AK-43) (TRV24E/TRV44E)	
IC401	A-7030-791-A	CCD BLOCK ASSY (ICX209AK-43) (TRV34/TRV44)	
S003	1-762-441-21	SWITCH, ROTARY (ZOOM SW)	

5-1-5 (1). EVF SECTION (TRV53 MODEL)

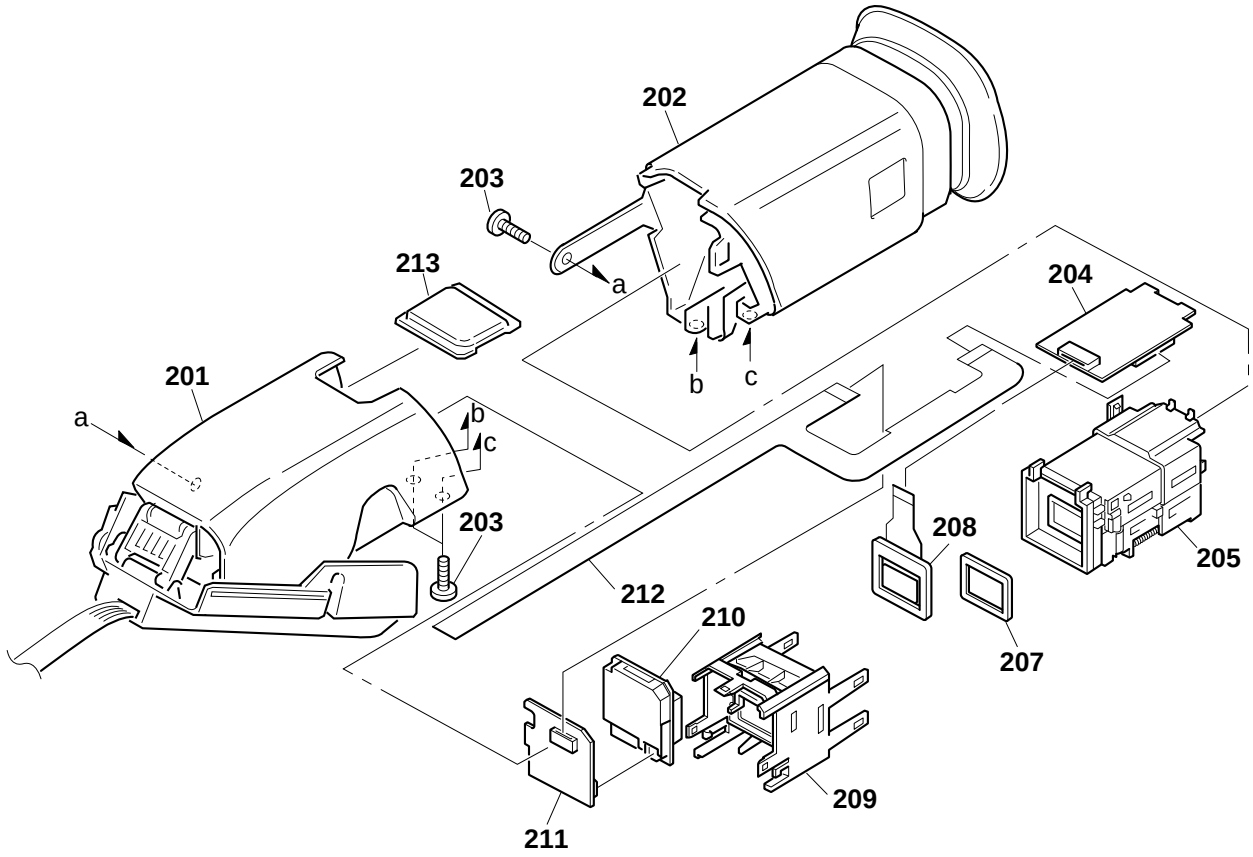

Ref. No.	Part No.	Description	Remarks
201	X-3947-337-1	CABINET (FRONT (C)) ASSY, EVF	
202	X-3947-338-1	CABINET (REAR (C)) ASSY, EVF	
203	3-948-339-01	SCREW, TAPPING	
204	A-7073-085-A	VF-110 BOARD, COMPLETE	
205	X-3946-887-1	VF LENS ASSY	
* 207	3-960-302-11	CUSHION (1), LCD	
208	8-756-015-31	LCX005BK-5	
209	X-3946-886-1	HOLDER ASSY, PRISM	
210	A-7073-086-A	LB-49 BOARD, COMPLETE	
211	A-7073-084-A	VF-109 BOARD, COMPLETE	
212	1-665-152-11	FP-551 FLEXIBLE BOARD	
213	3-976-118-01	WINDOW, SOLAR	

5-1-5 (2). EVF SECTION (TRV14E/TRV24E MODEL)

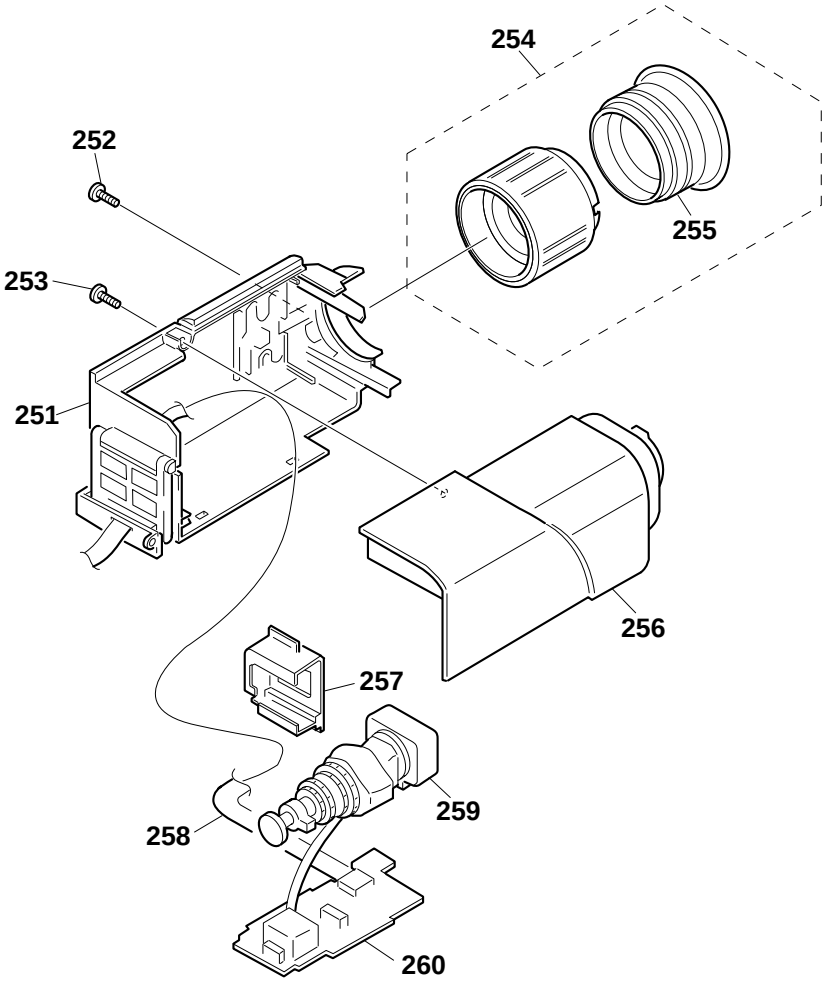

Ref. No.	Part No.	Description	Remarks
251	X-3946-883-1	CABINET (L) ASSY, EVF	
252	3-975-898-01	SCREW (T), F LOCK	
253	3-948-339-01	SCREW, TAPPING	
254	X-3944-966-1	FINDER ASSY	
255	3-963-391-01	EYE CUP	
256	3-974-155-01	CABINET (R), EVF	
* 257	X-3947-303-1	COVER ASSY, CRT	
258	1-782-156-11	CABLE, FLEXIBLE FLAT 5P	
⚠259	1-452-673-31	CRT ASSY (M01KXX90WB)	
260	A-7073-078-A	VF-102 BOARD, COMPLETE	

Note :	**Note :**
The components identified by mark ⚠ or dotted line with mark ⚠ are critical for safety. Replace only with part number specified.	Les composants identifiés par une marque ⚠ sont critiques pour la sécurité. Ne les remplacer que par une pièce portant le numéro spécifie.

5-1-5 (3). EVF SECTION (EXCEPT TRV53/TRV14E/TRV24E MODEL)

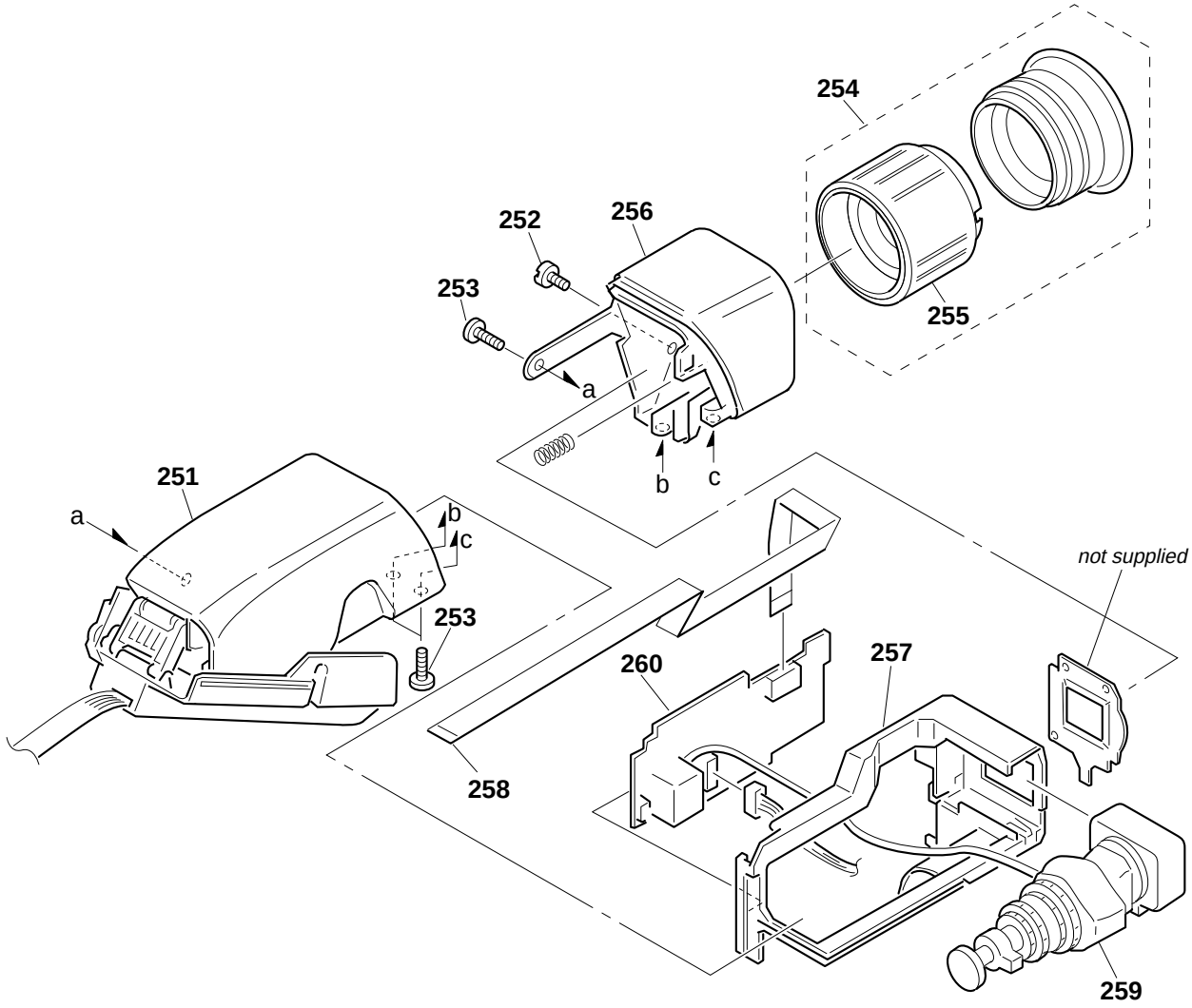

Ref. No.	Part No.	Description	Remarks
251	X-3947-328-1	CABINET (FRONT (B)) ASSY, EVF (TRV32/TRV34/TRV44/TRV52/TRV44E)	
251	X-3947-431-1	CABINET (FRONT (B)) ASSY, EVF (TRV312/TRV512)	
252	3-975-898-01	SCREW (T), F LOCK	
253	3-948-339-01	SCREW, TAPPING	
254	X-3944-966-1	FINDER ASSY	
255	3-963-391-01	EYE CUP	
256	X-3947-329-1	CABINET (REAR (B)) ASSY, EVF (TRV32/TRV34/TRV44/TRV52/TRV44E)	
256	X-3947-432-1	CABINET (REAR (B)) ASSY, EVF (TRV312/TRV512)	
* 257	X-3947-330-1	HOLDER ASSY, VF PC BOARD	
258	1-782-156-11	CABLE, FLEXIBLE FLAT 5P	
⚠259	1-452-673-31	CRT ASSY (M01KXX90WB)	
260	A-7073-078-A	VF-102 BOARD, COMPLETE (TRV44E)	
260	A-7073-135-A	VF-102 BOARD, COMPLETE (TRV32/TRV34/TRV44/TRV52/TRV312/TRV512)	

Note :	**Note :**
The components identified by mark ⚠ or dotted line with mark ⚠ are critical for safety. Replace only with part number specified.	Les composants identifiés par une marque ⚠ sont critiques pour la sécurité. Ne les remplacer que par une pièce portant le numéro spécifie.

5-1-6. ZOOM LENS BLOCK SECTION (LSV-510A)

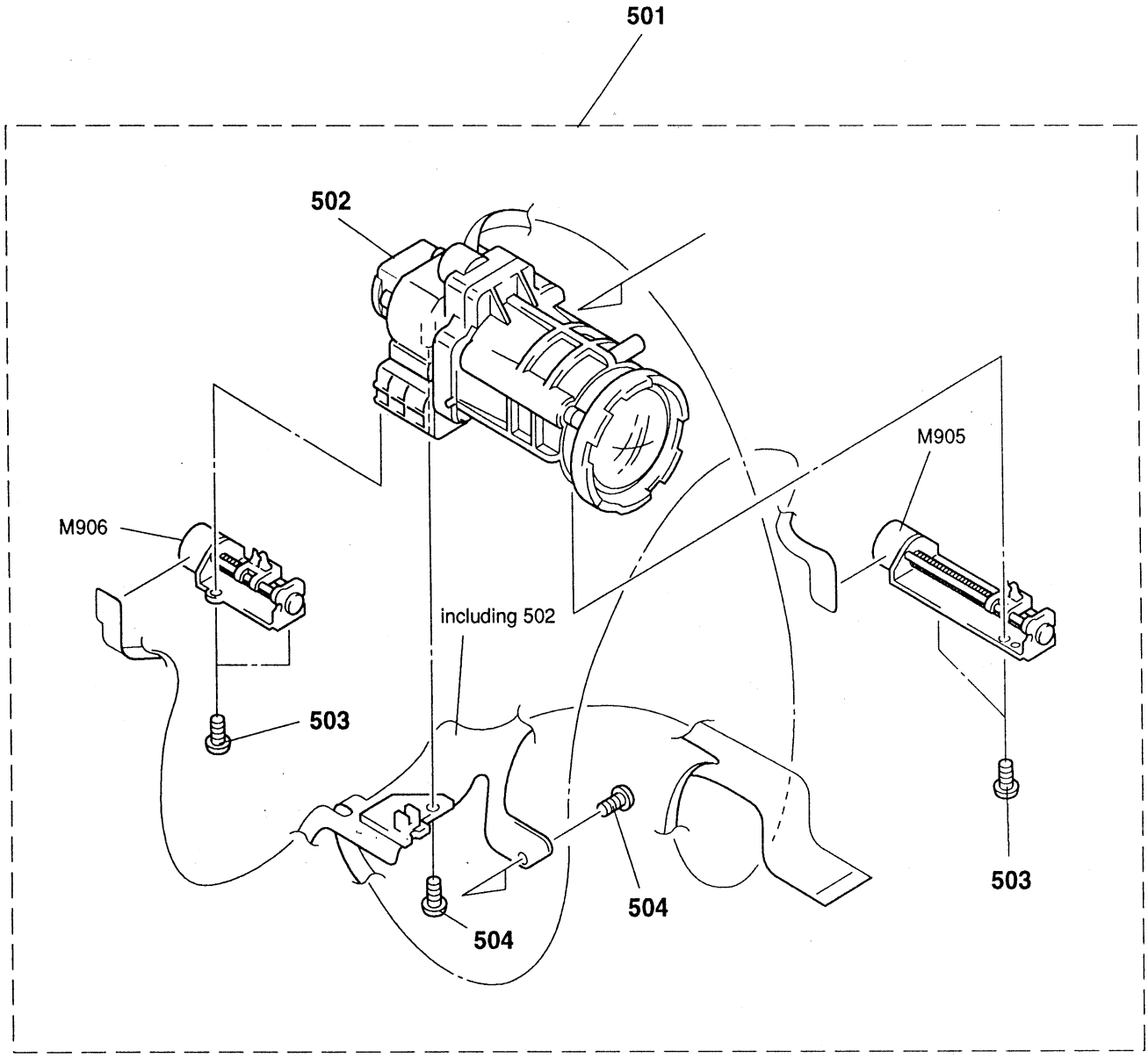

Ref. No.	Part No.	Description	Remarks
501	8-848-710-01	LENS, ZOOM (LSV-510A)	
502	A-4910-808-A	LSV-510A LENS DEVICE	
503	3-713-791-41	SCREW (M1.7X5), TAPPING, P2	
504	3-708-302-01	SCREW (BT3 P1.7X4C)	
M905	1-698-760-01	STEPPING MOTOR (FOCUS)	
M906	1-698-759-01	STEPPING MOTOR (ZOOM)	

5-1-7. CASSETTE COMPARTMENT BLOCK SECTION

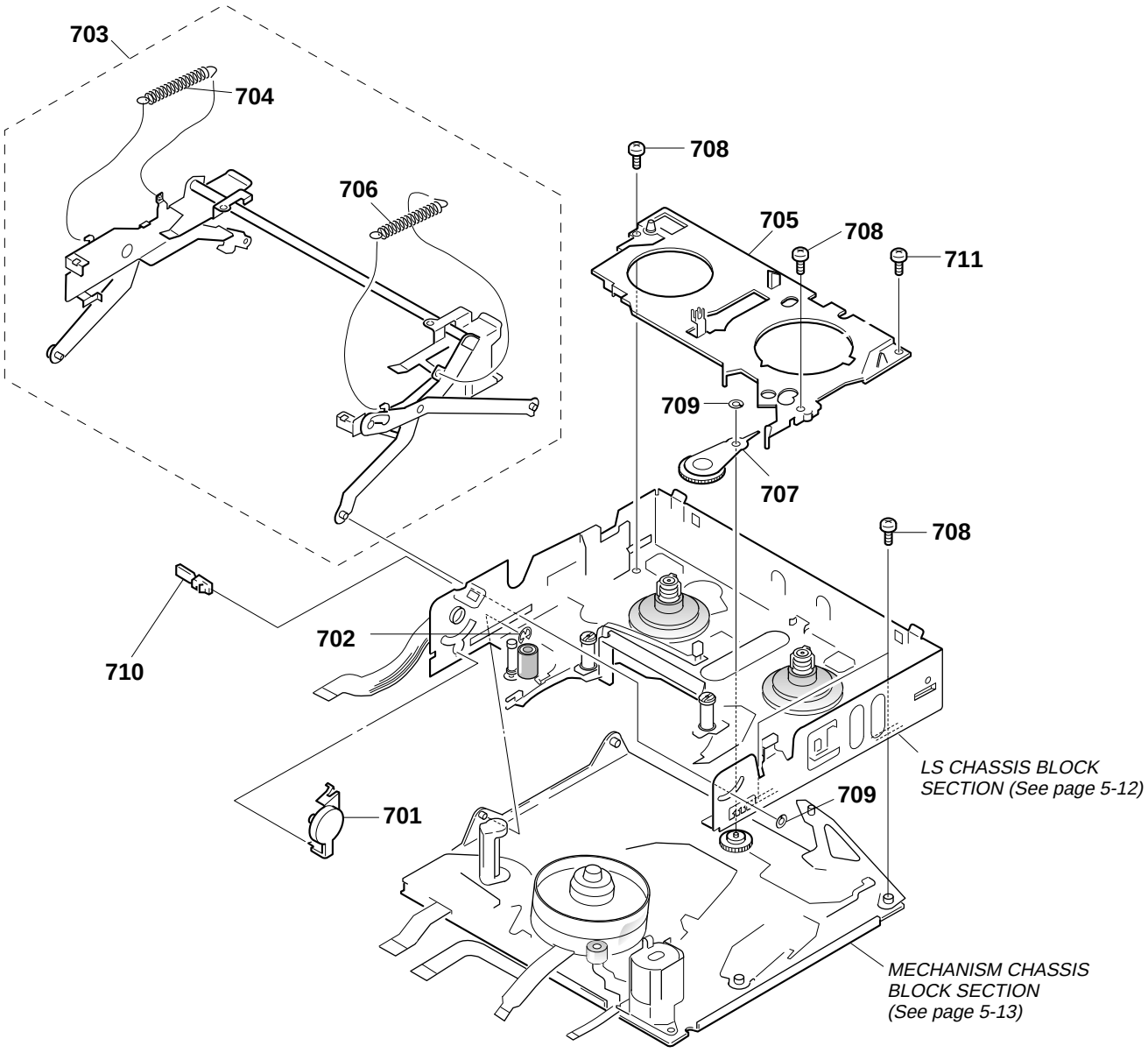

Ref. No.	Part No.	Description	Remarks
701	A-7040-421-A	DAMPER ASSY	
702	7-624-102-04	STOP RING 1.5, TYPE -E	
703	X-3945-400-1	CASSETTE COMPARTMENT ASSY	
704	3-965-587-03	SPRING, TENSION	
705	3-965-584-01	RETAINER, GOOSENECK	
706	3-973-268-01	SPRING, TENSION	
707	X-3945-399-1	GEAR ASSY, GOOSENECK	
708	3-947-503-01	SCREW (M1.4X2.5)	
709	3-727-176-01	WASHER	
710	3-971-076-01	FASTENER, D	
711	3-976-055-01	SCREW (M1.4X1)	

5-1-8. LS CHASSIS BLOCK SECTION

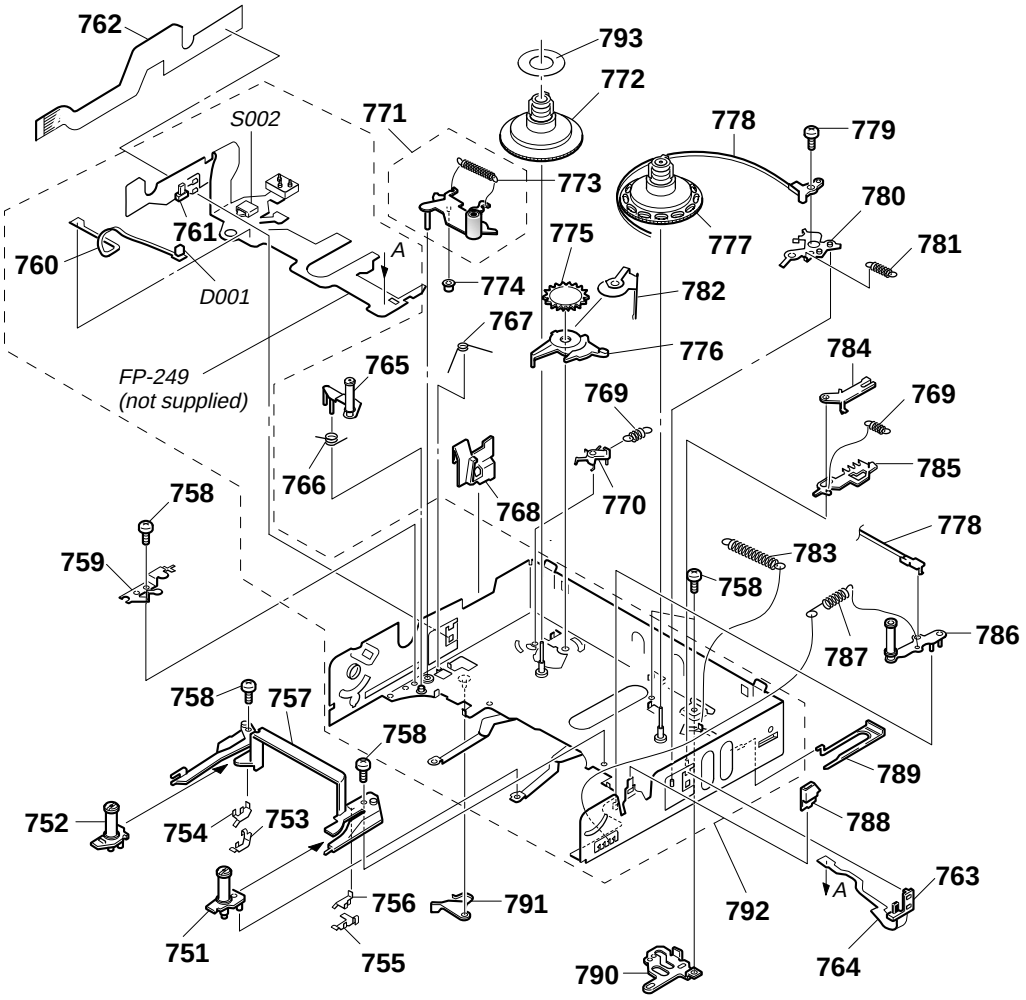

Ref. No.	Part No.	Description	Remarks
751	A-7040-419-A	BASE (S) BLOCK ASSY, GUIDE	
752	A-7040-418-B	BASE (T) BLOCK ASSY, GUIDE	
753	3-965-559-01	STOPPER (T)	
754	3-965-557-01	STOPPER (T), GB	
755	3-965-558-01	STOPPER (S)	
756	3-965-556-01	STOPPER (S), GB	
757	3-965-553-01	RAIL, GUIDE	
758	3-947-503-01	SCREW (M1.4X2.5)	
759	3-965-573-01	RETAINER, TG4	
760	1-658-213-11	FP-355 FLEXIBLE PRINT BOARD	
761	3-965-552-01	HOLDER (T), SENSOR	
762	1-657-786-11	FP-221 FLEXIBLE BOARD	
763	3-965-551-01	HOLDER (S), SENSOR	
764	1-658-214-11	FP-356 FLEXIBLE PRINT BOARD	
765	A-7040-417-A	ARM BLOCK ASSY, TG4	
766	3-965-574-01	SPRING, TORSION	
767	3-965-575-01	SPRING (PINCH), TORSION	
768	3-965-568-01	GUIDE, LOCK	
769	3-965-562-01	SPRING (RATCHET), TENSION	
770	3-965-581-01	RATCHET, T	
771	X-3945-394-1	ARM ASSY, PINCH	
772	X-3945-398-1	DECK ASSY, REEL, T	
773	3-965-648-01	SPRING (PINCH), TENSION	
774	3-965-579-01	ROLLER, PINCH PRESS	
775	3-965-563-01	GEAR, T SOFT	
776	3-965-565-01	CLAW, T SOFT	
777	X-3945-397-1	DECK ASSY, REEL, S	
778	X-3945-396-1	BAND ASSY, TENSION REGULATOR	
779	3-945-756-01	SCREW (M1.4X3)	
780	3-965-583-01	ARM, RVS	
781	3-965-580-01	SPRING, TENSION	
782	3-966-384-01	SPRING, T SOFT	
783	3-965-578-01	SPRING, TENSION	
784	3-965-560-01	RATCHET, S	
785	3-965-561-01	PLATE, RELEASE, S RATCHET	
786	X-3945-395-1	ARM ASSY, TG1	
787	3-965-576-01	SPRING (TG1), TENSION	
788	3-965-567-01	LID OPEN	
789	3-965-566-01	COVER, LS GUIDE	
* 790	3-965-577-01	PLATE, CAM, LS	
791	3-965-569-01	ARM, EJ	
792	A-7040-427-A	CHASSIS (S1) ASSY, LS	
* 793	3-972-838-01	SPACER, REEL	
D001	8-719-988-42	DIODE GL453	
S002	1-572-688-11	SWITCH, PUSH (1 KEY)(C.C.LOCK)	

5-1-9. MECHANISM CHASSIS BLOCK SECTION

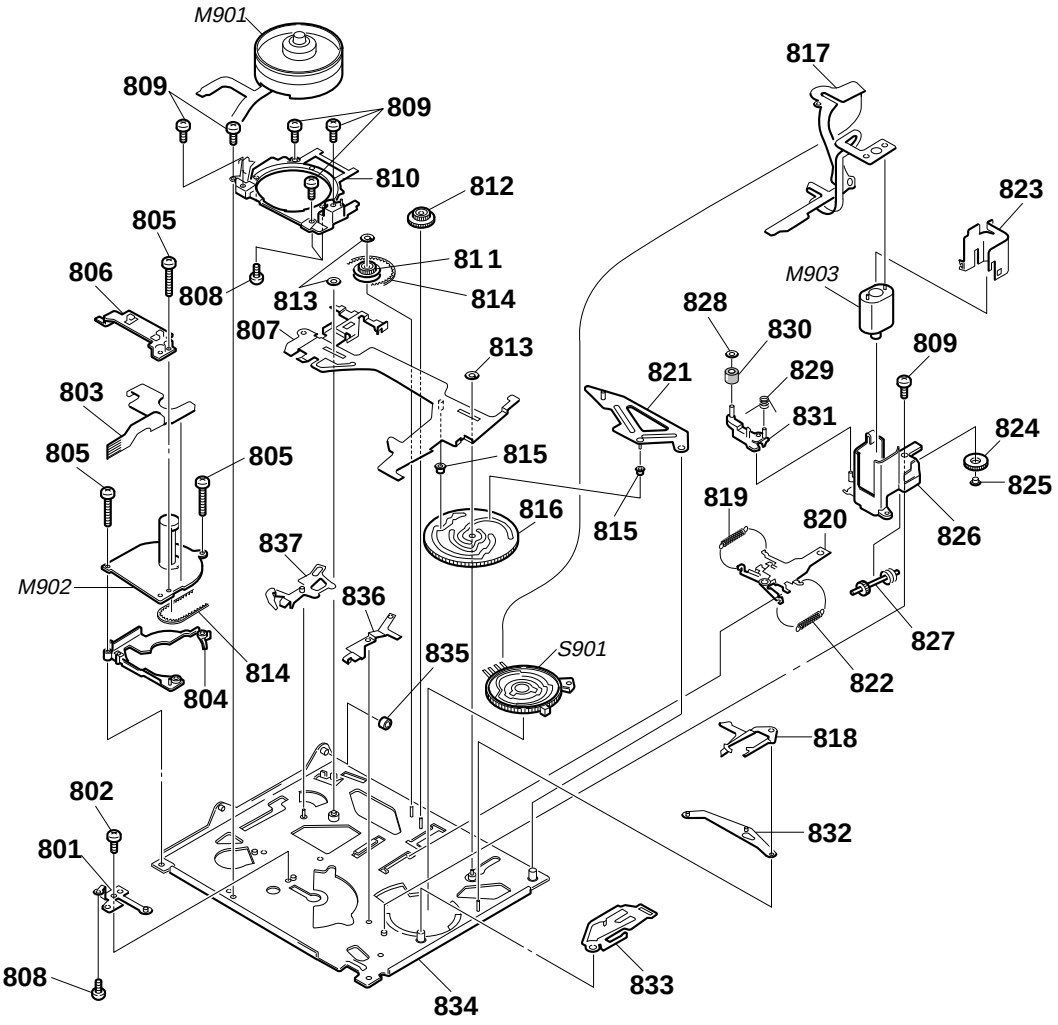

Ref. No.	Part No.	Description	Remarks
801	X-3947-343-1	GROUND (IM) ASSY, SHAFT	
802	3-965-550-02	SCREW (M1.7X1.6)	
803	1-657-785-11	FP-248 FLEXIBLE BOARD	
804	3-965-545-01	SPACER, CAPSTAN	
805	3-965-549-01	SCREW (M1.4 X 6.5)	
806	3-966-349-01	HOLDER, FLEXIBLE	
807	3-971-644-01	SLIDER (2), M	
808	3-965-588-11	SCREW (M1.4)	
809	3-947-503-01	SCREW (M1.4X2.5)	
810	A-7040-416-A	BASE BLOCK ASSY, DRUM	
811	3-965-527-01	GEAR, CHANGE	
812	3-965-544-01	GEAR, RELAY	
813	3-331-007-21	WASHER	
814	3-965-546-01	BELT, TIMING	
815	3-965-533-01	ROLLER, LS	
816	3-965-528-01	GEAR, CAM	
817	1-657-784-11	FP-220 FLEXIBLE BOARD	
818	3-965-529-01	PLATE, REGULATOR, TENSION	
819	3-965-536-01	SPRING, TENSION	
820	X-3945-388-1	SLIDER ASSY, GL	
821	3-965-532-01	ARM, LS	

Ref. No.	Part No.	Description	Remarks
822	3-965-535-01	SPRING, TENSION	
823	3-965-542-01	SHIELD, MOTOR	
824	3-965-539-01	GEAR (A)	
825	3-965-538-01	SLEEVE, MOTOR HOLDER	
826	3-965-540-01	HOLDER, MOTOR	
827	3-965-541-01	SHAFT, WORM	
828	3-321-393-01	WASHER, STOPPER	
829	3-965-724-01	SPRING, TORSION	
830	A-7040-423-A	ROLLER BLOCK ASSY, HC	
831	X-3945-407-1	ARM ASSY, HC ROLLER	
832	3-965-531-01	ARM, GL	
833	3-965-530-01	PLATE (2), REGULATOR, TENSION	
834	X-3946-548-2	CHASSIS ASSY, MECHANICAL	
835	3-965-526-02	ROLLER, LS GUIDE	
836	3-965-547-01	ARM, HC DRIVING	
837	3-965-534-01	PLATE, PRESS, PINCH	
M901	A-7048-851-A	DRUM BLOCK ASSY (DGH-0D5A-R)(PAL)	
M901	A-7048-849-A	DRUM BLOCK ASSY (DGH-0D4A-R)(NTSC)	
M902	8-835-531-32	MOTOR, DC SCE-0601A/C-NP (CAPSTAN)	
M903	X-3945-401-1	MOTOR ASSY, DC (LOADING)	
S901	1-762-436-15	SWITCH, ROTARY (ENCODER)	

5-2. ELECTRICAL PARTS LIST

NOTE:

When indicating parts by reference number, please include the board naame.

The components identified by mark ⚠ or dotted line with mark ⚠ are critical for safety. Replace only with part number specified.

Les composants identifiés par une marque ⚠ sont critiques pour la sécurité. Ne les remplacer que par une pièce portant le numéro spécifie.

- Due to standardization, replacements in the parts list may be different from the parts specified in the diagrams or the components used on the set.
- -XX, -X mean standardized parts, so they may have some difference from the original one.
- Items marked "*" are not stocked since they are seldom required for routine service. Some delay should be anticipated when ordering these items.
- CAPACITORS:
  uF: µF
- RESISTORS
  All resistors are in ohms.
  METAL: metal-film resistor
  METAL OXIDE: Metal Oxide-film resistor
  F: nonflammable
- COILS
  uH: µH
- SEMICONDUCTORS
  In each case, u: µ, for example:
  uA...: µA... , uPA... , µPA... ,
  uPB... , µPB... , uPC... , µPC... ,
  uPD..., µPD...

Ref. No.	Part No.	Description			Remarks
	A-7073-057-A	CD-164 BOARD, COMPLETE (TRV14E/TRV24E)			
		**********			
	A-7073-133-A	CD-165 BOARD, COMPLETE			
		**********			
					(EXCEPT TRV14E/TRV24E)
					(Ref.No.2,000 Series)
		< CAPACITOR >			
C401	1-164-156-11	CERAMIC CHIP	0.1uF		25V
C405	1-126-603-11	ELECT CHIP	4.7uF	20%	35V
C406	1-126-603-11	ELECT CHIP	4.7uF	20%	35V
		< CONNECTOR >			
CN401	1-691-380-21	CONNECTOR, FFC/FPC 16P			
		< IC >			
IC401	A-7030-638-A	CCD BLOCK ASSY (MN37240FP)			
					(TRV32/TRV52/TRV53/TRV312/TRV512)
IC401	A-7030-779-A	CCD BLOCK ASSY (ICX207AK-13)(TRV14E)			
IC401	A-7030-782-A	CCD BLOCK ASSY (ICX211AK-43)			
					(TRV24E/TRV44E)
IC401	A-7030-791-A	CCD BLOCK ASSY (ICX209AK-43)			
					(TRV34/TRV44)
		< COIL >			
L401	1-414-757-11	INDUCTOR 100uH			
		< TRANSISTOR >			
Q401	8-729-232-86	TRANSISTOR 2SK1875-BL/V			
Q402	8-729-117-73	TRANSISTOR 2SC4178-F14			
		< RESISTOR >			
R403	1-216-833-11	METAL CHIP	10K	5%	1/16W
R404	1-216-829-11	METAL CHIP	4.7K	5%	1/16W
R407	1-216-295-91	CONDUCTOR, CHIP (2012)			
	A-7073-052-A	CF-45 BOARD, COMPLETE (TRV14E)			
		**********			
	A-7073-159-A	CF-45 BOARD, COMPLETE (TRV24E)			
		**********			
	A-7073-163-A	CF-46 BOARD, COMPLETE			
		**********			
					(TRV34/TRV44/TRV52/TRV512/TRV44E)
	A-7073-137-A	CF-46 BOARD, COMPLETE (TRV32/TRV312)			
		**********			
	A-7073-189-A	CF-46 BOARD, COMPLETE (TRV53)			
		**********			
					(Ref.No.2,000 Series)
	3-831-441-XX	CUSHION (5)			

Ref. No.	Part No.	Description			Remarks
		< BATTERY >			
BH401	1-550-104-11	HOLDER, BATTERY			
		< CAPACITOR >			
C401	1-164-004-11	CERAMIC CHIP	0.1uF	10%	25V
C402	1-164-004-11	CERAMIC CHIP	0.1uF	10%	25V
C405	1-162-974-11	CERAMIC CHIP	0.01uF		50V
C406	1-165-176-11	CERAMIC CHIP	0.047uF	10%	16V
C407	1-164-156-11	CERAMIC CHIP	0.1uF		25V
C408	1-107-682-11	CERAMIC CHIP	1uF	10%	16V
C409	1-162-968-11	CERAMIC CHIP	0.0047uF	10%	50V
C410	1-104-847-11	TANTAL. CHIP	22uF	20%	4V
C412	1-164-156-11	CERAMIC CHIP	0.1uF		25V
C413	1-164-156-11	CERAMIC CHIP	0.1uF		25V
C414	1-104-908-11	TANTAL. CHIP	47uF	20%	4V
C415	1-162-919-11	CERAMIC CHIP	22PF	5%	50V
C416	1-162-919-11	CERAMIC CHIP	22PF	5%	50V
C417	1-104-847-11	TANTAL. CHIP	22uF	20%	4V
C418	1-162-970-11	CERAMIC CHIP	0.01uF	10%	25V
C419	1-165-176-11	CERAMIC CHIP	0.047uF	10%	16V
C421	1-165-176-11	CERAMIC CHIP	0.047uF	10%	16V
C422	1-165-176-11	CERAMIC CHIP	0.047uF	10%	16V
C424	1-165-176-11	CERAMIC CHIP	0.047uF	10%	16V
C425	1-165-176-11	CERAMIC CHIP	0.047uF	10%	16V
C426	1-165-176-11	CERAMIC CHIP	0.047uF	10%	16V
C427	1-165-176-11	CERAMIC CHIP	0.047uF	10%	16V
C429	1-165-176-11	CERAMIC CHIP	0.047uF	10%	16V
C430	1-165-176-11	CERAMIC CHIP	0.047uF	10%	16V
C431	1-165-176-11	CERAMIC CHIP	0.047uF	10%	16V
C432	1-165-176-11	CERAMIC CHIP	0.047uF	10%	16V
C433	1-165-176-11	CERAMIC CHIP	0.047uF	10%	16V
C434	1-162-970-11	CERAMIC CHIP	0.01uF	10%	25V
C435	1-162-970-11	CERAMIC CHIP	0.01uF	10%	25V
C437	1-135-259-11	TANTAL. CHIP	10uF	20%	6.3V
C438	1-162-970-11	CERAMIC CHIP	0.01uF	10%	25V
C439	1-135-259-11	TANTAL. CHIP	10uF	20%	6.3V
C440	1-113-642-11	TANTAL. CHIP	47uF	20%	10V
C441	1-164-005-11	CERAMIC CHIP	0.47uF		25V
C442	1-164-156-11	CERAMIC CHIP	0.1uF		25V
C443	1-164-156-11	CERAMIC CHIP	0.1uF		25V
C444	1-164-346-11	CERAMIC CHIP	1uF		16V
C445	1-164-005-11	CERAMIC CHIP	0.47uF		25V
C446	1-164-005-11	CERAMIC CHIP	0.47uF		25V
C448	1-162-965-11	CERAMIC CHIP	0.0015uF	10%	50V
C449	1-164-489-11	CERAMIC CHIP	0.22uF	10%	16V
C450	1-162-965-11	CERAMIC CHIP	0.0015uF	10%	50V
C451	1-164-489-11	CERAMIC CHIP	0.22uF	10%	16V
C452	1-104-908-11	TANTAL. CHIP	47uF	20%	4V
C453	1-104-908-11	TANTAL. CHIP	47uF	20%	4V
					(TRV34/TRV44/TRV52/TRV512/TRV44E)

Ref. No.	Part No.	Description			Remarks
C454	1-162-974-11	CERAMIC CHIP	0.01uF		50V
C455	1-164-227-11	CERAMIC CHIP	0.022uF	10%	25V
C456	1-135-181-21	TANTALUM CHIP	4.7uF	20%	6.3V
C458	1-162-961-11	CERAMIC CHIP	330PF	10%	50V
C461	1-164-357-11	CERAMIC CHIP	1000PF	5%	50V (TRV14E/TRV24E)
C462	1-164-357-11	CERAMIC CHIP	1000PF	5%	50V (TRV14E/TRV24E)
C465	1-164-357-11	CERAMIC CHIP	1000PF	5%	50V (TRV14E/TRV24E)
C467	1-164-357-11	CERAMIC CHIP	1000PF	5%	50V (TRV14E/TRV24E)
C468	1-162-970-11	CERAMIC CHIP	0.01uF	10%	25V
C469	1-162-970-11	CERAMIC CHIP	0.01uF	10%	25V
C470	1-107-823-11	CERAMIC CHIP	0.47uF	10%	16V
		< CONNECTOR >			
CN401	1-766-866-21	CONNECTOR, FFC/FPC 6P			
CN402	1-774-054-21	CONNECTOR, FFC/FPC (ZIF) 45P			
CN403	1-566-537-11	CONNECTOR, FPC (NON ZIF) 5P			(EXCEPT TRV53)
CN404	1-750-630-11	CONNECTOR, FFC/FPC (ZIF) 16P(TRV53)			
CN405	1-770-627-21	PIN, CONNECTOR 10P			
CN406	1-770-629-21	PIN, CONNECTOR 12P			
CN407	1-770-620-21	PIN, CONNECTOR 3P			
CN409	1-580-055-21	PIN, CONNECTOR 2P			
		< DIODE >			
D401	8-719-404-49	DIODE MA111			
D402	8-719-059-51	DIODE MA3J142E0LSO			
D403	8-719-404-49	DIODE MA111			
D404	8-719-404-49	DIODE MA111			
D405	8-719-059-57	DIODE MAZJ082DFLSO			
D406	8-719-420-14	DIODE MA8082-M			
D407	8-719-420-14	DIODE MA8082-M			
D408	8-719-404-49	DIODE MA111			
D410	8-719-404-49	DIODE MA111			
D411	8-719-420-14	DIODE MA8082-M			(EXCEPT TRV14E)
⚠D414	8-719-421-27	DIODE MA728			
D415	8-719-404-49	DIODE MA111			
D416	8-719-420-14	DIODE MA8082-M			
D418	8-719-059-57	DIODE MAZJ082DFLSO			
D419	8-719-404-49	DIODE MA111			
D420	8-719-059-57	DIODE MAZJ082DFLSO			
D421	8-719-404-49	DIODE MA111			
D422	8-719-404-49	DIODE MA111			
D424	8-719-059-57	DIODE MAZJ082DFLSO			
D425	8-719-420-14	DIODE MA8082-M			
D426	8-719-420-14	DIODE MA8082-M			
D427	8-719-059-57	DIODE MAZJ082DFLSO			
D428	8-719-059-57	DIODE MAZJ082DFLSO			(TRV34/TRV44/TRV52/TRV512/TRV44E)
D430	8-719-404-49	DIODE MA111			
D431	8-719-404-49	DIODE MA111			
		< IC >			
IC401	8-759-298-10	IC S-8423NFS-T2			
IC402	8-759-449-48	IC MB89098RPFV-G-152-BND			
IC403	8-759-059-05	IC TL1596CPW-ELM1000			
IC404	8-759-299-00	IC BA7785FS-E2			

Ref. No.	Part No.	Description			Remarks
		< JACK >			
J401	1-565-276-21	JACK, ULTRA SMALL 1P (LANC)			
J402	1-695-514-21	JACK (SMALL TYPE) 1P			(TRV34/TRV44/TRV52/TRV512/TRV44E)
J402	1-695-514-11	JACK (SMALL TYPE) 1P			(TRV32/TRV53/TRV312/TRV14E/TRV24E)
		< COIL >			
L401	1-414-754-11	INDUCTOR 10uH			
L402	1-414-757-11	INDUCTOR 100uH			
L403	1-414-754-11	INDUCTOR 10uH			
L404	1-414-757-11	INDUCTOR 100uH (TRV14E/TRV24E)			
L404	1-216-295-91	CONDUCTOR, CHIP (2012)			(EXCEPT TRV14E/TRV24E)
L405	1-216-295-91	CONDUCTOR, CHIP (2012)			(TRV34/TRV44/TRV52/TRV512/TRV44E)
L406	1-414-757-11	INDUCTOR 100uH (TRV14E/TRV24E)			
L406	1-216-295-91	CONDUCTOR, CHIP (2012)			(EXCEPT TRV14E/TRV24E)
		< IC LINK >			
PS401	1-576-122-21	LINK, IC			
		< TRANSISTOR >			
Q401	8-729-015-76	TRANSISTOR UN5211-TX			
Q402	8-729-030-54	TRANSISTOR MSB1218A-RT1 (TRV14E)			
Q402	8-729-230-60	TRANSISTOR 2SA1586-YG (TRV32/TRV312)			
Q402	8-729-420-24	TRANSISTOR 2SB1218A-QRS			(TRV32/TRV34/TRV44/TRV52/TRV53/TRV44E)
Q403	8-729-015-60	TRANSISTOR 2SJ316-TD			
Q404	8-729-015-76	TRANSISTOR UN5211-TX			
Q405	8-729-015-60	TRANSISTOR 2SJ316-TD			
Q406	8-729-015-76	TRANSISTOR UN5211-TX			
Q409	8-729-823-16	TRANSISTOR 2SC4555-5.6.7			
Q411	8-729-023-89	TRANSISTOR 2SJ305(TE85L)			
Q412	8-729-015-76	TRANSISTOR UN5211-TX			
		< RESISTOR >			
R401	1-216-864-11	METAL CHIP	0	5%	1/16W
R402	1-216-864-11	METAL CHIP	0	5%	1/16W
R403	1-216-833-11	METAL CHIP	10K	5%	1/16W (TRV32/TRV34/TRV44/TRV52/TRV53/TRV44E)
R404	1-216-864-11	METAL CHIP	0	5%	1/16W (TRV53)
R405	1-216-833-11	METAL CHIP	10K	5%	1/16W (TRV32/TRV34/TRV44/TRV52/TRV53/TRV44E)
R406	1-216-857-11	METAL CHIP	1M	5%	1/16W
R407	1-216-845-11	METAL CHIP	100K	5%	1/16W
R408	1-216-857-11	METAL CHIP	1M	5%	1/16W
R409	1-216-845-11	METAL CHIP	100K	5%	1/16W
R410	1-216-805-11	METAL CHIP	47	5%	1/16W
R411	1-216-853-11	METAL CHIP	470K	5%	1/16W
R412	1-216-864-11	METAL CHIP	0	5%	1/16W
R414	1-216-833-11	METAL CHIP	10K	5%	1/16W
R415	1-216-833-11	METAL CHIP	10K	5%	1/16W (EXCEPT TRV14E/TRV24E)
R418	1-216-853-11	METAL CHIP	470K	5%	1/16W
R421	1-216-825-11	METAL CHIP	2.2K	5%	1/16W
R422	1-216-857-11	METAL CHIP	1M	5%	1/16W
R424	1-216-864-11	METAL CHIP	0	5%	1/16W

Note :
The components identified by mark ⚠ or dotted line with mark ⚠ are critical for safety.
Replace only with part number specified.

Note :
Les composants identifiés par une marque ⚠ sont critiques pour la sécurité.
Ne les remplacer que par une pièce portant le numéro spécifié.

CF-45 **CF-46**

Ref. No.	Part No.	Description			Remarks
R425	1-216-827-11	METAL CHIP	3.3K	5%	1/16W (EXCEPT TRV14E)
R426	1-216-841-11	METAL CHIP	47K	5%	1/16W
R427	1-216-821-11	METAL CHIP	1K	5%	1/16W
R428	1-216-821-11	METAL CHIP	1K	5%	1/16W
R429	1-216-821-11	METAL CHIP	1K	5%	1/16W
R430	1-216-821-11	METAL CHIP	1K	5%	1/16W
R431	1-216-821-11	METAL CHIP	1K	5%	1/16W
R432	1-216-821-11	METAL CHIP	1K	5%	1/16W
R433	1-216-864-11	METAL CHIP	0	5%	1/16W
R434	1-216-821-11	METAL CHIP	1K	5%	1/16W
R435	1-216-821-11	METAL CHIP	1K	5%	1/16W
R437	1-216-823-11	METAL CHIP	1.5K	5%	1/16W
R438	1-216-822-11	METAL CHIP	1.2K	5%	1/16W
R439	1-216-853-11	METAL CHIP	470K	5%	1/16W
R440	1-216-821-11	METAL CHIP	1K	5%	1/16W (TRV14E/TRV24E)
R440	1-216-833-11	METAL CHIP	10K	5%	1/16W (EXCEPT TRV14E/TRV24E)
R441	1-216-833-11	METAL CHIP	10K	5%	1/16W
R442	1-216-864-11	METAL CHIP	0	5%	1/16W
R443	1-216-864-11	METAL CHIP	0	5%	1/16W
R444	1-216-864-11	METAL CHIP	0	5%	1/16W
R445	1-216-853-11	METAL CHIP	470K	5%	1/16W
R446	1-216-845-11	METAL CHIP	100K	5%	1/16W
R447	1-216-817-11	METAL CHIP	470	5%	1/16W
R448	1-216-831-11	METAL CHIP	6.8K	5%	1/16W
R449	1-216-827-11	METAL CHIP	3.3K	5%	1/16W
R450	1-216-823-11	METAL CHIP	1.5K	5%	1/16W
R451	1-216-822-11	METAL CHIP	1.2K	5%	1/16W
R452	1-216-857-11	METAL CHIP	1M	5%	1/16W
R453	1-216-853-11	METAL CHIP	470K	5%	1/16W
R454	1-216-851-11	METAL CHIP	330K	5%	1/16W
R455	1-216-849-11	METAL CHIP	220K	5%	1/16W
R456	1-218-911-11	METAL GLAZE	470K	0.50%	1/16W
R457	1-216-821-11	METAL CHIP	1K	5%	1/16W
R458	1-216-853-11	METAL CHIP	470K	5%	1/16W
R459	1-218-903-11	METAL GLAZE	220K	0.50%	1/16W
R460	1-216-821-11	METAL CHIP	1K	5%	1/16W
R461	1-216-821-11	METAL CHIP	1K	5%	1/16W
R462	1-216-853-11	METAL CHIP	470K	5%	1/16W
R463	1-216-821-11	METAL CHIP	1K	5%	1/16W
R464	1-216-853-11	METAL CHIP	470K	5%	1/16W
R465	1-216-821-11	METAL CHIP	1K	5%	1/16W
R466	1-216-853-11	METAL CHIP	470K	5%	1/16W
R467	1-216-821-11	METAL CHIP	1K	5%	1/16W
R468	1-216-821-11	METAL CHIP	1K	5%	1/16W
R469	1-216-853-11	METAL CHIP	470K	5%	1/16W
R470	1-216-853-11	METAL CHIP	470K	5%	1/16W
R471	1-216-853-11	METAL CHIP	470K	5%	1/16W
R472	1-216-853-11	METAL CHIP	470K	5%	1/16W
R473	1-216-853-11	METAL CHIP	470K	5%	1/16W
R474	1-216-853-11	METAL CHIP	470K	5%	1/16W
R476	1-216-833-11	METAL CHIP	10K	5%	1/16W
R477	1-216-833-11	METAL CHIP	10K	5%	1/16W
R478	1-216-833-11	METAL CHIP	10K	5%	1/16W
R479	1-216-833-11	METAL CHIP	10K	5%	1/16W
R480	1-216-845-11	METAL CHIP	100K	5%	1/16W
R481	1-216-821-11	METAL CHIP	1K	5%	1/16W
R482	1-216-845-11	METAL CHIP	100K	5%	1/16W
R483	1-216-821-11	METAL CHIP	1K	5%	1/16W
R485	1-216-821-11	METAL CHIP	1K	5%	1/16W
R486	1-216-821-11	METAL CHIP	1K	5%	1/16W
R487	1-216-821-11	METAL CHIP	1K	5%	1/16W
R488	1-216-821-11	METAL CHIP	1K	5%	1/16W
R489	1-216-821-11	METAL CHIP	1K	5%	1/16W
R490	1-216-821-11	METAL CHIP	1K	5%	1/16W
R491	1-216-821-11	METAL CHIP	1K	5%	1/16W
R492	1-216-821-11	METAL CHIP	1K	5%	1/16W
R493	1-216-821-11	METAL CHIP	1K	5%	1/16W
R494	1-216-821-11	METAL CHIP	1K	5%	1/16W
R495	1-216-821-11	METAL CHIP	1K	5%	1/16W
R496	1-216-821-11	METAL CHIP	1K	5%	1/16W
R497	1-216-833-11	METAL CHIP	10K	5%	1/16W
R498	1-216-821-11	METAL CHIP	1K	5%	1/16W
R499	1-216-821-11	METAL CHIP	1K	5%	1/16W
R500	1-216-822-11	METAL CHIP	1.2K	5%	1/16W
R501	1-216-823-11	METAL CHIP	1.5K	5%	1/16W
R502	1-216-831-11	METAL CHIP	6.8K	5%	1/16W
R503	1-216-845-11	METAL CHIP	100K	5%	1/16W
R504	1-216-845-11	METAL CHIP	100K	5%	1/16W
R505	1-216-809-11	METAL CHIP	100	5%	1/16W
R506	1-216-826-11	METAL CHIP	2.7K	5%	1/16W
R507	1-216-864-11	METAL CHIP	0	5%	1/16W
R508	1-216-864-11	METAL CHIP	0	5%	1/16W
R509	1-216-821-11	METAL CHIP	1K	5%	1/16W
R510	1-216-864-11	METAL CHIP	0	5%	1/16W
R511	1-216-864-11	METAL CHIP	0	5%	1/16W
R513	1-216-837-11	METAL CHIP	22K	5%	1/16W
R514	1-216-833-11	METAL CHIP	10K	5%	1/16W
R515	1-216-821-11	METAL CHIP	1K	5%	1/16W
R517	1-216-810-11	METAL CHIP	120	5%	1/16W
R518	1-216-845-11	METAL CHIP	100K	5%	1/16W
R519	1-216-853-11	METAL CHIP	470K	5%	1/16W
R520	1-216-826-11	METAL CHIP	2.7K	5%	1/16W
R521	1-216-821-11	METAL CHIP	1K	5%	1/16W
R522	1-216-810-11	METAL CHIP	120	5%	1/16W (TRV34/TRV44/TRV52/TRV512/TRV44E)
R523	1-216-864-11	METAL CHIP	0	5%	1/16W (TRV34/TRV44/TRV52/TRV53/TRV512/TRV44E)
R523	1-414-229-11	INDUCTOR, FERRITE BEAD			(TRV32/TRV312/TRV14E/TRV24E)
R524	1-216-853-11	METAL CHIP	470K	5%	1/16W
R526	1-216-864-11	METAL CHIP	0	5%	1/16W (TRV34/TRV44/TRV52/TRV53/TRV512/TRV44E)
R526	1-414-229-11	INDUCTOR, FERRITE BEAD			(TRV32/TRV312/TRV14E/TRV24E)
R527	1-216-864-11	METAL CHIP	0	5%	1/16W (TRV34/TRV44/TRV52/TRV53/TRV512/TRV44E)
R527	1-414-229-11	INDUCTOR, FERRITE BEAD			(TRV32/TRV312/TRV14E/TRV24E)
R528	1-216-864-11	METAL CHIP	0	5%	1/16W (TRV34/TRV44/TRV52/TRV53/TRV512/TRV44E)
R528	1-414-229-11	INDUCTOR, FERRITE BEAD			(TRV32/TRV312/TRV14E/TRV24E)
R530	1-216-821-11	METAL CHIP	1K	5%	1/16W

< SWITCH >

Ref. No.	Part No.	Description	Remarks
S401	1-771-025-21	SWITCH, ROTARY (ENCODER)	
S402	1-771-028-11	SWITCH, PUSH	
S403	1-762-650-21	SWITCH, SLIDE (STEADY SHOT)	(EXCEPT TRV14E)
S404	1-762-851-21	SWITCH, KEY BOARD (16:9 WIDE)	(EXCEPT TRV14E)
S405	1-762-851-21	SWITCH, KEY BOARD (COUNTER RESET)	
S406	1-762-851-21	SWITCH, KEY BOARD (TIME)	
S407	1-762-851-21	SWITCH, KEY BOARD (END SEARCH)	
S408	1-762-851-21	SWITCH, KEY BOARD (DISPLAY)	

Ref. No.	Part No.	Description	Remarks
S409	1-762-333-21	SWITCH, TACTILE (FADER)(TRV14E/TRV24E)	
S409	1-692-088-41	SWITCH, TACTILE (FADER)	
		(EXCEPT TRV14E/TRV24E)	
S410	1-762-333-21	SWITCH, TACTILE (BACK LIGHT)	
		(TRV14E/TRV24E)	
S410	1-692-088-41	SWITCH, TACTILE (BACK LIGHT)	
		(EXCEPT TRV14E/TRV24E)	
S411	1-762-851-21	SWITCH, KEY BOARD (DATE)	
S412	1-762-851-21	SWITCH, KEY BOARD (TITLE)	
S413	1-762-851-21	SWITCH, KEY BOARD (PICTURE EFFECT)	
S414	1-762-851-21	SWITCH, KEY BOARD (MENU)	
S415	1-762-648-21	SWITCH, SLIDE (START/STOP MODE)	
		< VIBRATOR >	
X401	1-579-463-11	VIBRATOR, CRYSTAL 32kHz	
X402	1-579-369-21	VIBRATOR 10MHz	

	A-7093-276-A	DD-94 BOARD, COMPLETE				
		**********				
		(TRV32/TRV34/TRV44/TRV52/TRV53/TRV312/TRV512)				
	A-7093-269-A	DD-94 BOARD, COMPLETE				
		**********				
		(TRV14E/TRV24E/TRV44E)				
		(Ref.No.1,000 Series)				
		< BATTERY >				
BH001	1-537-241-11	TERMINAL BOARD (BATTERY)				
		< CAPACITOR >				
C001	1-164-004-11	CERAMIC CHIP	0.1uF	10%	25V	
C002	1-164-004-11	CERAMIC CHIP	0.1uF	10%	25V	
C003	1-164-004-11	CERAMIC CHIP	0.1uF	10%	25V	
C004	1-162-957-11	CERAMIC CHIP	220PF	5%	50V	
C005	1-162-964-11	CERAMIC CHIP	0.001uF	10%	50V	
C006	1-162-965-11	CERAMIC CHIP	0.0015uF	10%	50V	
C007	1-164-227-11	CERAMIC CHIP	0.022uF	10%	25V	
C008	1-162-964-11	CERAMIC CHIP	0.001uF	10%	50V	
C009	1-164-677-11	CERAMIC CHIP	0.033uF	10%	16V	
C010	1-128-004-11	ELECT CHIP	10uF	20%	16V	
C011	1-126-395-11	ELECT	22uF	20%	16V	
C013	1-128-065-11	ELECT	68uF	20%	10V	
C014	1-162-968-11	CERAMIC CHIP	0.0047uF	10%	50V	
C016	1-162-964-11	CERAMIC CHIP	0.001uF	10%	50V	
C018	1-162-964-11	CERAMIC CHIP	0.001uF	10%	50V	
C019	1-162-964-11	CERAMIC CHIP	0.001uF	10%	50V	
C022	1-162-964-11	CERAMIC CHIP	0.001uF	10%	50V	
C024	1-162-964-11	CERAMIC CHIP	0.001uF	10%	50V	
C025	1-162-964-11	CERAMIC CHIP	0.001uF	10%	50V	
C026	1-162-915-11	CERAMIC CHIP	10PF	0.5PF	50V	
C027	1-162-915-11	CERAMIC CHIP	10PF	0.5PF	50V	
C028	1-115-566-11	CERAMIC CHIP	4.7uF	10%	10V	
C029	1-115-566-11	CERAMIC CHIP	4.7uF	10%	10V	
C031	1-115-566-11	CERAMIC CHIP	4.7uF	10%	10V	
C032	1-115-566-11	CERAMIC CHIP	4.7uF	10%	10V	
C033	1-115-566-11	CERAMIC CHIP	4.7uF	10%	10V	
C034	1-115-566-11	CERAMIC CHIP	4.7uF	10%	10V	
C035	1-107-682-11	CERAMIC CHIP	1uF	10%	16V	
C036	1-115-566-11	CERAMIC CHIP	4.7uF	10%	10V	
C037	1-107-682-11	CERAMIC CHIP	1uF	10%	16V	

Ref. No.	Part No.	Description			Remarks
C038	1-126-607-11	ELECT CHIP	47uF	20%	4V
C039	1-164-346-11	CERAMIC CHIP	1uF		16V
C040	1-164-346-11	CERAMIC CHIP	1uF		16V
C041	1-164-346-11	CERAMIC CHIP	1uF		16V
C042	1-124-778-00	ELECT CHIP	22uF	20%	6.3V
C043	1-107-682-11	CERAMIC CHIP	1uF	10%	16V
C044	1-164-346-11	CERAMIC CHIP	1uF		16V
C045	1-126-395-11	ELECT	22uF	20%	16V
C046	1-128-006-11	ELECT CHIP	4.7uF	20%	25V
		< CONNECTOR >			
* CN003	1-691-935-11	CONNECTOR, BOARD TO BOARD 38P			
CN005	1-770-620-21	PIN, CONNECTOR 3P			
		< DIODE >			
D001	8-719-989-33	DIODE FC806			
D002	8-719-420-14	DIODE MA8082-M			
		< FUSE >			
⚠F001	1-533-284-11	LINK, CHIP IC (TRV14E/TRV24E/TRV44E)			
⚠F001	1-533-483-11	FUSE (SMD) 1.6A/125V			
		(TRV32/TRV34/TRV44/TRV52/TRV53/TRV312/TRV512)			
⚠F003	1-533-284-11	LINK, CHIP IC (TRV14E/TRV24E/TRV44E)			
⚠F003	1-533-483-11	FUSE (SMD) 1.6A/125V			
		(TRV32/TRV34/TRV44/TRV52/TRV53/TRV312/TRV512)			
⚠F004	1-533-284-11	LINK, CHIP IC (TRV14E/TRV24E/TRV44E)			
⚠F004	1-533-483-11	FUSE (SMD) 1.6A/125V			
		(TRV32/TRV34/TRV44/TRV52/TRV53/TRV312/TRV512)			
		< IC >			
IC001	8-759-350-29	IC SN104213PM-T6			
		< COIL >			
L002	1-416-193-11	COIL, CHOKE 10uH			
L004	1-416-193-11	COIL, CHOKE 10uH			
L005	1-416-194-11	COIL, CHOKE 47uH			
L006	1-416-194-11	COIL, CHOKE 47uH			
L007	1-411-705-11	COIL, CHOKE 22uH			
L008	1-416-194-11	COIL, CHOKE 47uH			
L009	1-411-705-11	COIL, CHOKE 22uH			
L010	1-412-056-11	INDUCTOR CHIP 4.7uH			
L011	1-412-056-11	INDUCTOR CHIP 4.7uH			
L012	1-412-056-11	INDUCTOR CHIP 4.7uH			
L013	1-412-056-11	INDUCTOR CHIP 4.7uH			
L014	1-412-064-11	INDUCTOR CHIP 100uH			
L015	1-412-064-11	INDUCTOR CHIP 100uH			
L016	1-412-056-11	INDUCTOR CHIP 4.7uH			
L017	1-412-056-11	INDUCTOR CHIP 4.7uH			
L018	1-412-056-11	INDUCTOR CHIP 4.7uH			
		< TRANSISTOR >			
Q001	8-729-033-14	TRANSISTOR FP107-TL			
Q002	8-729-033-14	TRANSISTOR FP107-TL			
Q003	8-729-804-41	TRANSISTOR 2SB1122-S			
Q004	8-729-033-14	TRANSISTOR FP107-TL			
Q005	8-729-033-14	TRANSISTOR FP107-TL			

Note :
The components identified by mark ⚠ or dotted line with mark ⚠ are critical for safety.
Replace only with part number specified.

Note :
Les composants identifiés par une marque ⚠ sont critiques pour la sécurité.
Ne les remplacer que par une pièce portant le numéro spécifie.

DD-94 **FP-249** **FP-355** **IR-28**

Ref. No.	Part No.	Description			Remarks
Q006	8-729-033-14	TRANSISTOR FP107-TL			
Q007	8-729-030-75	TRANSISTOR 2SK2316-TD			
Q008	8-729-402-42	TRANSISTOR UN5213			
		< RESISTOR >			
R001	1-216-841-11	METAL CHIP	47K	5%	1/16W
R002	1-216-835-11	METAL CHIP	15K	5%	1/16W
R003	1-216-837-11	METAL CHIP	22K	5%	1/16W
R004	1-216-829-11	METAL CHIP	4.7K	5%	1/16W
R005	1-216-839-11	METAL CHIP	33K	5%	1/16W
R006	1-216-837-11	METAL CHIP	22K	5%	1/16W
R007	1-216-821-11	METAL CHIP	1K	5%	1/16W
R008	1-216-813-11	METAL CHIP	220	5%	1/16W
R009	1-216-841-11	METAL CHIP	47K	5%	1/16W
R010	1-216-845-11	METAL CHIP	100K	5%	1/16W
R013	1-216-864-11	METAL CHIP	0	5%	1/16W
R014	1-216-821-11	METAL CHIP	1K	5%	1/16W
R015	1-216-819-11	METAL CHIP	680	5%	1/16W
R016	1-216-864-11	METAL CHIP	0	5%	1/16W
R017	1-216-833-11	METAL CHIP	10K	5%	1/16W
R018	1-216-833-11	METAL CHIP	10K	5%	1/16W
R019	1-216-833-11	METAL CHIP	10K	5%	1/16W
R020	1-216-835-11	METAL CHIP	15K	5%	1/16W
R021	1-216-839-11	METAL CHIP	33K	5%	1/16W
R022	1-216-831-11	METAL CHIP	6.8K	5%	1/16W
R023	1-216-797-11	METAL CHIP	10	5%	1/16W
R024	1-216-837-11	METAL CHIP	22K	5%	1/16W
R025	1-216-841-11	METAL CHIP	47K	5%	1/16W
R027	1-216-833-11	METAL CHIP	10K	5%	1/16W
R032	1-216-864-11	METAL CHIP	0	5%	1/16W
R033	1-216-833-11	METAL CHIP	10K	5%	1/16W
R037	1-216-833-11	METAL CHIP	10K	5%	1/16W
R038	1-216-833-11	METAL CHIP	10K	5%	1/16W
R040	1-216-864-11	METAL CHIP	0	5%	1/16W
R041	1-216-864-11	METAL CHIP	0	5%	1/16W
R045	1-218-915-11	METAL GLAZE	680K	0.50%	1/16W
R046	1-216-864-11	METAL CHIP	0	5%	1/16W
		< SWITCH >			
S001	1-771-039-11	SWITCH, PUSH (START/STOP)			
S002	1-572-467-21	SWITCH, PUSH (1 KEY)(EJECT)			
S004	1-771-039-11	SWITCH, PUSH (STANDBY)			
		< TRANSFORMER >			
⚠T001	1-431-246-21	TRANSFORMER, DC/DC CONVERTER			
		FP-249 BOARD			
		**********			
					(Ref.No.5,000 Series)
	1-658-214-11	FP-356 FLEXIBLE BOARD			
	3-965-551-01	HOLDER (S), SENSOR			
	3-965-552-01	HOLDER (T), SENSOR			
		< HOLE ELEMENT >			
H001	8-719-033-37	ELEMENT, HALL HW-105C			
H002	8-719-033-37	ELEMENT, HALL HW-105C			

Ref. No.	Part No.	Description			Remarks
		< TRANSISTOR >			
Q001	8-729-907-25	TRANSISTOR PT4850F			
Q002	8-729-907-25	TRANSISTOR PT4850F			
		< SWITCH >			
S001	1-692-614-11	SWITCH, PUSH (3 KEY)			
S002	1-572-688-11	SWITCH, PUSH (1 KEY) (C.C.LOCK)			
		FP-355 BOARD			
		**********			
					(Ref.No.5,000 Series)
	1-658-213-11	FP-355 FLEXIBLE BOARD			
		< DIODE >			
D001	8-719-988-42	DIODE GL453S			
	A-7073-091-A	IR-28 BOARD, COMPLETE (TRV53)			
		**********			
					(Ref.No.1,000 Series)
		< CAPACITOR >			
C001	1-109-982-11	CERAMIC CHIP	1uF	10%	10V
C002	1-109-982-11	CERAMIC CHIP	1uF	10%	10V
C003	1-107-826-11	CERAMIC CHIP	0.1uF	10%	16V
C004	1-162-970-11	CERAMIC CHIP	0.01uF	10%	25V
C005	1-162-970-11	CERAMIC CHIP	0.01uF	10%	25V
C006	1-107-823-11	CERAMIC CHIP	0.47uF	10%	16V
C008	1-162-921-11	CERAMIC CHIP	33PF	5%	50V
C009	1-162-922-11	CERAMIC CHIP	39PF	5%	50V
C010	1-162-909-11	CERAMIC CHIP	4PF	0.25PF	50V
C011	1-164-668-11	CERAMIC CHIP	510PF	5%	50V
C012	1-135-259-11	TANTAL. CHIP	10uF	20%	6.3V
C013	1-135-259-11	TANTAL. CHIP	10uF	20%	6.3V
C014	1-162-970-11	CERAMIC CHIP	0.01uF	10%	25V
C015	1-135-201-11	TANTALUM CHIP	10uF	20%	4V
C017	1-135-145-11	TANTALUM CHIP	0.47uF	10%	35V
C018	1-113-987-11	TANTAL. CHIP	4.7uF	20%	25V
C019	1-107-823-11	CERAMIC CHIP	0.47uF	10%	16V
C020	1-107-823-11	CERAMIC CHIP	0.47uF	10%	16V
C022	1-162-970-11	CERAMIC CHIP	0.01uF	10%	25V
C023	1-135-259-11	TANTAL. CHIP	10uF	20%	6.3V
C024	1-162-970-11	CERAMIC CHIP	0.01uF	10%	25V
C025	1-162-970-11	CERAMIC CHIP	0.01uF	10%	25V
C026	1-162-970-11	CERAMIC CHIP	0.01uF	10%	25V
C029	1-162-970-11	CERAMIC CHIP	0.01uF	10%	25V
C030	1-107-826-11	CERAMIC CHIP	0.1uF	10%	16V
C031	1-135-145-11	TANTALUM CHIP	0.47uF	10%	35V
C033	1-135-259-11	TANTAL. CHIP	10uF	20%	6.3V
C036	1-104-852-11	TANTAL. CHIP	22uF	20%	6.3V
C037	1-107-826-11	CERAMIC CHIP	0.1uF	10%	16V
C038	1-107-826-11	CERAMIC CHIP	0.1uF	10%	16V
C039	1-135-181-21	TANTALUM CHIP	4.7uF	20%	6.3V
		< CONNECTOR >			
* CN001	1-691-922-11	CONNECTOR, BOARD TO BOARD 14P			

Ref. No.	Part No.	Description			Remarks
		< IC >			
IC001	8-759-455-09	IC LA9510W-TBM			
		< COIL >			
L002	1-412-948-11	INDUCTOR 5.6uH			
L003	1-414-754-11	INDUCTOR 10uH			
L004	1-412-957-11	INDUCTOR 33uH			
L005	1-412-957-11	INDUCTOR 33uH			
		< TRANSISTOR >			
Q006	8-729-122-63	TRANSISTOR 2SA1226			
Q007	8-729-420-24	TRANSISTOR 2SB1218A-QRS			
		< RESISTOR >			
R002	1-218-879-11	METAL GLAZE	22K	0.50%	1/16W
R004	1-216-831-11	METAL CHIP	6.8K	5%	1/16W
R005	1-216-818-11	METAL CHIP	560	5%	1/16W
R006	1-216-817-11	METAL CHIP	470	5%	1/16W
R007	1-216-817-11	METAL CHIP	470	5%	1/16W
R008	1-216-041-00	METAL CHIP	470	5%	1/10W
R009	1-216-864-11	METAL CHIP	0	5%	1/16W
R013	1-216-864-11	METAL CHIP	0	5%	1/16W
R015	1-216-817-11	METAL CHIP	470	5%	1/16W
R016	1-216-821-11	METAL CHIP	1K	5%	1/16W
R017	1-216-815-11	METAL CHIP	330	5%	1/16W
R019	1-216-864-11	METAL CHIP	0	5%	1/16W
R020	1-216-833-11	METAL CHIP	10K	5%	1/16W
R021	1-216-841-11	METAL CHIP	47K	5%	1/16W
R022	1-216-833-11	METAL CHIP	10K	5%	1/16W
R023	1-216-841-11	METAL CHIP	47K	5%	1/16W
R024	1-216-853-11	METAL CHIP	470K	5%	1/16W
R033	1-216-837-11	METAL CHIP	22K	5%	1/16W
R034	1-216-829-11	METAL CHIP	4.7K	5%	1/16W
R035	1-216-829-11	METAL CHIP	4.7K	5%	1/16W
R036	1-216-823-11	METAL CHIP	1.5K	5%	1/16W
R039	1-216-832-11	METAL CHIP	8.2K	5%	1/16W
R041	1-216-833-11	METAL CHIP	10K	5%	1/16W
R043	1-216-847-11	METAL CHIP	150K	5%	1/16W
R044	1-216-847-11	METAL CHIP	150K	5%	1/16W
R046	1-216-864-11	METAL CHIP	0	5%	1/16W
	A-7073-058-A	JK-154 BOARD, COMPLETE (TRV14E/TRV24E)			
		**********			
	A-7073-162-A	JK-155 BOARD, COMPLETE			
		**********			
		(TRV34/TRV44/TRV52/TRV44E)			
	A-7073-134-A	JK-155 BOARD, COMPLETE			
		**********			
		(TRV32/TRV53/TRV312/TRV512)			
		(Ref.No.2,000 Series)			
		< CAPACITOR >			
C061	1-162-964-11	CERAMIC CHIP	0.001uF	10%	50V
		(TRV14E/TRV24E)			
C062	1-162-964-11	CERAMIC CHIP	0.001uF	10%	50V
		(TRV14E/TRV24E)			
C065	1-162-964-11	CERAMIC CHIP	0.001uF	10%	50V
		< CONNECTOR >			
CN060	1-764-680-21	CONNECTOR, FFC/FPC (ZIF) 8P			

Ref. No.	Part No.	Description			Remarks
		< DIODE >			
D063	8-719-059-57	DIODE MAZJ082DFLSO			
D069	8-719-059-57	DIODE MAZJ082DFLSO			
D070	8-719-061-82	DIODE TLSU1002(TPX1,SONY)			
		< FERRITE BEAD >			
FB061	1-414-228-11	INDUCTOR, FERRITE BEAD			
		(TRV34/TRV44/TRV52/TRV44E)			
FB061	1-414-229-11	INDUCTOR, FERRITE BEAD			
		(TRV32/TRV53/TRV312/TRV512/TRV14E/TRV24E)			
		< JACK >			
J060	1-537-726-11	TERMINAL BOARD (VIDEO/AUDIO OUT)			
		< COIL >			
L061	1-216-295-91	CONDUCTOR, CHIP (2012)			
L062	1-216-295-91	CONDUCTOR, CHIP (2012)			
		(TRV34/TRV44/TRV52/TRV44E)			
		< RESISTOR >			
R062	1-216-821-11	METAL CHIP	1K	5%	1/16W
				(TRV14E/TRV24E)	
R062	1-216-817-11	METAL CHIP	470	5%	1/16W
				(EXCEPT TRV14E/TRV24E)	
R065	1-216-864-11	METAL CHIP	0	5%	1/16W
	A-7073-086-A	LB-49 BOARD, COMPLETE (TRV53)			
		**********			
		(Ref.No.7,000 Series)			
		< CAPACITOR >			
C801	1-104-917-11	TANTAL. CHIP	15uF	20%	20V
C802	1-115-566-11	CERAMIC CHIP	4.7uF	10%	10V
C803	1-162-970-11	CERAMIC CHIP	0.01uF	10%	25V
C804	1-163-020-00	CERAMIC CHIP	0.0082uF	10%	50V
C805	1-163-020-00	CERAMIC CHIP	0.0082uF	10%	50V
C806	1-163-020-00	CERAMIC CHIP	0.0082uF	10%	50V
		< CONNECTOR >			
CN801	1-779-383-11	CONNECTOR, BOARD TO BOARD 10P			
		< DIODE >			
D802	8-719-056-49	DIODE 1SS370(TE85L)			
		< COIL >			
L801	1-412-033-11	INDUCTOR CHIP 220uH			
L802	1-412-029-11	INDUCTOR CHIP 10uH			
		< FLUORECENT INDICATOR >			
⚠ND801	1-517-325-11	LANP, FLUORESCENT (0.55 INCH)			
		< TRANSISTOR >			
Q801	8-729-024-60	TRANSISTOR MTD6N15T4			
		< RESISTOR >			
R801	1-216-809-11	METAL CHIP	100	5%	1/16W
R802	1-216-839-11	METAL CHIP	33K	5%	1/16W

Ref. No.	Part No.	Description	Remarks
		< TRANSFORMER >	
⚠T801	1-429-756-21	TRANSFORMER, INVERTER	
	A-7073-050-A	MA-296 BOARD, COMPLETE (TRV14E/TRV24E) **********	
	A-7073-165-A	MA-297 BOARD, COMPLETE **********	(TRV34/TRV44/TRV44E)
	A-7073-138-A	MA-297 BOARD, COMPLETE (TRV32/TRV312) **********	
	A-7073-192-A	MA-297 BOARD, COMPLETE (TRV52/TRV512) **********	
	A-7073-190-A	MA-297 BOARD, COMPLETE (TRV53) **********	
			(Ref.No.2,000 Series)
		< CAPACITOR >	
C953	1-162-967-11	CERAMIC CHIP 0.0033uF 10% 50V	(TRV34/TRV44/TRV52/TRV512/TRV44E)
C954	1-162-927-11	CERAMIC CHIP 100PF 5% 50V	(TRV34/TRV44/TRV52/TRV512/TRV44E)
C955	1-164-227-11	CERAMIC CHIP 0.022uF 10% 25V	(TRV34/TRV44/TRV52/TRV512/TRV24E/TRV44E)
C956	1-115-156-11	CERAMIC CHIP 1uF 10V	(TRV52/TRV53/TRV512)
C957	1-164-156-11	CERAMIC CHIP 0.1uF 25V	(TRV34/TRV44/TRV52/TRV512/TRV44E)
C958	1-165-176-11	CERAMIC CHIP 0.047uF 10% 16V	(TRV34/TRV44/TRV52/TRV512/TRV44E)
C959	1-107-826-11	CERAMIC CHIP 0.1uF 10% 16V	(TRV34/TRV44/TRV52/TRV512/TRV44E)
C960	1-109-982-11	CERAMIC CHIP 1uF 10% 10V	(TRV34/TRV44/TRV52/TRV512/TRV44E)
C961	1-107-826-11	CERAMIC CHIP 0.1uF 10% 16V	(TRV34/TRV44/TRV52/TRV512/TRV44E)
C962	1-107-826-11	CERAMIC CHIP 0.1uF 10% 16V	(TRV34/TRV44/TRV52/TRV512/TRV24E/TRV44E)
C963	1-162-927-11	CERAMIC CHIP 100PF 5% 50V	(TRV34/TRV44/TRV52/TRV512/TRV44E)
C964	1-162-927-11	CERAMIC CHIP 100PF 5% 50V	
C966	1-107-826-11	CERAMIC CHIP 0.1uF 10% 16V	(EXCEPT TRV14E/TRV24E)
C967	1-107-686-11	TANTAL. CHIP 4.7uF 20% 16V	(EXCEPT TRV14E/TRV24E)
C969	1-107-826-11	CERAMIC CHIP 0.1uF 10% 16V	(TRV34/TRV44/TRV52/TRV512/TRV44E)
C970	1-107-826-11	CERAMIC CHIP 0.1uF 10% 16V	(TRV34/TRV44/TRV52/TRV512/TRV44E)
C972	1-107-826-11	CERAMIC CHIP 0.1uF 10% 16V	(TRV34/TRV44/TRV52/TRV512/TRV44E)
C973	1-109-982-11	CERAMIC CHIP 1uF 10% 10V	(TRV34/TRV44/TRV52/TRV512/TRV44E)
C974	1-165-176-11	CERAMIC CHIP 0.047uF 10% 16V	(TRV34/TRV44/TRV52/TRV512/TRV44E)
C975	1-164-227-11	CERAMIC CHIP 0.022uF 10% 25V	(TRV34/TRV44/TRV52/TRV512/TRV44E)
C977	1-162-967-11	CERAMIC CHIP 0.0033uF 10% 50V	(TRV34/TRV44/TRV52/TRV512/TRV44E)
C978	1-162-927-11	CERAMIC CHIP 100PF 5% 50V	
C980	1-107-826-11	CERAMIC CHIP 0.1uF 10% 16V	(TRV32/TRV53/TRV312/TRV14E/TRV24E)
C982	1-165-128-11	CERAMIC CHIP 0.22uF 16V	(TRV32/TRV53/TRV312/TRV14E/TRV24E)
C983	1-162-927-11	CERAMIC CHIP 100PF 5% 50V	(TRV32/TRV53/TRV312/TRV14E/TRV24E)
C984	1-162-970-11	CERAMIC CHIP 0.01uF 10% 25V	(TRV32/TRV53/TRV312/TRV14E/TRV24E)
C985	1-107-826-11	CERAMIC CHIP 0.1uF 10% 16V	(TRV32/TRV53/TRV312/TRV14E/TRV24E)
C986	1-107-826-11	CERAMIC CHIP 0.1uF 10% 16V	(TRV32/TRV53/TRV312/TRV14E/TRV24E)
C988	1-164-346-11	CERAMIC CHIP 1uF 16V	(TRV32/TRV53/TRV312/TRV14E/TRV24E)
C990	1-124-779-00	ELECT CHIP 10uF 20% 16V	(TRV34/TRV44/TRV52/TRV512/TRV44E)
C990	1-126-607-11	ELECT CHIP 47uF 20% 4V	(TRV32/TRV53/TRV312/TRV14E/TRV24E)
C991	1-164-227-11	CERAMIC CHIP 0.022uF 10% 25V	(TRV53)
C991	1-165-176-11	CERAMIC CHIP 0.047uF 10% 16V	(TRV32/TRV312/TRV14E/TRV24E)
C993	1-124-779-00	ELECT CHIP 10uF 20% 16V	
C995	1-165-176-11	CERAMIC CHIP 0.047uF 10% 16V	(TRV34/TRV44/TRV52/TRV512/TRV44E)
C996	1-165-176-11	CERAMIC CHIP 0.047uF 10% 16V	(TRV34/TRV44/TRV52/TRV512/TRV44E)
C998	1-165-176-11	CERAMIC CHIP 0.047uF 10% 16V	(TRV34/TRV44/TRV52/TRV512/TRV44E)
C999	1-165-176-11	CERAMIC CHIP 0.047uF 10% 16V	(TRV34/TRV44/TRV52/TRV512/TRV44E)
		< CONNECTOR >	
CN951	1-750-076-21	CONNECTOR, FFC/FPC 12P	
CN952	1-580-055-21	PIN, CONNECTOR 2P	(TRV34/TRV44/TRV52/TRV512/TRV44E)
CN953	1-580-055-21	PIN, CONNECTOR 2P	
		< DIODE >	
D952	8-719-059-51	DIODE MA3J142E0LSO	
D956	8-749-060-65	DIODE DCC3810 (TRV52/TRV53/TRV512)	
		< IC >	
IC951	8-759-380-80	IC LA7473V-TLM	(TRV34/TRV44/TRV52/TRV512/TRV44E)
IC952	8-759-339-63	IC NJM2118V-TE2	(TRV32/TRV53/TRV312/TRV14E/TRV24E)
IC953	8-749-013-49	IC PNA4613M00XD	(TRV32/TRV312/TRV14E/TRV24E)
		< JACK >	
J951	1-691-737-11	JACK, SMALL TYPE (MIC)(TRV52/TRV512)	
J951	1-568-027-11	JACK, SMALL TYPE (MIC)	(EXCEPT TRV52/TRV512)
		< TRANSISTOR >	
Q951	8-729-030-54	TRANSISTOR MSB1218A-RT1	(TRV14E/TRV24E)
Q951	8-729-230-60	TRANSISTOR 2SA1586-YG	(TRV32/TRV312)
Q951	8-729-420-24	TRANSISTOR 2SB1218A-QRS	(TRV32/TRV53/TRV312/TRV14E/TRV24E)
Q954	8-729-140-75	TRANSISTOR 2SD999-CLCK	
		< RESISTOR >	
R953	1-216-864-11	METAL CHIP 0 5% 1/16W	
R954	1-216-823-11	METAL CHIP 1.5K 5% 1/16W	(TRV34/TRV44/TRV52/TRV512/TRV44E)
R955	1-216-864-11	METAL CHIP 0 5% 1/16W	
R956	1-216-864-11	METAL CHIP 0 5% 1/16W	

Note :
The components identified by mark ⚠ or dotted line with mark ⚠ are critical for safety.
Replace only with part number specified.

Note :
Les composants identifiés par une marque ⚠ sont critiques pour la sécurité.
Ne les remplacer que par une pièce portant le numéro spécifie.

Ref. No.	Part No.	Description	Remarks
R957	1-216-829-11	METAL CHIP 4.7K 5% 1/16W	(TRV34/TRV44/TRV52/TRV512/TRV44E)
R958	1-216-838-11	METAL CHIP 27K 5% 1/16W	(TRV34/TRV44/TRV52/TRV512/TRV44E)
R959	1-216-833-11	METAL CHIP 10K 5% 1/16W	(TRV34/TRV44/TRV52/TRV512/TRV44E)
R960	1-216-311-00	METAL CHIP 6.8 5% 1/10W	(TRV52/TRV53/TRV512)
R961	1-216-825-11	METAL CHIP 2.2K 5% 1/16W	(TRV34/TRV44/TRV52/TRV512/TRV44E)
R962	1-216-839-11	METAL CHIP 33K 5% 1/16W	(TRV34/TRV44/TRV52/TRV512/TRV44E)
R963	1-216-831-11	METAL CHIP 6.8K 5% 1/16W	(TRV34/TRV44/TRV52/TRV512/TRV44E)
R964	1-216-831-11	METAL CHIP 6.8K 5% 1/16W	(TRV34/TRV44/TRV52/TRV512/TRV44E)
R965	1-216-839-11	METAL CHIP 33K 5% 1/16W	(TRV34/TRV44/TRV52/TRV512/TRV44E)
R966	1-216-302-00	METAL CHIP 2.7 5% 1/10W	(TRV52/TRV53/TRV512)
R967	1-216-833-11	METAL CHIP 10K 5% 1/16W	(TRV34/TRV44/TRV52/TRV512/TRV44E)
R968	1-216-829-11	METAL CHIP 4.7K 5% 1/16W	(TRV34/TRV44/TRV52/TRV512/TRV44E)
R969	1-216-838-11	METAL CHIP 27K 5% 1/16W	(TRV34/TRV44/TRV52/TRV512/TRV44E)
R970	1-216-825-11	METAL CHIP 2.2K 5% 1/16W	(TRV34/TRV44/TRV52/TRV512/TRV44E)
R973	1-216-823-11	METAL CHIP 1.5K 5% 1/16W	(TRV34/TRV44/TRV52/TRV512/TRV44E)
R975	1-216-831-11	METAL CHIP 6.8K 5% 1/16W	(TRV34/TRV44/TRV52/TRV512/TRV44E)
R976	1-216-831-11	METAL CHIP 6.8K 5% 1/16W	(TRV34/TRV44/TRV52/TRV512/TRV44E)
R978	1-216-823-11	METAL CHIP 1.5K 5% 1/16W	(TRV32/TRV53/TRV312/TRV14E/TRV24E)
R979	1-216-819-11	METAL CHIP 680 5% 1/16W	(TRV53)
R979	1-216-818-11	METAL CHIP 560 5% 1/16W	(TRV32/TRV312/TRV14E/TRV24E)
R980	1-216-830-11	METAL CHIP 5.6K 5% 1/16W	(TRV32/TRV53/TRV312/TRV14E/TRV24E)
R981	1-216-838-11	METAL CHIP 27K 5% 1/16W	(TRV32/TRV53/TRV312/TRV14E/TRV24E)
R982	1-216-831-11	METAL CHIP 6.8K 5% 1/16W	(TRV32/TRV53/TRV312/TRV14E/TRV24E)
R983	1-216-838-11	METAL CHIP 27K 5% 1/16W	(TRV32/TRV53/TRV312/TRV14E/TRV24E)
R986	1-216-864-11	METAL CHIP 0 5% 1/16W	(TRV34/TRV44/TRV52/TRV512/TRV44E)
R989	1-216-824-11	METAL CHIP 1.8K 5% 1/16W	(TRV34/TRV44/TRV52/TRV512/TRV44E)
R990	1-216-829-11	METAL CHIP 4.7K 5% 1/16W	(TRV34/TRV44/TRV52/TRV512/TRV44E)
R991	1-216-829-11	METAL CHIP 4.7K 5% 1/16W	(TRV34/TRV44/TRV52/TRV512/TRV44E)
R992	1-216-838-11	METAL CHIP 27K 5% /16W	(TRV34/TRV44/TRV52/TRV512/TRV44E)
R993	1-216-838-11	METAL CHIP 27K 5% 1/16W	(TRV34/TRV44/TRV52/TRV512/TRV44E)
R995	1-216-864-11	METAL CHIP 0 5% 1/16W	(TRV34/TRV44/TRV52/TRV512/TRV44E)
R996	1-216-864-11	METAL CHIP 0 5% 1/16W	(TRV34/TRV44/TRV52/TRV512/TRV44E)
R997	1-216-809-11	METAL CHIP 100 5% 1/16W	(TRV32/TRV53/TRV312/TRV14E/TRV24E)

Ref. No.	Part No.	Description	Remarks
		< SWITCH >	
S951	1-771-039-11	SWITCH, PUSH (CAMERA)(TRV14E/TRV24E)	
S951	1-771-040-21	SWITCH, PUSH (CAMERA)(TRV32/TRV312)	
S952	1-771-040-21	SWITCH, PUSH (PLAYER)(TRV14E/TRV24E)	
S952	1-771-039-11	SWITCH, PUSH (PLAYER)(TRV32/TRV312)	
	A-7093-273-A	PD-74 BOARD, COMPLETE (TRV24E) **********	
			(Ref.No.8,000 Series)
		< CAPACITOR >	
C901	1-104-913-11	TANTAL. CHIP 10uF 20% 16V	
C902	1-162-970-11	CERAMIC CHIP 0.01uF 10% 25V	
C903	1-162-970-11	CERAMIC CHIP 0.01uF 10% 25V	
C904	1-135-259-11	TANTAL. CHIP 10uF 20% 6.3V	
C905	1-162-970-11	CERAMIC CHIP 0.01uF 10% 25V	
C906	1-107-686-11	TANTAL. CHIP 4.7uF 20% 16V	
C909	1-162-923-11	CERAMIC CHIP 47PF 5% 50V	
C910	1-164-816-11	CERAMIC CHIP 220PF 2% 50V	
C911	1-107-826-11	CERAMIC CHIP 0.1uF 10% 16V	
C912	1-162-964-11	CERAMIC CHIP 0.001uF 10% 50V	
C913	1-162-928-11	CERAMIC CHIP 120PF 5% 50V	
C915	1-162-970-11	CERAMIC CHIP 0.01uF 10% 25V	
C918	1-165-319-11	CERAMIC CHIP 0.1uF 50V	
C919	1-164-360-11	CERAMIC CHIP 0.1uF 16V	
C920	1-164-360-11	CERAMIC CHIP 0.1uF 16V	
C921	1-164-360-11	CERAMIC CHIP 0.1uF 16V	
C922	1-164-505-11	CERAMIC CHIP 2.2uF 16V	
C923	1-162-970-11	CERAMIC CHIP 0.01uF 10% 25V	
C924	1-162-970-11	CERAMIC CHIP 0.01uF 10% 25V	
C925	1-135-213-21	TANTAL. CHIP 3.3uF 20% 25V	
C951	1-115-566-11	CERAMIC CHIP 4.7uF 10% 10V	
C952	1-164-218-11	CERAMIC CHIP 180PF 0.25PF 50V	
C953	1-164-360-11	CERAMIC CHIP 0.1uF 16V	
C954	1-107-826-11	CERAMIC CHIP 0.1uF 10% 16V	
C955	1-164-360-11	CERAMIC CHIP 0.1uF 16V	
C956	1-162-966-11	CERAMIC CHIP 0.0022uF 10% 50V	
C957	1-164-227-11	CERAMIC CHIP 0.022uF 10% 25V	
C958	1-162-962-11	CERAMIC CHIP 470PF 10% 50V	
C959	1-115-566-11	CERAMIC CHIP 4.7uF 10% 10V	
C960	1-115-566-11	CERAMIC CHIP 4.7uF 10% 10V	
C961	1-162-962-11	CERAMIC CHIP 470PF 10% 50V	
C962	1-164-004-11	CERAMIC CHIP 0.1uF 10% 25V	
C963	1-164-489-11	CERAMIC CHIP 0.22uF 10% 16V	
C964	1-162-962-11	CERAMIC CHIP 470PF 10% 50V	
C965	1-162-964-11	CERAMIC CHIP 0.001uF 10% 50V	
C966	1-164-346-11	CERAMIC CHIP 1uF 16V	
C967	1-104-911-11	TANTAL. CHIP 33uF 20% 10V	
C968	1-164-664-11	CERAMIC CHIP 0.033uF 10% 50V	
C969	1-164-505-11	CERAMIC CHIP 2.2uF 16V	
C970	1-164-505-11	CERAMIC CHIP 2.2uF 16V	
C972	1-164-505-11	CERAMIC CHIP 2.2uF 16V	
C973	1-164-505-11	CERAMIC CHIP 2.2uF 16V	
C974	1-164-505-11	CERAMIC CHIP 2.2uF 16V	
C975	1-164-505-11	CERAMIC CHIP 2.2uF 16V	
C976	1-164-004-11	CERAMIC CHIP 0.1uF 10% 25V	

PD-74

Ref. No.	Part No.	Description			Remarks
⚠C977	1-113-521-11	CERAMIC CHIP	12PF	10%	3KV
C978	1-164-360-11	CERAMIC CHIP	0.1uF		16V
		< CONNECTOR >			
CN802	1-770-629-21	PIN, CONNECTOR 12P			
CN803	1-691-386-11	CONNECTOR, FFC/FPC 22P			
CN804	1-764-708-21	CONNECTOR, FFC/FPC (LIF) 9P			
CN807	1-766-346-21	CONNECTOR, FFC/FPC 16P			
CN951	1-764-709-11	CONNECTOR, FFC/FPC (LIF) 10P			
		< DIODE >			
D801	8-713-102-80	DIODE 1T369-01-T8A			
D802	8-719-420-51	DIODE MA729			
D901	8-719-404-49	DIODE MA111			
D903	8-713-102-80	DIODE 1T369-01-T8A			
D904	8-719-421-27	DIODE MA728			
D905	8-719-061-82	DIODE TLSU1002(TPX1,SONY)			
D951	8-719-989-33	DIODE FC806			
D952	8-719-941-86	DIODE DAN202U			
D953	8-719-404-49	DIODE MA111			
D954	8-719-058-86	DIODE PG1101H-TR			
D955	8-719-404-49	DIODE MA111			
		< IC >			
IC901	8-759-368-60	IC CM7012L3-T4			
IC902	8-759-359-49	IC NJM3414AV(TE2)			
IC951	8-759-060-94	IC MB3785APFV-G-BND-ER			
		< COIL >			
L901	1-414-754-11	INDUCTOR 10uH			
L902	1-414-753-91	INDUCTOR 4.7uH			
L903	1-412-954-11	INDUCTOR 18uH			
L905	1-414-754-11	INDUCTOR 10uH			
L951	1-412-056-11	INDUCTOR CHIP 4.7uH			
L952	1-412-058-11	INDUCTOR CHIP 10uH			
L953	1-424-674-11	COIL, CHOKE 22uH			
L954	1-409-536-41	COIL, CHOKE 150uH			
L955	1-414-757-11	INDUCTOR 100uH			
L956	1-414-757-11	INDUCTOR 100uH			
L957	1-414-757-11	INDUCTOR 100uH			
		< TRANSISTOR >			
Q901	8-729-402-42	TRANSISTOR UN5213			
Q906	8-729-420-24	TRANSISTOR 2SB1218A-QRS			
Q952	8-729-402-42	TRANSISTOR UN5213			
Q955	8-729-823-84	TRANSISTOR FP102			
Q956	8-729-804-41	TRANSISTOR 2SB1122-S			
Q957	8-729-039-43	TRANSISTOR FP216-TL			
Q958	8-729-420-24	TRANSISTOR 2SB1218A-QRS			
		< RESISTOR >			
R901	1-216-843-11	METAL CHIP	68K	5%	1/16W
R902	1-216-843-11	METAL CHIP	68K	5%	1/16W
R903	1-216-841-11	METAL CHIP	47K	5%	1/16W
R904	1-216-841-11	METAL CHIP	47K	5%	1/16W
R905	1-216-839-11	METAL CHIP	33K	5%	1/16W
R906	1-216-829-11	METAL CHIP	4.7K	5%	1/16W
R907	1-216-840-11	METAL CHIP	39K	5%	1/16W
R908	1-216-821-11	METAL CHIP	1K	5%	1/16W
R909	1-216-827-11	METAL CHIP	3.3K	5%	1/16W
R911	1-216-829-11	METAL CHIP	4.7K	5%	1/16W

Ref. No.	Part No.	Description			Remarks
R913	1-218-891-11	METAL GLAZE	68K	0.50%	1/16W
R914	1-216-843-11	METAL CHIP	68K	5%	1/16W
R915	1-216-845-11	METAL CHIP	100K	5%	1/16W
R916	1-216-829-11	METAL CHIP	4.7K	5%	1/16W
R917	1-216-841-11	METAL CHIP	47K	5%	1/16W
R918	1-216-838-11	METAL CHIP	27K	5%	1/16W
R920	1-216-857-11	METAL CHIP	1M	5%	1/16W
R921	1-216-837-11	METAL CHIP	22K	5%	1/16W
R922	1-216-833-11	METAL CHIP	10K	5%	1/16W
R923	1-216-837-11	METAL CHIP	22K	5%	1/16W
R927	1-216-845-11	METAL CHIP	100K	5%	1/16W
R928	1-216-830-11	METAL CHIP	5.6K	5%	1/16W
R931	1-216-839-11	METAL CHIP	33K	5%	1/16W
R932	1-216-839-11	METAL CHIP	33K	5%	1/16W
R933	1-216-840-11	METAL CHIP	39K	5%	1/16W
R934	1-216-845-11	METAL CHIP	100K	5%	1/16W
R936	1-216-842-11	METAL CHIP	56K	5%	1/16W
R940	1-216-833-11	METAL CHIP	10K	5%	1/16W
R945	1-216-841-11	METAL CHIP	47K	5%	1/16W
R947	1-216-817-11	METAL CHIP	470	5%	1/16W
R949	1-216-833-11	METAL CHIP	10K	5%	1/16W
R951	1-216-833-11	METAL CHIP	10K	5%	1/16W
R952	1-216-840-11	METAL CHIP	39K	5%	1/16W
R953	1-216-833-11	METAL CHIP	10K	5%	1/16W
R954	1-218-895-11	METAL GLAZE	100K	0.50%	1/16W
R955	1-218-885-11	METAL GLAZE	39K	0.50%	1/16W
R957	1-218-883-11	METAL GLAZE	33K	0.50%	1/16W
R959	1-218-871-11	METAL GLAZE	10K	0.50%	1/16W
R960	1-218-885-11	METAL GLAZE	39K	0.50%	1/16W
R961	1-216-864-11	METAL CHIP	0	5%	1/16W
R962	1-218-879-11	METAL GLAZE	22K	0.50%	1/16W
R963	1-218-871-11	METAL GLAZE	10K	0.50%	1/16W
R964	1-218-871-11	METAL GLAZE	10K	0.50%	1/16W
R965	1-218-883-11	METAL GLAZE	33K	0.50%	1/16W
R966	1-216-825-11	METAL CHIP	2.2K	5%	1/16W
R967	1-216-821-11	METAL CHIP	1K	5%	1/16W
R968	1-218-863-11	METAL GLAZE	4.7K	0.50%	1/16W
R970	1-216-851-11	METAL CHIP	330K	5%	1/16W
R971	1-216-857-11	METAL CHIP	1M	5%	1/16W
R972	1-216-853-11	METAL CHIP	470K	5%	1/16W
R973	1-216-851-11	METAL CHIP	330K	5%	1/16W
R974	1-216-817-11	METAL CHIP	470	5%	1/16W
R975	1-216-841-11	METAL CHIP	47K	5%	1/16W
R976	1-216-813-11	METAL CHIP	220	5%	1/16W
R977	1-216-051-00	METAL CHIP	1.2K	5%	1/10W
R978	1-216-051-00	METAL CHIP	1.2K	5%	1/10W
R979	1-216-810-11	METAL CHIP	120	5%	1/16W
R980	1-216-837-11	METAL CHIP	22K	5%	1/16W
R983	1-216-817-11	METAL CHIP	470	5%	1/16W
R988	1-216-840-11	METAL CHIP	39K	5%	1/16W
R989	1-216-845-11	METAL CHIP	100K	5%	1/16W
R991	1-216-822-11	METAL CHIP	1.2K	5%	1/16W
R992	1-216-823-11	METAL CHIP	1.5K	5%	1/16W
R993	1-216-827-11	METAL CHIP	3.3K	5%	1/16W
R994	1-216-831-11	METAL CHIP	6.8K	5%	1/16W

Note :
The components identified by mark ⚠ or dotted line with mark ⚠ are critical for safety.
Replace only with part number specified.

Note :
Les composants identifiés par une marque ⚠ sont critiques pour la sécurité.
Ne les remplacer que par une pièce portant le numéro spécifie.

Ref. No.	Part No.	Description			Remarks
		< SWITCH >			
S901	1-572-467-21	SWITCH, PUSH (MIRROR)(1 KEY)			
S992	1-762-833-11	SWITCH, TACTILE (VOLUME –)			
S993	1-762-833-11	SWITCH, TACTILE (VOLUME +)			
S994	1-762-833-11	SWITCH, TACTILE (BRIGHT –)			
S995	1-762-833-11	SWITCH, TACTILE (BRIGHT +)			
		< TRANSFORMER >			
T951	1-431-292-21	TRANSFORMER, DC-DC CONVERTER			
⚠T952	1-429-547-31	TRANSFORMER, INVERTER			
	A-7093-270-A	PD-75 BOARD, COMPLETE (TRV14E)			
		**********			
		(Ref.No.8,000 Series)			
		< CAPACITOR >			
C1901	1-135-259-11	TANTAL. CHIP	10uF	20%	6.3V
C1903	1-107-826-11	CERAMIC CHIP	0.1uF	10%	16V
C1904	1-162-970-11	CERAMIC CHIP	0.01uF	10%	25V
C1907	1-162-924-11	CERAMIC CHIP	56PF	5%	50V
C1908	1-107-687-11	TANTAL. CHIP	3.3uF	20%	20V
C1909	1-162-970-11	CERAMIC CHIP	0.01uF	10%	25V
C1910	1-162-957-11	CERAMIC CHIP	220PF	5%	50V
C1911	1-162-959-11	CERAMIC CHIP	330PF	5%	50V
C1913	1-164-156-11	CERAMIC CHIP	0.1uF		25V
C1914	1-162-964-11	CERAMIC CHIP	0.001uF	10%	50V
C1915	1-162-926-11	CERAMIC CHIP	82PF	5%	50V
C1916	1-107-826-11	CERAMIC CHIP	0.1uF	10%	16V
C1917	1-164-363-11	CERAMIC CHIP	560PF	5%	50V
C1918	1-135-177-21	TANTALUM CHIP	1uF	20%	20V
C1919	1-135-177-21	TANTALUM CHIP	1uF	20%	20V
C1920	1-104-916-11	TANTAL. CHIP	6.8uF	20%	20V
C1921	1-162-970-11	CERAMIC CHIP	0.01uF	10%	25V
C1922	1-162-970-11	CERAMIC CHIP	0.01uF	10%	25V
C1923	1-164-156-11	CERAMIC CHIP	0.1uF		25V
C1924	1-162-970-11	CERAMIC CHIP	0.01uF	10%	25V
C1925	1-162-970-11	CERAMIC CHIP	0.01uF	10%	25V
C1951	1-115-566-11	CERAMIC CHIP	4.7uF	10%	10V
C1952	1-164-218-11	CERAMIC CHIP	180PF	0.25PF	50V
C1953	1-164-360-11	CERAMIC CHIP	0.1uF		16V
C1954	1-107-826-11	CERAMIC CHIP	0.1uF	10%	16V
C1955	1-164-227-11	CERAMIC CHIP	0.022uF	10%	25V
C1956	1-162-966-11	CERAMIC CHIP	0.0022uF	10%	50V
C1957	1-164-227-11	CERAMIC CHIP	0.022uF	10%	25V
C1958	1-162-962-11	CERAMIC CHIP	470PF	10%	50V
C1960	1-115-566-11	CERAMIC CHIP	4.7uF	10%	10V
C1961	1-162-962-11	CERAMIC CHIP	470PF	10%	50V
C1962	1-107-826-11	CERAMIC CHIP	0.1uF	10%	16V
C1963	1-164-489-11	CERAMIC CHIP	0.22uF	10%	16V
C1964	1-162-962-11	CERAMIC CHIP	470PF	10%	50V
C1965	1-162-964-11	CERAMIC CHIP	0.001uF	10%	50V
C1966	1-164-346-11	CERAMIC CHIP	1uF		16V
C1967	1-104-911-11	TANTAL. CHIP	33uF	20%	10V
C1968	1-164-664-11	CERAMIC CHIP	0.033uF	10%	50V
C1969	1-164-505-11	CERAMIC CHIP	2.2uF		16V
C1970	1-164-005-11	CERAMIC CHIP	0.47uF		25V

Ref. No.	Part No.	Description			Remarks
C1972	1-164-505-11	CERAMIC CHIP	2.2uF		16V
C1973	1-164-505-11	CERAMIC CHIP	2.2uF		16V
C1974	1-164-005-11	CERAMIC CHIP	0.47uF		25V
C1975	1-164-505-11	CERAMIC CHIP	2.2uF		16V
C1976	1-164-004-11	CERAMIC CHIP	0.1uF	10%	25V
⚠C1977	1-113-521-11	CERAMIC CHIP	12PF	10%	3KV
C1978	1-164-360-11	CERAMIC CHIP	0.1uF		16V
		< CONNECTOR >			
CN1802	1-770-629-21	PIN, CONNECTOR 12P			
CN1803	1-691-388-11	CONNECTOR, FFC/FPC 24P			
CN1804	1-764-708-21	CONNECTOR, FFC/FPC (LIF) 9P			
CN1807	1-766-346-21	CONNECTOR, FFC/FPC 16P			
CN1951	1-764-709-11	CONNECTOR, FFC/FPC (LIF) 10P			
		< DIODE >			
D1902	8-713-102-80	DIODE 1T369-01-T8A			
D1903	8-719-422-41	DIODE MA8051-L-TX			
D1904	8-719-421-27	DIODE MA728			
D1905	8-719-061-82	DIODE TLSU1002(TPX1,SONY)			
D1951	8-719-989-33	DIODE FC806			
D1952	8-719-941-86	DIODE DAN202U			
D1953	8-719-404-49	DIODE MA111			
D1954	8-719-058-86	DIODE PG1101H-TR			
D1955	8-719-404-49	DIODE MA111			
		< IC >			
IC1901	8-759-394-52	IC LZ95NA04			
IC1902	8-759-359-49	IC NJM3414AV(TE2)			
IC1951	8-759-060-94	IC MB3785APFV-G-BND-ER			
		< COIL >			
L1901	1-414-754-11	INDUCTOR 10uH			
L1902	1-414-754-11	INDUCTOR 10uH			
L1903	1-216-295-91	CONDUCTOR, CHIP (2012)			
L1904	1-412-957-11	INDUCTOR 33uH			
L1951	1-412-056-11	INDUCTOR CHIP 4.7uH			
L1952	1-412-058-11	INDUCTOR CHIP 10uH			
L1953	1-424-674-11	COIL, CHOKE 22uH			
L1954	1-409-536-41	COIL, CHOKE 150uH			
L1955	1-414-757-11	INDUCTOR 100uH			
L1956	1-414-757-11	INDUCTOR 100uH			
L1957	1-414-757-11	INDUCTOR 100uH			
		< TRANSISTOR >			
Q1901	8-729-402-42	TRANSISTOR UN5213			
Q1904	8-729-230-63	TRANSISTOR 2SC4116-YG			
Q1905	8-729-420-24	TRANSISTOR 2SB1218A-QRS			
Q1952	8-729-402-42	TRANSISTOR UN5213			
Q1955	8-729-823-84	TRANSISTOR FP102			
Q1956	8-729-804-41	TRANSISTOR 2SB1122-S			
Q1957	8-729-039-43	TRANSISTOR FP216-TL			
Q1958	8-729-420-24	TRANSISTOR 2SB1218A-QRS			
Q1962	8-729-420-24	TRANSISTOR 2SB1218A-QRS			

Note :
The components identified by mark ⚠ or dotted line with mark ⚠ are critical for safety.
Replace only with part number specified.

Note :
Les composants identifiés par une marque ⚠ sont critiques pour la sécurité.
Ne les remplacer que par une pièce portant le numéro spécifie.

Ref. No.	Part No.	Description			Remarks
		< RESISTOR >			
R1900	1-216-857-11	METAL CHIP	1M	5%	1/16W
R1903	1-218-891-11	METAL GLAZE	68K	0.50%	1/16W
R1904	1-216-845-11	METAL CHIP	100K	5%	1/16W
R1907	1-216-844-11	METAL CHIP	82K	5%	1/16W
R1908	1-216-844-11	METAL CHIP	82K	5%	1/16W
R1909	1-216-841-11	METAL CHIP	47K	5%	1/16W
R1910	1-216-836-11	METAL CHIP	18K	5%	1/16W
R1911	1-216-829-11	METAL CHIP	4.7K	5%	1/16W
R1912	1-216-831-11	METAL CHIP	6.8K	5%	1/16W
R1913	1-216-833-11	METAL CHIP	10K	5%	1/16W
R1914	1-216-833-11	METAL CHIP	10K	5%	1/16W
R1915	1-216-829-11	METAL CHIP	4.7K	5%	1/16W
R1916	1-216-837-11	METAL CHIP	22K	5%	1/16W
R1917	1-216-833-11	METAL CHIP	10K	5%	1/16W
R1918	1-216-838-11	METAL CHIP	27K	5%	1/16W
R1919	1-216-857-11	METAL CHIP	1M	5%	1/16W
R1920	1-216-857-11	METAL CHIP	1M	5%	1/16W
R1921	1-216-843-11	METAL CHIP	68K	5%	1/16W
R1922	1-216-837-11	METAL CHIP	22K	5%	1/16W
R1923	1-216-843-11	METAL CHIP	68K	5%	1/16W
R1924	1-216-841-11	METAL CHIP	47K	5%	1/16W
R1925	1-216-829-11	METAL CHIP	4.7K	5%	1/16W
R1926	1-216-839-11	METAL CHIP	33K	5%	1/16W
R1927	1-216-829-11	METAL CHIP	4.7K	5%	1/16W
R1928	1-216-833-11	METAL CHIP	10K	5%	1/16W
R1929	1-216-841-11	METAL CHIP	47K	5%	1/16W
R1930	1-216-839-11	METAL CHIP	33K	5%	1/16W
R1931	1-216-845-11	METAL CHIP	100K	5%	1/16W
R1932	1-216-842-11	METAL CHIP	56K	5%	1/16W
R1933	1-216-850-11	METAL CHIP	270K	5%	1/16W
R1934	1-218-883-11	METAL GLAZE	33K	0.50%	1/16W
R1935	1-218-879-11	METAL GLAZE	22K	0.50%	1/16W
R1936	1-216-841-11	METAL CHIP	47K	5%	1/16W
R1937	1-218-883-11	METAL GLAZE	33K	0.50%	1/16W
R1938	1-218-879-11	METAL GLAZE	22K	0.50%	1/16W
R1939	1-216-837-11	METAL CHIP	22K	5%	1/16W
R1940	1-216-864-11	METAL CHIP	0	5%	1/16W
R1943	1-216-833-11	METAL CHIP	10K	5%	1/16W
R1945	1-216-841-11	METAL CHIP	47K	5%	1/16W
R1947	1-216-821-11	METAL CHIP	1K	5%	1/16W
R1949	1-216-833-11	METAL CHIP	10K	5%	1/16W
R1951	1-216-833-11	METAL CHIP	10K	5%	1/16W
R1952	1-216-840-11	METAL CHIP	39K	5%	1/16W
R1953	1-216-833-11	METAL CHIP	10K	5%	1/16W
R1954	1-218-895-11	METAL GLAZE	100K	0.50%	1/16W
R1955	1-218-885-11	METAL GLAZE	39K	0.50%	1/16W
R1956	1-216-841-11	METAL CHIP	47K	5%	1/16W
R1957	1-218-883-11	METAL GLAZE	33K	0.50%	1/16W
R1958	1-216-864-11	METAL CHIP	0	5%	1/16W
R1959	1-218-871-11	METAL GLAZE	10K	0.50%	1/16W
R1960	1-218-885-11	METAL GLAZE	39K	0.50%	1/16W
R1961	1-216-864-11	METAL CHIP	0	5%	1/16W
R1962	1-218-879-11	METAL GLAZE	22K	0.50%	1/16W
R1963	1-218-871-11	METAL GLAZE	10K	0.50%	1/16W
R1964	1-218-877-11	METAL GLAZE	18K	0.50%	1/16W
R1965	1-216-825-11	METAL CHIP	2.2K	5%	1/16W
R1966	1-216-825-11	METAL CHIP	2.2K	5%	1/16W
R1967	1-216-821-11	METAL CHIP	1K	5%	1/16W
R1968	1-218-863-11	METAL GLAZE	4.7K	0.50%	1/16W
R1970	1-216-851-11	METAL CHIP	330K	5%	1/16W
R1971	1-216-857-11	METAL CHIP	1M	5%	1/16W
R1972	1-216-853-11	METAL CHIP	470K	5%	1/16W
R1973	1-216-851-11	METAL CHIP	330K	5%	1/16W
R1974	1-216-817-11	METAL CHIP	470	5%	1/16W
R1975	1-216-841-11	METAL CHIP	47K	5%	1/16W
R1976	1-216-813-11	METAL CHIP	220	5%	1/16W
R1977	1-216-051-00	METAL CHIP	1.2K	5%	1/10W
R1978	1-216-051-00	METAL CHIP	1.2K	5%	1/10W
R1979	1-216-810-11	METAL CHIP	120	5%	1/16W
R1980	1-216-837-11	METAL CHIP	22K	5%	1/16W
R1983	1-216-817-11	METAL CHIP	470	5%	1/16W
R1987	1-216-845-11	METAL CHIP	100K	5%	1/16W
R1991	1-216-822-11	METAL CHIP	1.2K	5%	1/16W
R1992	1-216-823-11	METAL CHIP	1.5K	5%	1/16W
R1993	1-216-827-11	METAL CHIP	3.3K	5%	1/16W
R1994	1-216-831-11	METAL CHIP	6.8K	5%	1/16W
		< SWITCH >			
S1901	1-572-467-21	SWITCH, PUSH (MIRROR)(1 KEY)			
S1992	1-771-029-21	SWITCH, TACTILE (VOLUME –)			
S1993	1-771-029-21	SWITCH, TACTILE (VOLUME +)			
S1994	1-771-029-21	SWITCH, TACTILE (BRIGHT –)			
S1995	1-771-029-21	SWITCH, TACTILE (BRIGHT +)			
		< TRANSFORMER >			
T1951	1-431-291-11	TRANSFORMER, DC-DC CONVERTER			
⚠T1952	1-429-547-31	TRANSFORMER, INVERTER			
	A-7093-279-A	PD-76 BOARD, COMPLETE ********** (TRV44/TRV52/TRV512)			
	A-7093-281-A	PD-76 BOARD, COMPLETE (TRV44E) ********** (Ref.No.8,000 Series)			
		< CAPACITOR >			
C806	1-135-259-11	TANTAL. CHIP	10uF	20%	6.3V
C808	1-162-969-11	CERAMIC CHIP	0.0068uF	10%	25V
C810	1-107-685-11	TANTAL. CHIP	15uF	20%	6.3V
C811	1-162-970-11	CERAMIC CHIP	0.01uF	10%	25V
C812	1-104-912-11	TANTAL. CHIP	3.3uF	20%	6.3V
C813	1-135-333-11	TANTAL. CHIP	1uF	20%	16V
C814	1-162-970-11	CERAMIC CHIP	0.01uF	10%	25V
C816	1-162-963-11	CERAMIC CHIP	680PF	10%	50V (TRV44E)
C818	1-107-826-11	CERAMIC CHIP	0.1uF	10%	16V
C820	1-162-970-11	CERAMIC CHIP	0.01uF	10%	25V (TRV44E)
C822	1-165-176-11	CERAMIC CHIP	0.047uF	10%	16V
C823	1-162-970-11	CERAMIC CHIP	0.01uF	10%	25V (TRV44E)
C825	1-162-970-11	CERAMIC CHIP	0.01uF	10%	25V
C826	1-162-970-11	CERAMIC CHIP	0.01uF	10%	25V (TRV44E)
C827	1-162-970-11	CERAMIC CHIP	0.01uF	10%	25V (TRV44E)

Note :
The components identified by mark ⚠ or dotted line with mark ⚠ are critical for safety.
Replace only with part number specified.

Note :
Les composants identifiés par une marque ⚠ sont critiques pour la sécurité.
Ne les remplacer que par une pièce portant le numéro spécifie.

Ref. No.	Part No.	Description			Remarks
C828	1-162-970-11	CERAMIC CHIP	0.01uF	10%	25V
C829	1-107-826-11	CERAMIC CHIP	0.1uF	10%	16V
C832	1-162-926-11	CERAMIC CHIP	82PF	5%	50V
					(TRV44E)
C835	1-107-823-11	CERAMIC CHIP	0.47uF	10%	16V
					(TRV44E)
C835	1-164-004-11	CERAMIC CHIP	0.1uF	10%	25V
					(TRV34/TRV44/TRV52/TRV512)
C836	1-107-823-11	CERAMIC CHIP	0.47uF	10%	16V
					(TRV44E)
C836	1-164-004-11	CERAMIC CHIP	0.1uF	10%	25V
					(TRV34/TRV44/TRV52/TRV512)
C837	1-107-823-11	CERAMIC CHIP	0.47uF	10%	16V
					(TRV44E)
C837	1-164-004-11	CERAMIC CHIP	0.1uF	10%	25V
					(TRV34/TRV44/TRV52/TRV512)
C838	1-162-970-11	CERAMIC CHIP	0.01uF	10%	25V
C839	1-162-970-11	CERAMIC CHIP	0.01uF	10%	25V
C840	1-107-682-11	CERAMIC CHIP	1uF	10%	16V
C841	1-135-214-21	TANTAL. CHIP	4.7uF	20%	20V
C842	1-162-970-11	CERAMIC CHIP	0.01uF	10%	25V
C844	1-164-217-11	CERAMIC CHIP	150PF	5%	50V
C900	1-162-970-11	CERAMIC CHIP	0.01uF	10%	25V
C901	1-104-916-11	TANTAL. CHIP	6.8uF	20%	20V
C902	1-162-970-11	CERAMIC CHIP	0.01uF	10%	25V
C903	1-162-970-11	CERAMIC CHIP	0.01uF	10%	25V
C904	1-107-685-11	TANTAL. CHIP	15uF	20%	6.3V
C905	1-164-156-11	CERAMIC CHIP	0.1uF		25V
C906	1-107-686-11	TANTAL. CHIP	4.7uF	20%	16V
C909	1-162-923-11	CERAMIC CHIP	47PF	5%	50V
C910	1-164-363-11	CERAMIC CHIP	560PF	5%	50V
C911	1-107-826-11	CERAMIC CHIP	0.1uF	10%	16V
C912	1-162-964-11	CERAMIC CHIP	0.001uF	10%	50V
C913	1-162-926-11	CERAMIC CHIP	82PF	5%	50V
C914	1-107-826-11	CERAMIC CHIP	0.1uF	10%	16V
C915	1-165-319-11	CERAMIC CHIP	0.1uF		50V
C916	1-164-156-11	CERAMIC CHIP	0.1uF		25V
C917	1-164-156-11	CERAMIC CHIP	0.1uF		25V
C918	1-164-156-11	CERAMIC CHIP	0.1uF		25V
C919	1-164-156-11	CERAMIC CHIP	0.1uF		25V
C920	1-162-970-11	CERAMIC CHIP	0.01uF	10%	25V
C951	1-115-566-11	CERAMIC CHIP	4.7uF	10%	10V
C952	1-164-218-11	CERAMIC CHIP	180PF	0.25PF	50V
C953	1-164-156-11	CERAMIC CHIP	0.1uF		25V
C954	1-107-826-11	CERAMIC CHIP	0.1uF	10%	16V
C955	1-164-360-11	CERAMIC CHIP	0.1uF		16V
C956	1-162-966-11	CERAMIC CHIP	0.0022uF	10%	50V
C957	1-164-227-11	CERAMIC CHIP	0.022uF	10%	25V
C958	1-162-962-11	CERAMIC CHIP	470PF	10%	50V
C959	1-115-566-11	CERAMIC CHIP	4.7uF	10%	10V
C960	1-115-566-11	CERAMIC CHIP	4.7uF	10%	10V
C961	1-162-962-11	CERAMIC CHIP	470PF	10%	50V
C962	1-164-004-11	CERAMIC CHIP	0.1uF	10%	25V
C963	1-164-489-11	CERAMIC CHIP	0.22uF	10%	16V
C964	1-162-962-11	CERAMIC CHIP	470PF	10%	50V
C965	1-162-964-11	CERAMIC CHIP	0.001uF	10%	50V
C966	1-164-346-11	CERAMIC CHIP	1uF		16V
C967	1-104-911-11	TANTAL. CHIP	33uF	20%	10V
C968	1-164-664-11	CERAMIC CHIP	0.033uF	10%	50V
C970	1-164-005-11	CERAMIC CHIP	0.47uF		25V
C971	1-164-505-11	CERAMIC CHIP	2.2uF		16V

Ref. No.	Part No.	Description			Remarks
C972	1-164-505-11	CERAMIC CHIP	2.2uF		16V
C973	1-164-005-11	CERAMIC CHIP	0.47uF		25V
C974	1-164-505-11	CERAMIC CHIP	2.2uF		16V
C975	1-164-505-11	CERAMIC CHIP	2.2uF		16V
C976	1-164-004-11	CERAMIC CHIP	0.1uF	10%	25V
⚠C977	1-113-521-11	CERAMIC CHIP	12PF	10%	3KV
C978	1-162-964-11	CERAMIC CHIP	0.001uF	10%	50V
C979	1-164-227-11	CERAMIC CHIP	0.022uF	10%	25V
		< CONNECTOR >			
CN801	1-770-627-21	PIN, CONNECTOR 10P			
CN802	1-770-629-21	PIN, CONNECTOR 12P			
CN803	1-573-366-21	CONNECTOR, FFC/FPC 26P			
CN804	1-764-708-21	CONNECTOR, FFC/FPC (LIF) 9P			
CN805	1-764-709-11	CONNECTOR, FFC/FPC (LIF) 10P			
CN808	1-573-929-11	CONNECTOR, FFC/FPC (ZIF) 20P			
		< DIODE >			
D801	8-713-102-80	DIODE 1T369-01-T8A (TRV44E)			
D901	8-719-404-49	DIODE MA111			
D903	8-713-102-80	DIODE 1T369-01-T8A			
D904	8-719-421-27	DIODE MA728			
D905	8-719-061-82	DIODE TLSU1002(TPX1,SONY)			
D951	8-719-989-33	DIODE FC806			
D952	8-719-941-86	DIODE DAN202U			
D953	8-719-404-49	DIODE MA111			
D954	8-719-404-49	DIODE MA111			
		< IC >			
IC801	8-752-067-59	IC CXA1785R-T4			
IC802	8-759-355-92	IC AK9813AF-E2			
IC900	8-759-073-95	IC SED1510FOC-T4			
IC901	8-759-443-40	IC CM7013L1-T4			
IC902	8-759-359-49	IC NJM3414AV(TE2)			
IC951	8-759-060-94	IC MB3785APFV-G-BND-ER			
		< COIL >			
L803	1-414-755-11	INDUCTOR 22uH			
L804	1-412-956-21	INDUCTOR 27uH (TRV44E)			
L805	1-414-754-11	INDUCTOR 10uH			
L901	1-414-754-11	INDUCTOR 10uH			
L902	1-216-295-91	CONDUCTOR, CHIP (2012)			
L903	1-414-754-11	INDUCTOR 10uH			
L904	1-412-951-11	INDUCTOR 10uH			
L951	1-412-056-11	INDUCTOR CHIP 4.7uH			
L952	1-412-058-11	INDUCTOR CHIP 10uH			
L953	1-424-674-11	COIL, CHOKE 22uH			
L954	1-409-536-41	COIL, CHOKE 150uH			
L955	1-414-757-11	INDUCTOR 100uH			
L956	1-414-757-11	INDUCTOR 100uH			
L957	1-414-757-11	INDUCTOR 100uH			

Note :	**Note :**
The components identified by mark ⚠ or dotted line with mark ⚠ are critical for safety. Replace only with part number specified.	Les composants identifiés par une marque ⚠ sont critiques pour la sécurité. Ne les remplacer que par une pièce portant le numéro spécifie.

Ref. No.	Part No.	Description			Remarks
		< TRANSISTOR >			
Q802	8-729-420-24	TRANSISTOR	2SB1218A-QRS		
Q805	8-729-230-63	TRANSISTOR	2SC4116-YG (TRV44E)		
Q901	8-729-402-42	TRANSISTOR	UN5213		
Q952	8-729-402-42	TRANSISTOR	UN5213		
Q955	8-729-823-84	TRANSISTOR	FP102		
Q956	8-729-804-41	TRANSISTOR	2SB1122-S		
Q957	8-729-039-43	TRANSISTOR	FP216-TL		
Q958	8-729-420-24	TRANSISTOR	2SB1218A-QRS		
Q959	8-729-403-35	TRANSISTOR	UN5113		
Q960	8-729-039-87	TRANSISTOR	NDS356P		
		< RESISTOR >			
R801	1-216-818-11	METAL CHIP	560	5%	1/16W
R809	1-216-817-11	METAL CHIP	470	5%	1/16W
R811	1-216-818-11	METAL CHIP	560	5%	1/16W
R812	1-216-837-11	METAL CHIP	22K	5%	1/16W
R813	1-216-841-11	METAL CHIP	47K	5%	1/16W
R814	1-218-877-11	METAL GLAZE	18K	0.50%	1/16W
R815	1-216-841-11	METAL CHIP	47K	5%	1/16W
R816	1-216-851-11	METAL CHIP	330K	5%	1/16W
R817	1-216-841-11	METAL CHIP	47K	5%	1/16W
R818	1-216-840-11	METAL CHIP	39K	5%	1/16W
R819	1-216-821-11	METAL CHIP	1K	5%	1/16W
R822	1-216-821-11	METAL CHIP	1K	5%	1/16W
R825	1-219-570-11	METAL GLAZE	10M	5%	1/16W (TRV44E)
R826	1-216-837-11	METAL CHIP	22K	5%	1/16W
R827	1-216-843-11	METAL CHIP	68K	5%	1/16W
R828	1-216-841-11	METAL CHIP	47K	5%	1/16W
R829	1-216-840-11	METAL CHIP	39K	5%	1/16W
R830	1-216-840-11	METAL CHIP	39K	5%	1/16W
R831	1-216-840-11	METAL CHIP	39K	5%	1/16W
R832	1-216-836-11	METAL CHIP	18K	5%	1/16W
R833	1-216-840-11	METAL CHIP	39K	5%	1/16W
R834	1-216-841-11	METAL CHIP	47K	5%	1/16W
R835	1-216-839-11	METAL CHIP	33K	5%	1/16W
R836	1-216-857-11	METAL CHIP	1M	5%	1/16W
R837	1-216-841-11	METAL CHIP	47K	5%	1/16W
R838	1-216-841-11	METAL CHIP	47K	5%	1/16W
R839	1-216-827-11	METAL CHIP	3.3K	5%	1/16W (TRV44E)
R840	1-216-864-11	METAL CHIP	0	5%	1/16W (TRV44E)
R841	1-216-837-11	METAL CHIP	22K	5%	1/16W (TRV44E)
R842	1-216-837-11	METAL CHIP	22K	5%	1/16W
R843	1-216-819-11	METAL CHIP	680	5%	1/16W (TRV44E)
R843	1-216-825-11	METAL CHIP	2.2K	5%	1/16W (TRV34/TRV44/TRV52/TRV512)
R845	1-216-831-11	METAL CHIP	6.8K	5%	1/16W (TRV44E)
R846	1-216-841-11	METAL CHIP	47K	5%	1/16W
R847	1-216-841-11	METAL CHIP	47K	5%	1/16W
R848	1-216-829-11	METAL CHIP	4.7K	5%	1/16W (TRV44E)
R849	1-216-837-11	METAL CHIP	22K	5%	1/16W
R852	1-216-864-11	METAL CHIP	0	5%	1/16W (TRV44E)
R853	1-216-809-11	METAL CHIP	100	5%	1/16W
R854	1-216-809-11	METAL CHIP	100	5%	1/16W
R855	1-216-809-11	METAL CHIP	100	5%	1/16W
R856	1-216-832-11	METAL CHIP	8.2K	5%	1/16W
R857	1-216-830-11	METAL CHIP	5.6K	5%	1/16W
R858	1-216-829-11	METAL CHIP	4.7K	5%	1/16W (TRV34/TRV44/TRV52/TRV512)
R859	1-216-833-11	METAL CHIP	10K	5%	1/16W (TRV34/TRV44/TRV52/TRV512)
R860	1-216-864-11	METAL CHIP	0	5%	1/16W (TRV44E)
R860	1-216-844-11	METAL CHIP	82K	5%	1/16W (TRV34/TRV44/TRV52/TRV512)
R861	1-216-819-11	METAL CHIP	680	5%	1/16W
R862	1-216-849-11	METAL CHIP	220K	5%	1/16W
R863	1-216-864-11	METAL CHIP	0	5%	1/16W
R900	1-216-857-11	METAL CHIP	1M	5%	1/16W
R901	1-216-843-11	METAL CHIP	68K	5%	1/16W
R902	1-216-837-11	METAL CHIP	22K	5%	1/16W
R903	1-216-841-11	METAL CHIP	47K	5%	1/16W
R904	1-218-891-11	METAL GLAZE	68K	0.50%	1/16W
R905	1-218-883-11	METAL GLAZE	33K	0.50%	1/16W
R906	1-216-825-11	METAL CHIP	2.2K	5%	1/16W
R907	1-216-833-11	METAL CHIP	10K	5%	1/16W (TRV44E)
R908	1-216-840-11	METAL CHIP	39K	5%	1/16W
R909	1-216-841-11	METAL CHIP	47K	5%	1/16W
R910	1-216-833-11	METAL CHIP	10K	5%	1/16W
R911	1-216-833-11	METAL CHIP	10K	5%	1/16W (TRV34/TRV44/TRV52/TRV512)
R914	1-216-829-11	METAL CHIP	4.7K	5%	1/16W
R916	1-216-843-11	METAL CHIP	68K	5%	1/16W
R917	1-216-843-11	METAL CHIP	68K	5%	1/16W
R919	1-216-841-11	METAL CHIP	47K	5%	1/16W
R920	1-216-841-11	METAL CHIP	47K	5%	1/16W
R922	1-216-857-11	METAL CHIP	1M	5%	1/16W
R923	1-216-837-11	METAL CHIP	22K	5%	1/16W
R925	1-216-833-11	METAL CHIP	10K	5%	1/16W
R926	1-216-857-11	METAL CHIP	1M	5%	1/16W
R928	1-218-889-11	METAL GLAZE	56K	0.50%	1/16W
R929	1-216-828-11	METAL CHIP	3.9K	5%	1/16W (TRV44E)
R929	1-216-831-11	METAL CHIP	6.8K	5%	1/16W (TRV34/TRV44/TRV52/TRV512)
R930	1-216-853-11	METAL CHIP	470K	5%	1/16W
R931	1-216-850-11	METAL CHIP	270K	5%	1/16W
R932	1-216-864-11	METAL CHIP	0	5%	1/16W
R933	1-216-841-11	METAL CHIP	47K	5%	1/16W
R934	1-216-864-11	METAL CHIP	0	5%	1/16W
R947	1-216-817-11	METAL CHIP	470	5%	1/16W
R951	1-216-833-11	METAL CHIP	10K	5%	1/16W
R952	1-216-840-11	METAL CHIP	39K	5%	1/16W
R953	1-216-833-11	METAL CHIP	10K	5%	1/16W
R954	1-218-903-11	METAL GLAZE	220K	0.50%	1/16W
R955	1-218-885-11	METAL GLAZE	39K	0.50%	1/16W
R957	1-218-887-11	METAL GLAZE	47K	0.50%	1/16W
R959	1-218-875-11	METAL GLAZE	15K	0.50%	1/16W
R960	1-218-885-11	METAL GLAZE	39K	0.50%	1/16W
R961	1-216-823-11	METAL CHIP	1.5K	5%	1/16W
R962	1-218-879-11	METAL GLAZE	22K	0.50%	1/16W
R963	1-218-871-11	METAL GLAZE	10K	0.50%	1/16W
R964	1-218-889-11	METAL GLAZE	56K	0.50%	1/16W
R965	1-216-822-11	METAL CHIP	1.2K	5%	1/16W
R966	1-216-825-11	METAL CHIP	2.2K	5%	1/16W
R967	1-216-821-11	METAL CHIP	1K	5%	1/16W
R968	1-218-863-11	METAL GLAZE	4.7K	0.50%	1/16W
R970	1-216-851-11	METAL CHIP	330K	5%	1/16W
R971	1-216-857-11	METAL CHIP	1M	5%	1/16W
R972	1-216-853-11	METAL CHIP	470K	5%	1/16W

Ref. No.	Part No.	Description			Remarks
R973	1-216-851-11	METAL CHIP	330K	5%	1/16W
R974	1-216-817-11	METAL CHIP	470	5%	1/16W
R975	1-216-841-11	METAL CHIP	47K	5%	1/16W
R976	1-216-813-11	METAL CHIP	220	5%	1/16W
R977	1-216-055-00	METAL CHIP	1.8K	5%	1/10W
R978	1-216-055-00	METAL CHIP	1.8K	5%	1/10W
R979	1-216-810-11	METAL CHIP	120	5%	1/16W
R980	1-216-837-11	METAL CHIP	22K	5%	1/16W
R981	1-216-817-11	METAL CHIP	470	5%	1/16W
R982	1-216-840-11	METAL CHIP	39K	5%	1/16W
R983	1-216-857-11	METAL CHIP	1M	5%	1/16W
R984	1-216-845-11	METAL CHIP	100K	5%	1/16W
R991	1-216-822-11	METAL CHIP	1.2K	5%	1/16W
R992	1-216-823-11	METAL CHIP	1.5K	5%	1/16W
R993	1-216-827-11	METAL CHIP	3.3K	5%	1/16W
R994	1-216-831-11	METAL CHIP	6.8K	5%	1/16W
		< SWITCH >			
S901	1-572-467-21	SWITCH, PUSH (MIRROR)(1 KEY)			
S991	1-762-333-21	SWITCH, TACTILE (PROGRAM AE)			
S992	1-771-029-21	SWITCH, TACTILE (VOLUME –)			
S993	1-771-029-21	SWITCH, TACTILE (VOLUME +)			
S994	1-771-029-21	SWITCH, TACTILE (BRIGHT –)			
S995	1-771-029-21	SWITCH, TACTILE (BRIGHT +)			
		< TRANSFORMER >			
T951	1-431-213-11	TRANSFORMER, DC-DC CONVERTER			
⚠T952	1-429-507-31	TRANSFORMER, INVERTER			
		< VIBRATOR >			
X801	1-579-661-21	OSCILLATOR, CRYSTAL 4.43MHz(TRV44E)			
X801	1-579-466-11	VIBRATOR, CRYSTAL 3.58MHz			
		(TRV34/TRV44/TRV52/TRV512)			
	A-7093-277-A	PD-77 BOARD, COMPLETE			
		**********			
		(TRV32/TRV34/TRV53/TRV312)			
		(Ref.No.8,000 Series)			
		< CAPACITOR >			
C1804	1-109-982-11	CERAMIC CHIP	1uF	10%	10V
C1805	1-162-963-11	CERAMIC CHIP	680PF	10%	50V
C1806	1-135-259-11	TANTAL. CHIP	10uF	20%	6.3V
C1808	1-104-752-11	TANTAL. CHIP	33uF	20%	6.3V
C1810	1-162-970-11	CERAMIC CHIP	0.01uF	10%	25V
C1811	1-162-969-11	CERAMIC CHIP	0.0068uF	10%	25V
C1812	1-104-912-11	TANTAL. CHIP	3.3uF	20%	6.3V
C1813	1-162-970-11	CERAMIC CHIP	0.01uF	10%	25V
C1820	1-162-970-11	CERAMIC CHIP	0.01uF	10%	25V
C1822	1-107-826-11	CERAMIC CHIP	0.1uF	10%	16V
C1823	1-165-176-11	CERAMIC CHIP	0.047uF	10%	16V
C1824	1-162-970-11	CERAMIC CHIP	0.01uF	10%	25V
C1826	1-107-826-11	CERAMIC CHIP	0.1uF	10%	16V
C1831	1-162-913-11	CERAMIC CHIP	8PF	0.5PF	50V
C1832	1-162-970-11	CERAMIC CHIP	0.01uF	10%	25V
C1833	1-104-851-11	TANTAL. CHIP	10uF	20%	10V
C1834	1-107-682-11	CERAMIC CHIP	1uF	10%	16V
C1835	1-162-970-11	CERAMIC CHIP	0.01uF	10%	25V
C1836	1-164-004-11	CERAMIC CHIP	0.1uF	10%	25V
C1837	1-164-004-11	CERAMIC CHIP	0.1uF	10%	25V

Ref. No.	Part No.	Description			Remarks
C1838	1-164-004-11	CERAMIC CHIP	0.1uF	10%	25V
C1840	1-164-217-11	CERAMIC CHIP	150PF	5%	50V
C1900	1-162-970-11	CERAMIC CHIP	0.01uF	10%	25V
C1901	1-135-259-11	TANTAL. CHIP	10uF	20%	6.3V
C1902	1-162-970-11	CERAMIC CHIP	0.01uF	10%	25V
C1903	1-107-826-11	CERAMIC CHIP	0.1uF	10%	16V
C1904	1-162-970-11	CERAMIC CHIP	0.01uF	10%	25V
C1907	1-162-923-11	CERAMIC CHIP	47PF	5%	50V
C1908	1-107-687-11	TANTAL. CHIP	3.3uF	20%	20V
C1909	1-162-970-11	CERAMIC CHIP	0.01uF	10%	25V
C1910	1-162-957-11	CERAMIC CHIP	220PF	5%	50V
C1911	1-162-959-11	CERAMIC CHIP	330PF	5%	50V
C1913	1-107-826-11	CERAMIC CHIP	0.1uF	10%	16V
C1914	1-162-964-11	CERAMIC CHIP	0.001uF	10%	50V
C1915	1-162-926-11	CERAMIC CHIP	82PF	5%	50V
C1916	1-107-826-11	CERAMIC CHIP	0.1uF	10%	16V
C1917	1-164-363-11	CERAMIC CHIP	560PF	5%	50V
C1918	1-135-177-21	TANTALUM CHIP	1uF	20%	20V
C1919	1-135-177-21	TANTALUM CHIP	1uF	20%	20V
C1920	1-135-212-21	TANTAL. CHIP	2.2uF	20%	25V
C1921	1-162-970-11	CERAMIC CHIP	0.01uF	10%	25V
C1922	1-162-970-11	CERAMIC CHIP	0.01uF	10%	25V
C1923	1-164-156-11	CERAMIC CHIP	0.1uF		25V
C1924	1-162-970-11	CERAMIC CHIP	0.01uF	10%	25V
C1951	1-115-566-11	CERAMIC CHIP	4.7uF	10%	10V
C1952	1-164-218-11	CERAMIC CHIP	180PF	0.25PF	50V
C1953	1-164-156-11	CERAMIC CHIP	0.1uF		25V
C1954	1-107-826-11	CERAMIC CHIP	0.1uF	10%	16V
C1955	1-164-360-11	CERAMIC CHIP	0.1uF		16V
C1956	1-162-966-11	CERAMIC CHIP	0.0022uF	10%	50V
C1957	1-164-227-11	CERAMIC CHIP	0.022uF	10%	25V
C1958	1-162-962-11	CERAMIC CHIP	470PF	10%	50V
C1959	1-115-566-11	CERAMIC CHIP	4.7uF	10%	10V
C1960	1-115-566-11	CERAMIC CHIP	4.7uF	10%	10V
C1961	1-162-962-11	CERAMIC CHIP	470PF	10%	50V
C1962	1-164-004-11	CERAMIC CHIP	0.1uF	10%	25V
C1963	1-164-489-11	CERAMIC CHIP	0.22uF	10%	16V
C1964	1-162-962-11	CERAMIC CHIP	470PF	10%	50V
C1965	1-162-964-11	CERAMIC CHIP	0.001uF	10%	50V
C1966	1-164-346-11	CERAMIC CHIP	1uF		16V
C1967	1-104-911-11	TANTAL. CHIP	33uF	20%	10V
C1968	1-164-664-11	CERAMIC CHIP	0.033uF	10%	50V
C1970	1-164-505-11	CERAMIC CHIP	2.2uF		16V
C1971	1-164-346-11	CERAMIC CHIP	1uF		16V
C1972	1-164-505-11	CERAMIC CHIP	2.2uF		16V
C1973	1-164-505-11	CERAMIC CHIP	2.2uF		16V
C1974	1-164-346-11	CERAMIC CHIP	1uF		16V
C1975	1-164-505-11	CERAMIC CHIP	2.2uF		16V
C1976	1-164-004-11	CERAMIC CHIP	0.1uF	10%	25V
⚠C1977	1-113-521-11	CERAMIC CHIP	12PF	10%	3KV
C1979	1-164-227-11	CERAMIC CHIP	0.022uF	10%	25V

Note :
The components identified by mark ⚠ or dotted line with mark ⚠ are critical for safety.
Replace only with part number specified.

Note :
Les composants identifiés par une marque ⚠ sont critiques pour la sécurité.
Ne les remplacer que par une pièce portant le numéro spécifie.

PD-77

Ref. No.	Part No.	Description	Remarks
		< CONNECTOR >	
CN1801	1-770-627-21	PIN, CONNECTOR 10P	
CN1802	1-770-629-21	PIN, CONNECTOR 12P	
CN1803	1-573-364-11	CONNECTOR, FFC/FPC 24P	
CN1804	1-764-708-21	CONNECTOR, FFC/FPC (LIF) 9P	
CN1805	1-764-709-11	CONNECTOR, FFC/FPC (LIF) 10P	
CN1808	1-573-929-11	CONNECTOR, FFC/FPC (ZIF) 20P	
		< DIODE >	
D1902	8-713-102-80	DIODE 1T369-01-T8A	
D1903	8-719-422-41	DIODE MA8051-L-TX	
D1904	8-719-421-27	DIODE MA728	
D1905	8-719-061-82	DIODE TLSU1002(TPX1,SONY)	
D1951	8-719-989-33	DIODE FC806	
D1952	8-719-941-86	DIODE DAN202U	
D1953	8-719-404-49	DIODE MA111	
D1954	8-719-404-49	DIODE MA111	
		< IC >	
IC1801	8-759-450-52	IC IR3Y29B4	
IC1802	8-759-355-92	IC AK9813AF-E2	
IC1900	8-759-073-95	IC SED1510FOC-T4	
IC1901	8-759-374-39	IC LZ95N934	
IC1902	8-759-359-49	IC NJM3414AV(TE2)	
IC1951	8-759-060-94	IC MB3785APFV-G-BND-ER	
		< COIL >	
L1803	1-414-755-11	INDUCTOR 22uH	
L1805	1-216-295-91	CONDUCTOR, CHIP (2012)	
L1901	1-414-754-11	INDUCTOR 10uH	
L1902	1-414-754-11	INDUCTOR 10uH	
L1903	1-216-295-91	CONDUCTOR, CHIP (2012)	
L1904	1-412-953-11	INDUCTOR 15uH	
L1951	1-412-056-11	INDUCTOR CHIP 4.7uH	
L1952	1-412-058-11	INDUCTOR CHIP 10uH	
L1953	1-424-674-11	COIL, CHOKE 22uH	
L1954	1-409-536-41	COIL, CHOKE 150uH	
L1955	1-414-757-11	INDUCTOR 100uH	
L1956	1-414-757-11	INDUCTOR 100uH	
L1957	1-414-757-11	INDUCTOR 100uH	
		< TRANSISTOR >	
Q1802	8-729-230-60	TRANSISTOR 2SA1586-YG	
Q1803	8-729-230-63	TRANSISTOR 2SC4116-YG	
Q1901	8-729-402-42	TRANSISTOR UN5213	
Q1904	8-729-230-63	TRANSISTOR 2SC4116-YG	
Q1905	8-729-230-60	TRANSISTOR 2SA1586-YG	
Q1952	8-729-402-42	TRANSISTOR UN5213	
Q1953	8-729-230-60	TRANSISTOR 2SA1586-YG	
Q1953	8-729-420-24	TRANSISTOR 2SB1218A-QRS	
Q1955	8-729-823-84	TRANSISTOR FP102	
Q1956	8-729-804-41	TRANSISTOR 2SB1122-S	
Q1957	8-729-039-43	TRANSISTOR FP216-TL	
Q1958	8-729-230-60	TRANSISTOR 2SA1586-YG	

Ref. No.	Part No.	Description			Remarks
		< RESISTOR >			
R1801	1-216-818-11	METAL CHIP	560	5%	1/16W
R1809	1-216-817-11	METAL CHIP	470	5%	1/16W
R1815	1-216-818-11	METAL CHIP	560	5%	1/16W
R1817	1-216-818-11	METAL CHIP	560	5%	1/16W
R1818	1-216-838-11	METAL CHIP	27K	5%	1/16W
R1819	1-216-845-11	METAL CHIP	100K	5%	1/16W
R1820	1-218-877-11	METAL GLAZE	18K	0.50%	1/16W
R1821	1-216-851-11	METAL CHIP	330K	5%	1/16W
R1823	1-216-833-11	METAL CHIP	10K	5%	1/16W
R1824	1-216-842-11	METAL CHIP	56K	5%	1/16W
R1826	1-216-839-11	METAL CHIP	33K	5%	1/16W
R1827	1-216-841-11	METAL CHIP	47K	5%	1/16W
R1829	1-216-841-11	METAL CHIP	47K	5%	1/16W
R1832	1-216-838-11	METAL CHIP	27K	5%	1/16W
R1833	1-216-834-11	METAL CHIP	12K	5%	1/16W
R1836	1-216-836-11	METAL CHIP	18K	5%	1/16W
R1837	1-216-837-11	METAL CHIP	22K	5%	1/16W
R1838	1-216-842-11	METAL CHIP	56K	5%	1/16W
R1840	1-216-857-11	METAL CHIP	1M	5%	1/16W
R1842	1-216-837-11	METAL CHIP	22K	5%	1/16W
R1843	1-216-839-11	METAL CHIP	33K	5%	1/16W
R1846	1-216-836-11	METAL CHIP	18K	5%	1/16W
R1847	1-216-839-11	METAL CHIP	33K	5%	1/16W
R1848	1-216-825-11	METAL CHIP	2.2K	5%	1/16W
R1851	1-216-809-11	METAL CHIP	100	5%	1/16W
R1852	1-216-809-11	METAL CHIP	100	5%	1/16W
R1853	1-216-809-11	METAL CHIP	100	5%	1/16W
R1854	1-216-838-11	METAL CHIP	27K	5%	1/16W
R1855	1-216-832-11	METAL CHIP	8.2K	5%	1/16W
R1856	1-216-837-11	METAL CHIP	22K	5%	1/16W
R1857	1-216-843-11	METAL CHIP	68K	5%	1/16W
R1858	1-216-830-11	METAL CHIP	5.6K	5%	1/16W
R1859	1-216-819-11	METAL CHIP	680	5%	1/16W
R1860	1-216-849-11	METAL CHIP	220K	5%	1/16W
R1900	1-216-857-11	METAL CHIP	1M	5%	1/16W
R1901	1-216-833-11	METAL CHIP	10K	5%	1/16W
R1903	1-216-833-11	METAL CHIP	10K	5%	1/16W
R1904	1-216-845-11	METAL CHIP	100K	5%	1/16W
R1905	1-218-889-11	METAL GLAZE	56K	0.50%	1/16W
R1907	1-216-844-11	METAL CHIP	82K	5%	1/16W
R1908	1-216-844-11	METAL CHIP	82K	5%	1/16W
R1909	1-216-842-11	METAL CHIP	56K	5%	1/16W
R1910	1-216-833-11	METAL CHIP	10K	5%	1/16W
R1911	1-216-829-11	METAL CHIP	4.7K	5%	1/16W
R1913	1-216-833-11	METAL CHIP	10K	5%	1/16W
R1914	1-216-833-11	METAL CHIP	10K	5%	1/16W
R1915	1-216-829-11	METAL CHIP	4.7K	5%	1/16W
R1916	1-216-837-11	METAL CHIP	22K	5%	1/16W
R1917	1-216-833-11	METAL CHIP	10K	5%	1/16W
R1918	1-216-841-11	METAL CHIP	47K	5%	1/16W
R1919	1-216-857-11	METAL CHIP	1M	5%	1/16W
R1920	1-216-857-11	METAL CHIP	1M	5%	1/16W
R1921	1-216-843-11	METAL CHIP	68K	5%	1/16W
R1922	1-216-837-11	METAL CHIP	22K	5%	1/16W
R1923	1-216-843-11	METAL CHIP	68K	5%	1/16W
R1924	1-216-841-11	METAL CHIP	47K	5%	1/16W
R1925	1-216-829-11	METAL CHIP	4.7K	5%	1/16W
R1926	1-216-833-11	METAL CHIP	10K	5%	1/16W
R1927	1-216-829-11	METAL CHIP	4.7K	5%	1/16W
R1928	1-216-833-11	METAL CHIP	10K	5%	1/16W

Ref. No.	Part No.	Description			Remarks
R1929	1-216-841-11	METAL CHIP	47K	5%	1/16W
R1930	1-216-839-11	METAL CHIP	33K	5%	1/16W
R1931	1-216-845-11	METAL CHIP	100K	5%	1/16W
R1932	1-216-842-11	METAL CHIP	56K	5%	1/16W
R1933	1-216-850-11	METAL CHIP	270K	5%	1/16W
R1934	1-218-883-11	METAL GLAZE	33K	0.50%	1/16W
R1935	1-218-879-11	METAL GLAZE	22K	0.50%	1/16W
R1936	1-216-841-11	METAL CHIP	47K	5%	1/16W
R1937	1-218-883-11	METAL GLAZE	33K	0.50%	1/16W
R1938	1-218-879-11	METAL GLAZE	22K	0.50%	1/16W
R1939	1-216-837-11	METAL CHIP	22K	5%	1/16W
R1941	1-216-813-11	METAL CHIP	220	5%	1/16W
R1942	1-216-864-11	METAL CHIP	0	5%	1/16W
R1947	1-216-817-11	METAL CHIP	470	5%	1/16W
R1951	1-216-833-11	METAL CHIP	10K	5%	1/16W
R1952	1-216-840-11	METAL CHIP	39K	5%	1/16W
R1953	1-216-833-11	METAL CHIP	10K	5%	1/16W
R1954	1-218-899-11	METAL GLAZE	150K	0.50%	1/16W
R1955	1-218-887-11	METAL GLAZE	47K	0.50%	1/16W
R1956	1-216-845-11	METAL CHIP	100K	5%	1/16W
R1957	1-218-887-11	METAL GLAZE	47K	0.50%	1/16W
R1958	1-216-841-11	METAL CHIP	47K	5%	1/16W
R1959	1-218-871-11	METAL GLAZE	10K	0.50%	1/16W
R1960	1-218-885-11	METAL GLAZE	39K	0.50%	1/16W
R1961	1-216-864-11	METAL CHIP	0	5%	1/16W
R1962	1-218-879-11	METAL GLAZE	22K	0.50%	1/16W
R1963	1-218-871-11	METAL GLAZE	10K	0.50%	1/16W
R1964	1-218-877-11	METAL GLAZE	18K	0.50%	1/16W
R1965	1-216-825-11	METAL CHIP	2.2K	5%	1/16W
R1966	1-216-825-11	METAL CHIP	2.2K	5%	1/16W
R1967	1-216-821-11	METAL CHIP	1K	5%	1/16W
R1968	1-218-863-11	METAL GLAZE	4.7K	0.50%	1/16W
R1970	1-216-851-11	METAL CHIP	330K	5%	1/16W
R1971	1-216-857-11	METAL CHIP	1M	5%	1/16W
R1972	1-216-853-11	METAL CHIP	470K	5%	1/16W
R1973	1-216-851-11	METAL CHIP	330K	5%	1/16W
R1974	1-216-817-11	METAL CHIP	470	5%	1/16W
R1975	1-216-841-11	METAL CHIP	47K	5%	1/16W
R1976	1-216-813-11	METAL CHIP	220	5%	1/16W
R1977	1-216-055-00	METAL CHIP	1.8K	5%	1/10W
R1978	1-216-055-00	METAL CHIP	1.8K	5%	1/10W
R1979	1-216-810-11	METAL CHIP	120	5%	1/16W
R1980	1-216-837-11	METAL CHIP	22K	5%	1/16W
R1981	1-216-817-11	METAL CHIP	470	5%	1/16W
R1985	1-216-864-11	METAL CHIP	0	5%	1/16W
R1990	1-216-822-11	METAL CHIP	1.2K	5%	1/16W
R1991	1-216-823-11	METAL CHIP	1.5K	5%	1/16W
R1992	1-216-827-11	METAL CHIP	3.3K	5%	1/16W
R1993	1-216-831-11	METAL CHIP	6.8K	5%	1/16W

< SWITCH >

S1901	1-572-467-21	SWITCH, PUSH (MIRROR)(1 KEY)
S1991	1-762-333-21	SWITCH, TACTILE (PROGRAM AE)
S1992	1-771-029-21	SWITCH, TACTILE (VOLUME –)
S1993	1-771-029-21	SWITCH, TACTILE (VOLUME +)
S1994	1-771-029-21	SWITCH, TACTILE (BRIGHT –)
S1995	1-771-029-21	SWITCH, TACTILE (BRIGHT +)

< TRANSFORMER >

T1951	1-431-291-11	TRANSFORMER, DC-DC CONVERTER
T1952	1-429-507-31	TRANSFORMER, INVERTER

Ref. No.	Part No.	Description			Remarks

< VIBRATOR >

X1801	1-579-466-11	VIBRATOR, CRYSTAL 4.43MHz

[redacted]

	A-7093-274-A	SD-24 BOARD, COMPLETE (TRV24E)
		**********

(Ref.No.8,000 Series)

< CAPACITOR >

C805	1-135-259-11	TANTAL. CHIP	10uF	20%	6.3V
C808	1-104-752-11	TANTAL. CHIP	33uF	20%	6.3V
C809	1-162-969-11	CERAMIC CHIP	0.0068uF	10%	25V
C811	1-162-970-11	CERAMIC CHIP	0.01uF	10%	25V
C812	1-104-912-11	TANTAL. CHIP	3.3uF	20%	6.3V
C813	1-135-333-11	TANTAL. CHIP	1uF	20%	16V
C814	1-162-970-11	CERAMIC CHIP	0.01uF	10%	25V
C816	1-162-963-11	CERAMIC CHIP	680PF	10%	50V
C818	1-107-826-11	CERAMIC CHIP	0.1uF	10%	16V
C820	1-162-970-11	CERAMIC CHIP	0.01uF	10%	25V
C822	1-165-176-11	CERAMIC CHIP	0.047uF	10%	16V
C823	1-162-970-11	CERAMIC CHIP	0.01uF	10%	25V
C825	1-164-360-11	CERAMIC CHIP	0.1uF		16V
C826	1-162-970-11	CERAMIC CHIP	0.01uF	10%	25V
C827	1-162-970-11	CERAMIC CHIP	0.01uF	10%	25V
C828	1-164-360-11	CERAMIC CHIP	0.1uF		16V
C829	1-107-826-11	CERAMIC CHIP	0.1uF	10%	16V
C832	1-162-926-11	CERAMIC CHIP	82PF	5%	50V
C835	1-164-004-11	CERAMIC CHIP	0.1uF	10%	25V
C836	1-164-004-11	CERAMIC CHIP	0.1uF	10%	25V
C837	1-164-004-11	CERAMIC CHIP	0.1uF	10%	25V
C838	1-162-970-11	CERAMIC CHIP	0.01uF	10%	25V
C839	1-162-970-11	CERAMIC CHIP	0.01uF	10%	25V
C840	1-162-970-11	CERAMIC CHIP	0.01uF	10%	25V
C841	1-107-682-11	CERAMIC CHIP	1uF	10%	16V
C843	1-104-852-11	TANTAL. CHIP	22uF	20%	10V
C844	1-162-970-11	CERAMIC CHIP	0.01uF	10%	25V
C846	1-164-217-11	CERAMIC CHIP	150PF	5%	50V
C900	1-162-970-11	CERAMIC CHIP	0.01uF	10%	25V

< CONNECTOR >

CN801	1-770-627-21	PIN, CONNECTOR 10P
CN806	1-766-346-21	CONNECTOR, FFC/FPC 16P
CN808	1-573-360-21	CONNECTOR, FFC/FPC 20P

< IC >

IC801	8-752-067-59	IC CXA1785R-T4
IC802	8-759-355-92	IC AK9813AF-E2
IC900	8-759-457-42	IC BU9728KV-E2

< COIL >

L803	1-414-755-11	INDUCTOR 22uH
L804	1-412-956-21	INDUCTOR 27uH
L805	1-414-754-11	INDUCTOR 10uH

< TRANSISTOR >

Q802	8-729-420-24	TRANSISTOR 2SB1218A-QRS
Q805	8-729-230-63	TRANSISTOR 2SC4116-YG

Ref. No.	Part No.	Description			Remarks
		< RESISTOR >			
R803	1-216-818-11	METAL CHIP	560	5%	1/16W
R813	1-216-818-11	METAL CHIP	560	5%	1/16W
R814	1-216-837-11	METAL CHIP	22K	5%	1/16W
R815	1-216-841-11	METAL CHIP	47K	5%	1/16W
R816	1-218-877-11	METAL GLAZE	18K	0.50%	1/16W
R817	1-216-842-11	METAL CHIP	56K	5%	1/16W
R818	1-216-851-11	METAL CHIP	330K	5%	1/16W
R819	1-216-841-11	METAL CHIP	47K	5%	1/16W
R820	1-216-840-11	METAL CHIP	39K	5%	1/16W
R821	1-216-821-11	METAL CHIP	1K	5%	1/16W
R824	1-216-821-11	METAL CHIP	1K	5%	1/16W
R827	1-219-570-11	METAL GLAZE	10M	5%	1/16W
R828	1-216-843-11	METAL CHIP	68K	5%	1/16W
R829	1-216-841-11	METAL CHIP	47K	5%	1/16W
R830	1-216-840-11	METAL CHIP	39K	5%	1/16W
R831	1-216-839-11	METAL CHIP	33K	5%	1/16W
R832	1-216-839-11	METAL CHIP	33K	5%	1/16W
R833	1-216-837-11	METAL CHIP	22K	5%	1/16W
R834	1-216-837-11	METAL CHIP	22K	5%	1/16W
R835	1-216-842-11	METAL CHIP	56K	5%	1/16W
R836	1-216-841-11	METAL CHIP	47K	5%	1/16W
R837	1-216-839-11	METAL CHIP	33K	5%	1/16W
R838	1-216-857-11	METAL CHIP	1M	5%	1/16W
R839	1-216-841-11	METAL CHIP	47K	5%	1/16W
R840	1-216-841-11	METAL CHIP	47K	5%	1/16W
R841	1-216-827-11	METAL CHIP	3.3K	5%	1/16W
R842	1-216-864-11	METAL CHIP	0	5%	1/16W
R843	1-216-837-11	METAL CHIP	22K	5%	1/16W
R844	1-216-837-11	METAL CHIP	22K	5%	1/16W
R845	1-216-819-11	METAL CHIP	680	5%	1/16W
R847	1-216-831-11	METAL CHIP	6.8K	5%	1/16W
R848	1-216-841-11	METAL CHIP	47K	5%	1/16W
R849	1-216-841-11	METAL CHIP	47K	5%	1/16W
R850	1-216-829-11	METAL CHIP	4.7K	5%	1/16W
R851	1-216-837-11	METAL CHIP	22K	5%	1/16W
R854	1-216-864-11	METAL CHIP	0	5%	1/16W
R855	1-216-809-11	METAL CHIP	100	5%	1/16W
R856	1-216-809-11	METAL CHIP	100	5%	1/16W
R857	1-216-830-11	METAL CHIP	5.6K	5%	1/16W
R858	1-216-832-11	METAL CHIP	8.2K	5%	1/16W
R859	1-216-830-11	METAL CHIP	5.6K	5%	1/16W
R862	1-216-864-11	METAL CHIP	0	5%	1/16W
R863	1-216-819-11	METAL CHIP	680	5%	1/16W
R864	1-216-849-11	METAL CHIP	220K	5%	1/16W
R865	1-216-817-11	METAL CHIP	470	5%	1/16W
R900	1-216-853-11	METAL CHIP	470K	5%	1/16W
		< SWITCH >			
S991	1-762-333-21	SWITCH, TACTILE (PROGRAM AE)			
		< VIBRATOR >			
X801	1-579-661-21	OSCILLATOR, CRYSTAL			

Ref. No.	Part No.	Description			Remarks
	A-7093-271-A	SD-25 BOARD, COMPLETE (TRV14E)			
		**********			
					(Ref.No.8,000 Series)
		< CAPACITOR >			
C1804	1-109-982-11	CERAMIC CHIP	1uF	10%	10V
C1805	1-162-963-11	CERAMIC CHIP	680PF	10%	50V
C1806	1-135-259-11	TANTAL. CHIP	10uF	20%	6.3V
C1808	1-104-752-11	TANTAL. CHIP	33uF	20%	6.3V
C1810	1-162-970-11	CERAMIC CHIP	0.01uF	10%	25V
C1811	1-162-969-11	CERAMIC CHIP	0.0068uF	10%	25V
C1812	1-104-912-11	TANTAL. CHIP	3.3uF	20%	6.3V
C1813	1-162-970-11	CERAMIC CHIP	0.01uF	10%	25V
C1818	1-162-963-11	CERAMIC CHIP	680PF	10%	50V
C1820	1-164-360-11	CERAMIC CHIP	0.1uF		16V
C1821	1-162-970-11	CERAMIC CHIP	0.01uF	10%	25V
C1822	1-107-826-11	CERAMIC CHIP	0.1uF	10%	16V
C1823	1-165-176-11	CERAMIC CHIP	0.047uF	10%	16V
C1824	1-164-360-11	CERAMIC CHIP	0.1uF		16V
C1825	1-162-970-11	CERAMIC CHIP	0.01uF	10%	25V
C1826	1-107-826-11	CERAMIC CHIP	0.1uF	10%	16V
C1828	1-162-970-11	CERAMIC CHIP	0.01uF	10%	25V
C1829	1-162-970-11	CERAMIC CHIP	0.01uF	10%	25V
C1830	1-162-922-11	CERAMIC CHIP	39PF	5%	50V
C1831	1-162-913-11	CERAMIC CHIP	8PF	0.5PF	50V
C1832	1-162-970-11	CERAMIC CHIP	0.01uF	10%	25V
C1833	1-104-851-11	TANTAL. CHIP	10uF	20%	10V
C1834	1-107-682-11	CERAMIC CHIP	1uF	10%	16V
C1835	1-162-970-11	CERAMIC CHIP	0.01uF	10%	25V
C1836	1-110-501-11	CERAMIC CHIP	0.33uF	10%	16V
C1837	1-110-501-11	CERAMIC CHIP	0.33uF	10%	16V
C1838	1-110-501-11	CERAMIC CHIP	0.33uF	10%	16V
C1846	1-164-217-11	CERAMIC CHIP	150PF	5%	50V
C1900	1-162-970-11	CERAMIC CHIP	0.01uF	10%	25V
		< CONNECTOR >			
CN1801	1-770-627-21	PIN, CONNECTOR 10P			
CN1806	1-766-346-21	CONNECTOR, FFC/FPC 16P			
CN1808	1-573-360-21	CONNECTOR, FFC/FPC 20P			
		< DIODE >			
D1801	8-713-102-80	DIODE 1T369-01-T8A			
		< IC >			
IC1801	8-759-450-52	IC IR3Y29B4			
IC1802	8-759-355-92	IC AK9813AF-E2			
IC1900	8-759-073-95	IC SED1510FOC-T4			
		< COIL >			
L1803	1-414-755-11	INDUCTOR 22uH			
L1804	1-412-956-21	INDUCTOR 27uH			
L1805	1-414-754-11	INDUCTOR 10uH			
		< TRANSISTOR >			
Q1802	8-729-420-24	TRANSISTOR 2SB1218A-QRS			
Q1803	8-729-230-63	TRANSISTOR 2SC4116-YG			
Q1805	8-729-230-63	TRANSISTOR 2SC4116-YG			

Ref. No.	Part No.	Description			Remarks
		< RESISTOR >			
R1815	1-216-818-11	METAL CHIP	560	5%	1/16W
R1817	1-216-818-11	METAL CHIP	560	5%	1/16W
R1818	1-216-838-11	METAL CHIP	27K	5%	1/16W
R1819	1-216-841-11	METAL CHIP	47K	5%	1/16W
R1820	1-218-877-11	METAL GLAZE	18K	0.50%	1/16W
R1821	1-216-851-11	METAL CHIP	330K	5%	1/16W
R1823	1-216-833-11	METAL CHIP	10K	5%	1/16W
R1824	1-216-837-11	METAL CHIP	22K	5%	1/16W
R1826	1-216-839-11	METAL CHIP	33K	5%	1/16W
R1827	1-216-841-11	METAL CHIP	47K	5%	1/16W
R1829	1-216-841-11	METAL CHIP	47K	5%	1/16W
R1831	1-219-570-11	METAL GLAZE	10M	5%	1/16W
R1832	1-216-840-11	METAL CHIP	39K	5%	1/16W
R1833	1-216-837-11	METAL CHIP	22K	5%	1/16W
R1835	1-216-840-11	METAL CHIP	39K	5%	1/16W
R1836	1-216-837-11	METAL CHIP	22K	5%	1/16W
R1837	1-216-837-11	METAL CHIP	22K	5%	1/16W
R1838	1-216-839-11	METAL CHIP	33K	5%	1/16W
R1840	1-216-857-11	METAL CHIP	1M	5%	1/16W
R1841	1-216-837-11	METAL CHIP	22K	5%	1/16W
R1842	1-216-837-11	METAL CHIP	22K	5%	1/16W
R1843	1-216-839-11	METAL CHIP	33K	5%	1/16W
R1845	1-216-841-11	METAL CHIP	47K	5%	1/16W
R1846	1-216-836-11	METAL CHIP	18K	5%	1/16W
R1847	1-216-839-11	METAL CHIP	33K	5%	1/16W
R1848	1-216-819-11	METAL CHIP	680	5%	1/16W
R1849	1-216-830-11	METAL CHIP	5.6K	5%	1/16W
R1850	1-216-829-11	METAL CHIP	4.7K	5%	1/16W
R1851	1-216-809-11	METAL CHIP	100	5%	1/16W
R1852	1-216-809-11	METAL CHIP	100	5%	1/16W
R1853	1-216-809-11	METAL CHIP	100	5%	1/16W
R1855	1-216-832-11	METAL CHIP	8.2K	5%	1/16W
R1857	1-216-864-11	METAL CHIP	0	5%	1/16W
R1858	1-216-830-11	METAL CHIP	5.6K	5%	1/16W
R1859	1-216-818-11	METAL CHIP	560	5%	1/16W
R1860	1-216-817-11	METAL CHIP	470	5%	1/16W
R1863	1-216-819-11	METAL CHIP	680	5%	1/16W
R1864	1-216-849-11	METAL CHIP	220K	5%	1/16W
		< SWITCH >			
S1991	1-762-333-21	SWITCH, TACTILE (PROGRAM AE)			
		< VIBRATOR >			
X1801	1-579-661-21	OSCILLATOR, CRYSTAL 4.43MHz			
	A-7073-145-A	SE-60 BOARD, COMPLETE			
		**********			
		(EXCEPT TRV14E/TRV53)			
		(Ref.No.5,000 Series)			
		< CAPACITOR >			
C650	1-164-004-11	CERAMIC CHIP	0.1uF	10%	25V
C651	1-164-004-11	CERAMIC CHIP	0.1uF	10%	25V
C652	1-104-908-11	TANTAL. CHIP	47uF	20%	4V
C653	1-104-908-11	TANTAL. CHIP	47uF	20%	4V
C654	1-135-259-11	TANTAL. CHIP	10uF	20%	6.3V
C655	1-164-156-11	CERAMIC CHIP	0.1uF		25V
C656	1-164-299-11	CERAMIC CHIP	0.22uF	10%	25V
C657	1-164-299-11	CERAMIC CHIP	0.22uF	10%	25V
C658	1-164-245-11	CERAMIC CHIP	0.015uF	10%	25V
C659	1-164-245-11	CERAMIC CHIP	0.015uF	10%	25V
C660	1-128-257-21	ELECT CHIP	33uF	20%	10V
C661	1-128-257-21	ELECT CHIP	33uF	20%	10V
C663	1-162-927-11	CERAMIC CHIP	100PF	5%	50V
C664	1-162-927-11	CERAMIC CHIP	100PF	5%	50V
C665	1-110-501-11	CERAMIC CHIP	0.33uF	10%	16V
C666	1-110-501-11	CERAMIC CHIP	0.33uF	10%	16V
C667	1-162-970-11	CERAMIC CHIP	0.01uF	10%	25V
C668	1-135-259-11	TANTAL. CHIP	10uF	20%	6.3V
		< CONNECTOR >			
CN650	1-764-516-21	CONNECTOR, FFC/FPC (ZIF) 6P			
		< IC >			
IC650	8-759-080-34	IC TA75W01FU-TE12R			
IC651	8-759-388-62	IC NJU7062M(TE2)			
IC652	8-759-391-88	IC MC14066BDTR2			
		< COIL >			
L601	1-414-754-11	INDUCTOR 10uH			
		< TRANSISTOR >			
Q650	8-729-402-42	TRANSISTOR UN5213			
		< RESISTOR >			
R650	1-216-837-11	METAL CHIP	22K	5%	1/16W
R651	1-216-837-11	METAL CHIP	22K	5%	1/16W
R652	1-216-837-11	METAL CHIP	22K	5%	1/16W
R653	1-216-837-11	METAL CHIP	22K	5%	1/16W
R654	1-216-837-11	METAL CHIP	22K	5%	1/16W
R655	1-216-837-11	METAL CHIP	22K	5%	1/16W
R656	1-216-803-11	METAL CHIP	33	5%	1/16W
R658	1-216-833-11	METAL CHIP	10K	5%	1/16W
R659	1-216-833-11	METAL CHIP	10K	5%	1/16W
R660	1-218-911-11	METAL GLAZE	470K	0.50%	1/16W
R661	1-218-911-11	METAL GLAZE	470K	0.50%	1/16W
R664	1-216-833-11	METAL CHIP	10K	5%	1/16W
R665	1-216-857-11	METAL CHIP	1M	5%	1/16W
R666	1-216-857-11	METAL CHIP	1M	5%	1/16W
R667	1-216-833-11	METAL CHIP	10K	5%	1/16W
R668	1-216-835-11	METAL CHIP	15K	5%	1/16W
R669	1-216-835-11	METAL CHIP	15K	5%	1/16W
R670	1-216-845-11	METAL CHIP	100K	5%	1/16W
		< SENSOR >			
SE650	1-810-725-81	SENSOR, ANGULAR VELOCITY			
SE651	1-810-725-71	SENSOR, ANGULAR VELOCITY			

VC-188

Ref. No.	Part No.	Description	Remarks
	A-7093-273-A	VC-188 BOARD, COMPLETE (TRV34/TRV44)	
		**********	
	A-7093-275-A	VC-188 BOARD, COMPLETE (TRV32/TRV312)	
		**********	
	A-7093-282-A	VC-188 BOARD, COMPLETE (TRV52/TRV512)	
		**********	
	A-7093-268-A	VC-188 BOARD, COMPLETE (TRV14E)	
		**********	
	A-7093-280-A	VC-188 BOARD, COMPLETE (TRV44E)	
		**********	
	A-7093-272-A	VC-188 BOARD, COMPLETE (TRV24E)	
		**********	
	A-7093-283-A	VC-188 BOARD, COMPLETE (TRV53)	
		**********	
			(Ref.No.1,000 Series)
		< CAPACITOR >	
C101	1-162-915-11	CERAMIC CHIP 10PF 0.5PF 50V	
			(TRV32/TRV34/TRV44/TRV52/TRV53/TRV312/TRV512)
C102	1-162-915-11	CERAMIC CHIP 10PF 0.5PF 50V	
			(TRV32/TRV34/TRV44/TRV52/TRV53/TRV312/TRV512)
C103	1-162-915-11	CERAMIC CHIP 10PF 0.5PF 50V	
C104	1-162-915-11	CERAMIC CHIP 10PF 0.5PF 50V	
C105	1-162-970-11	CERAMIC CHIP 0.01uF 10% 25V	
			(TRV32/TRV34/TRV44/TRV52/TRV53/TRV312/TRV512)
C106	1-162-970-11	CERAMIC CHIP 0.01uF 10% 25V	
			(TRV32/TRV34/TRV44/TRV52/TRV53/TRV312/TRV512)
C107	1-162-970-11	CERAMIC CHIP 0.01uF 10% 25V	
C108	1-162-970-11	CERAMIC CHIP 0.01uF 10% 25V	
C109	1-110-569-11	TANTAL. CHIP 47uF 20% 6.3V	
C110	1-162-927-11	CERAMIC CHIP 100PF 5% 50V	
C111	1-164-217-11	CERAMIC CHIP 150PF 5% 50V	
C112	1-162-926-11	CERAMIC CHIP 82PF 5% 50V	
C113	1-162-927-11	CERAMIC CHIP 100PF 5% 50V	
C114	1-162-970-11	CERAMIC CHIP 0.01uF 10% 25V	
C115	1-162-970-11	CERAMIC CHIP 0.01uF 10% 25V	
			(TRV32/TRV34/TRV44/TRV52/TRV53/TRV312/TRV512)
C116	1-162-970-11	CERAMIC CHIP 0.01uF 10% 25V	
			(TRV32/TRV34/TRV44/TRV52/TRV53/TRV312/TRV512)
C117	1-162-970-11	CERAMIC CHIP 0.01uF 10% 25V	
C118	1-162-970-11	CERAMIC CHIP 0.01uF 10% 25V	
C119	1-164-156-11	CERAMIC CHIP 0.1uF 25V	
C120	1-162-970-11	CERAMIC CHIP 0.01uF 10% 25V	
C121	1-162-970-11	CERAMIC CHIP 0.01uF 10% 25V	
C122	1-162-970-11	CERAMIC CHIP 0.01uF 10% 25V	
C123	1-164-227-11	CERAMIC CHIP 0.022uF 10% 25V	
C124	1-164-227-11	CERAMIC CHIP 0.022uF 10% 25V	
C125	1-162-970-11	CERAMIC CHIP 0.01uF 10% 25V	
			(TRV32/TRV34/TRV44/TRV52/TRV53/TRV312/TRV512)
C126	1-162-970-11	CERAMIC CHIP 0.01uF 10% 25V	
			(TRV32/TRV34/TRV44/TRV52/TRV53/TRV312/TRV512)
C127	1-162-970-11	CERAMIC CHIP 0.01uF 10% 25V	
C128	1-135-259-11	TANTAL. CHIP 10uF 20% 6.3V	
C129	1-162-970-11	CERAMIC CHIP 0.01uF 10% 25V	
			(TRV32/TRV34/TRV44/TRV52/TRV53/TRV312/TRV512)
C130	1-162-970-11	CERAMIC CHIP 0.01uF 10% 25V	
C131	1-162-970-11	CERAMIC CHIP 0.01uF 10% 25V	
C132	1-164-227-11	CERAMIC CHIP 0.022uF 10% 25V	
C133	1-164-227-11	CERAMIC CHIP 0.022uF 10% 25V	
C134	1-162-970-11	CERAMIC CHIP 0.01uF 10% 25V	
C136	1-135-259-11	TANTAL. CHIP 10uF 20% 6.3V	

Ref. No.	Part No.	Description	Remarks
C138	1-162-970-11	CERAMIC CHIP 0.01uF 10% 25V	
C139	1-162-961-11	CERAMIC CHIP 330PF 10% 50V	
C140	1-162-970-11	CERAMIC CHIP 0.01uF 10% 25V	
C141	1-162-970-11	CERAMIC CHIP 0.01uF 10% 25V	
C142	1-162-970-11	CERAMIC CHIP 0.01uF 10% 25V	
C143	1-162-970-11	CERAMIC CHIP 0.01uF 10% 25V	
C144	1-162-970-11	CERAMIC CHIP 0.01uF 10% 25V	
C145	1-162-970-11	CERAMIC CHIP 0.01uF 10% 25V	
C146	1-162-970-11	CERAMIC CHIP 0.01uF 10% 25V	
C147	1-135-259-11	TANTAL. CHIP 10uF 20% 6.3V	
C148	1-162-970-11	CERAMIC CHIP 0.01uF 10% 25V	
C149	1-162-970-11	CERAMIC CHIP 0.01uF 10% 25V	
C150	1-162-968-11	CERAMIC CHIP 0.0047uF 10% 50V	
C151	1-162-970-11	CERAMIC CHIP 0.01uF 10% 25V	
C152	1-162-970-11	CERAMIC CHIP 0.01uF 10% 25V	
C155	1-162-970-11	CERAMIC CHIP 0.01uF 10% 25V	
C156	1-162-970-11	CERAMIC CHIP 0.01uF 10% 25V	
C157	1-107-826-11	CERAMIC CHIP 0.1uF 10% 16V	
C158	1-162-970-11	CERAMIC CHIP 0.01uF 10% 25V	
C159	1-162-970-11	CERAMIC CHIP 0.01uF 10% 25V	
C160	1-162-958-11	CERAMIC CHIP 270PF 5% 50V	
C161	1-162-922-11	CERAMIC CHIP 39PF 5% 50V	
C162	1-162-912-11	CERAMIC CHIP 7PF 0.5PF 50V	
			(TRV14E/TRV24E)
C162	1-162-917-11	CERAMIC CHIP 15PF 5% 50V	
			(EXCEPT TRV14E/TRV24E)
C164	1-162-918-11	CERAMIC CHIP 18PF 5% 50V	
C165	1-162-958-11	CERAMIC CHIP 270PF 5% 50V	
C166	1-162-918-11	CERAMIC CHIP 18PF 5% 50V	
C167	1-162-966-11	CERAMIC CHIP 0.0022uF 10% 50V	
C168	1-162-926-11	CERAMIC CHIP 82PF 5% 50V	
			(TRV34/TRV44/TRV52/TRV512/TRV44E)
C168	1-162-927-11	CERAMIC CHIP 100PF 5% 50V	
			(TRV32/TRV53/TRV312/TRV14E/TRV24E)
C169	1-162-923-11	CERAMIC CHIP 47PF 5% 50V	
C170	1-162-958-11	CERAMIC CHIP 270PF 5% 50V	
C171	1-162-970-11	CERAMIC CHIP 0.01uF 10% 25V	
C172	1-164-227-11	CERAMIC CHIP 0.022uF 10% 25V	
C173	1-162-970-11	CERAMIC CHIP 0.01uF 10% 25V	
C174	1-162-919-11	CERAMIC CHIP 22PF 5% 50V	
C176	1-164-227-11	CERAMIC CHIP 0.022uF 10% 25V	
C177	1-162-970-11	CERAMIC CHIP 0.01uF 10% 25V	
C178	1-162-970-11	CERAMIC CHIP 0.01uF 10% 25V	
C179	1-164-237-11	CERAMIC CHIP 16PF 5% 50V	
C180	1-164-227-11	CERAMIC CHIP 0.022uF 10% 25V	
C181	1-162-921-11	CERAMIC CHIP 33PF 5% 50V	
C182	1-109-982-11	CERAMIC CHIP 1uF 10% 10V	
C202	1-135-259-11	TANTAL. CHIP 10uF 20% 6.3V	
C203	1-165-176-11	CERAMIC CHIP 0.047uF 10% 16V	
			(TRV14E)
C204	1-164-156-11	CERAMIC CHIP 0.1uF 25V	
C205	1-109-982-11	CERAMIC CHIP 1uF 10% 10V	
C206	1-109-982-11	CERAMIC CHIP 1uF 10% 10V	
C207	1-162-970-11	CERAMIC CHIP 0.01uF 10% 25V	
C208	1-164-005-11	CERAMIC CHIP 0.47uF 25V	
C209	1-109-982-11	CERAMIC CHIP 1uF 10% 10V	
C210	1-135-259-11	TANTAL. CHIP 10uF 20% 6.3V	
C211	1-162-970-11	CERAMIC CHIP 0.01uF 10% 25V	
C212	1-164-005-11	CERAMIC CHIP 0.47uF 25V	
C213	1-104-852-11	TANTAL. CHIP 22uF 20% 6.3V	
C214	1-162-970-11	CERAMIC CHIP 0.01uF 10% 25V	
C215	1-164-005-11	CERAMIC CHIP 0.47uF 25V	
C216	1-126-246-11	ELECT CHIP 220uF 20% 4V	
C217	1-135-149-21	TANTALUM CHIP 2.2uF 20% 10V	
C218	1-162-927-11	CERAMIC CHIP 100PF 5% 50V	

Ref. No.	Part No.	Description			Remarks
C219	1-135-259-11	TANTAL. CHIP	10uF	20%	6.3V
C220	1-162-913-11	CERAMIC CHIP	8PF	0.5PF	50V
		(TRV34/TRV44/TRV52/TRV53/TRV512)			
C220	1-162-912-11	CERAMIC CHIP	7PF	0.5PF	50V
		(TRV32/TRV312/TRV14E/TRV24E/TRV44E)			
C221	1-164-156-11	CERAMIC CHIP	0.1uF		25V
		(TRV14E/TRV24E/TRV44E)			
C223	1-164-156-11	CERAMIC CHIP	0.1uF		25V
C224	1-164-005-11	CERAMIC CHIP	0.47uF		25V
C225	1-162-928-11	CERAMIC CHIP	120PF	5%	50V
		(TRV14E/TRV24E/TRV44E)			
C225	1-164-218-11	CERAMIC CHIP	180PF	0.25PF	50V
		(TRV32/TRV34/TRV44/TRV52/TRV53/TRV312/TR			
C226	1-162-957-11	CERAMIC CHIP	220PF	5%	50V
		(TRV14E/TRV24E/TRV44E)			
C227	1-135-259-11	TANTAL. CHIP	10uF	20%	6.3V
C228	1-165-176-11	CERAMIC CHIP	0.047uF	10%	16V
		(TRV24E/TRV44E)			
C229	1-162-959-11	CERAMIC CHIP	330PF	5%	50V
C230	1-164-392-11	CERAMIC CHIP	390PF	5%	50V
C231	1-135-259-11	TANTAL. CHIP	10uF	20%	6.3V
C232	1-164-156-11	CERAMIC CHIP	0.1uF		25V
C233	1-165-176-11	CERAMIC CHIP	0.047uF	10%	16V
C234	1-135-181-21	TANTALUM CHIP	4.7uF	20%	6.3V
		(TRV14E/TRV24E)			
C234	1-135-149-21	TANTALUM CHIP	2.2uF	20%	10V
		(TRV34/TRV44/TRV52/TRV53/TRV512/TRV44E)			
C234	1-109-935-11	TANTAL. CHIP	4.7uF	20%	6.3V
		(TRV32/TRV312)			
C235	1-165-176-11	CERAMIC CHIP	0.047uF	10%	16V
C236	1-135-091-00	TANTALUM CHIP	1uF	20%	16V
C237	1-162-966-11	CERAMIC CHIP	0.0022uF	10%	50V
		(TRV14E/TRV24E/TRV44E)			
C237	1-162-960-11	CERAMIC CHIP	220PF	10%	50V
		(TRV52/TRV53/TRV512)			
C237	1-162-957-11	CERAMIC CHIP	220PF	5%	50V
		(TRV32/TRV34/TRV44/TRV312)			
C238	1-104-912-11	TANTAL. CHIP	3.3uF	20%	6.3V
		(TRV14E/TRV24E/TRV44E)			
C238	1-135-149-21	TANTALUM CHIP	2.2uF	20%	10V
		(TRV32/TRV34/TRV44/TRV52/TRV53/TRV312/TRV512)			
C240	1-109-982-11	CERAMIC CHIP	1uF	10%	10V
C242	1-104-752-11	TANTAL. CHIP	33uF	20%	6.3V
C243	1-162-916-11	CERAMIC CHIP	12PF	5%	50V
		(TRV14E/TRV24E/TRV44E)			
C243	1-162-925-11	CERAMIC CHIP	68PF	5%	50V
		(TRV32/TRV34/TRV44/TRV52/TRV53/TRV312/TRV512)			
C244	1-162-970-11	CERAMIC CHIP	0.01uF	10%	25V
		(TRV14E/TRV24E/TRV44E)			
C244	1-164-315-11	CERAMIC CHIP	470PF	5%	50V
		(TRV32/TRV34/TRV44/TRV52/TRV53/TRV312/TRV512)			
C245	1-162-912-11	CERAMIC CHIP	7PF	0.5PF	50V
		(TRV14E/TRV24E/TRV44E)			
C245	1-162-917-11	CERAMIC CHIP	15PF	5%	50V
		(TRV32/TRV34/TRV44/TRV52/TRV53/TRV312/TRV512)			
C246	1-135-073-00	TANTALUM CHIP	0.33uF	10%	35V
C247	1-162-927-11	CERAMIC CHIP	100PF	5%	50V
		(TRV14E/TRV24E/TRV44E)			
C248	1-162-923-11	CERAMIC CHIP	47PF	5%	50V
		(TRV14E/TRV24E/TRV44E)			
C249	1-162-970-11	CERAMIC CHIP	0.01uF	10%	25V
C254	1-164-237-11	CERAMIC CHIP	16PF	5%	50V
		(TRV14E/TRV24E/TRV44E)			
C254	1-162-975-11	CERAMIC CHIP	24PF	5%	50V
		(TRV32/TRV34/TRV44/TRV52/TRV53/TRV312/TRV512)			
C256	1-165-112-11	CERAMIC CHIP	0.33uF		16V
C257	1-164-156-11	CERAMIC CHIP	0.1uF		25V
C259	1-162-927-11	CERAMIC CHIP	100PF	5%	50V
		(TRV32/TRV34/TRV44/TRV52/TRV53/TRV312/TRV512)			
C263	1-162-920-11	CERAMIC CHIP	27PF	5%	50V
					(TRV14E)
C265	1-162-926-11	CERAMIC CHIP	82PF	5%	50V
					(TRV14E)
C266	1-162-970-11	CERAMIC CHIP	0.01uF	10%	25V
					(TRV14E)
C267	1-162-912-11	CERAMIC CHIP	7PF	0.5PF	50V
					(TRV14E/TRV24E/TRV44E)
C267	1-162-917-11	CERAMIC CHIP	15PF	5%	50V
		(TRV32/TRV34/TRV44/TRV52/TRV53/TRV312/TRV512)			
C268	1-162-913-11	CERAMIC CHIP	8PF	0.5PF	50V
		(TRV34/TRV44/TRV52/TRV53/TRV512)			
C268	1-162-912-11	CERAMIC CHIP	7PF	0.5PF	50V
		(TRV32/TRV312/TRV14E/TRV24E/TRV44E)			
C269	1-162-921-11	CERAMIC CHIP	33PF	5%	50V
		(TRV14E/TRV24E/TRV44E)			
C270	1-164-004-11	CERAMIC CHIP	0.1uF	10%	25V
C271	1-164-156-11	CERAMIC CHIP	0.1uF		25V
C274	1-135-259-11	TANTAL. CHIP	10uF	20%	6.3V
		(TRV52/TRV53/TRV512)			
C276	1-162-970-11	CERAMIC CHIP	0.01uF	10%	25V
C277	1-107-682-11	CERAMIC CHIP	1uF	10%	16V
C278	1-135-181-21	TANTALUM CHIP	4.7uF	20%	6.3V
					(TRV14E/TRV24E)
C278	1-109-935-11	TANTAL. CHIP	4.7uF	20%	6.3V
					(TEXCEPT TRV14E/TRV24E)
C279	1-162-970-11	CERAMIC CHIP	0.01uF	10%	25V
C280	1-162-970-11	CERAMIC CHIP	0.01uF	10%	25V
C302	1-107-682-11	CERAMIC CHIP	1uF	10%	16V
C303	1-115-156-11	CERAMIC CHIP	1uF		10V
C304	1-162-964-11	CERAMIC CHIP	0.001uF	10%	50V
C305	1-107-682-11	CERAMIC CHIP	1uF	10%	16V
C307	1-162-970-11	CERAMIC CHIP	0.01uF	10%	25V
C309	1-135-091-00	TANTALUM CHIP	1uF	20%	16V
C400	1-162-970-11	CERAMIC CHIP	0.01uF	10%	25V
C401	1-162-913-11	CERAMIC CHIP	8PF	0.5PF	50V
C402	1-162-964-11	CERAMIC CHIP	0.001uF	10%	50V
C403	1-162-912-11	CERAMIC CHIP	7PF	0.5PF	50V
C404	1-107-682-11	CERAMIC CHIP	1uF	10%	16V
C405	1-162-907-11	CERAMIC CHIP	2PF	0.25PF	50V
C406	1-115-156-11	CERAMIC CHIP	1uF		10V
C407	1-162-968-11	CERAMIC CHIP	0.0047uF	10%	50V
C408	1-162-968-11	CERAMIC CHIP	0.0047uF	10%	50V
C409	1-162-964-11	CERAMIC CHIP	0.001uF	10%	50V
					(TRV14E/TRV24E/TRV44E)
C411	1-162-970-11	CERAMIC CHIP	0.01uF	10%	25V
C412	1-162-970-11	CERAMIC CHIP	0.01uF	10%	25V
C413	1-162-964-11	CERAMIC CHIP	0.001uF	10%	50V
					(TRV14E/TRV24E/TRV44E)
C414	1-162-968-11	CERAMIC CHIP	0.0047uF	10%	50V
C415	1-162-968-11	CERAMIC CHIP	0.0047uF	10%	50V
C416	1-162-970-11	CERAMIC CHIP	0.01uF	10%	25V
C417	1-162-957-11	CERAMIC CHIP	220PF	5%	50V
C418	1-162-957-11	CERAMIC CHIP	220PF	5%	50V
C419	1-162-970-11	CERAMIC CHIP	0.01uF	10%	25V
C420	1-162-970-11	CERAMIC CHIP	0.01uF	10%	25V
C421	1-162-970-11	CERAMIC CHIP	0.01uF	10%	25V
C423	1-162-968-11	CERAMIC CHIP	0.0047uF	10%	50V
C424	1-162-968-11	CERAMIC CHIP	0.0047uF	10%	50V
C425	1-164-004-11	CERAMIC CHIP	0.1uF	10%	25V
C426	1-162-968-11	CERAMIC CHIP	0.0047uF	10%	50V
C427	1-162-968-11	CERAMIC CHIP	0.0047uF	10%	50V
C428	1-164-227-11	CERAMIC CHIP	0.022uF	10%	25V
C429	1-164-156-11	CERAMIC CHIP	0.1uF		25V
C430	1-164-156-11	CERAMIC CHIP	0.1uF		25V
C431	1-164-227-11	CERAMIC CHIP	0.022uF	10%	25V
C432	1-165-176-11	CERAMIC CHIP	0.047uF	10%	16V
C433	1-164-227-11	CERAMIC CHIP	0.022uF	10%	25V
C434	1-164-156-11	CERAMIC CHIP	0.1uF		25V

VC-188

Ref. No.	Part No.	Description			Remarks
C435	1-165-176-11	CERAMIC CHIP	0.047uF	10%	16V
C436	1-164-156-11	CERAMIC CHIP	0.1uF		25V
C437	1-164-156-11	CERAMIC CHIP	0.1uF		25V
C438	1-164-156-11	CERAMIC CHIP	0.1uF		25V
C439	1-164-156-11	CERAMIC CHIP	0.1uF		25V
C441	1-164-156-11	CERAMIC CHIP	0.1uF		25V
C442	1-165-112-11	CERAMIC CHIP	0.33uF		16V
C443	1-162-957-11	CERAMIC CHIP	220PF	5%	50V
C444	1-164-156-11	CERAMIC CHIP	0.1uF		25V
C445	1-164-156-11	CERAMIC CHIP	0.1uF		25V
C446	1-162-970-11	CERAMIC CHIP	0.01uF	10%	25V
C447	1-162-970-11	CERAMIC CHIP	0.01uF	10%	25V
C448	1-165-176-11	CERAMIC CHIP	0.047uF	10%	16V
C449	1-165-176-11	CERAMIC CHIP	0.047uF	10%	16V
C450	1-107-682-11	CERAMIC CHIP	1uF	10%	16V
C451	1-164-004-11	CERAMIC CHIP	0.1uF	10%	25V
C452	1-165-176-11	CERAMIC CHIP	0.047uF	10%	16V
C453	1-162-968-11	CERAMIC CHIP	0.0047uF	10%	50V
C456	1-135-259-11	TANTAL. CHIP	10uF	20%	6.3V
C458	1-164-004-11	CERAMIC CHIP	0.1uF	10%	25V
C459	1-162-970-11	CERAMIC CHIP	0.01uF	10%	25V
C502	1-162-970-11	CERAMIC CHIP	0.01uF	10%	25V (TRV34/TRV44/TRV52/TRV512/TRV44E)
C504	1-163-009-11	CERAMIC CHIP	0.001uF	10%	50V (TRV32/TRV312/TRV14E/TRV24E)
C505	1-104-908-11	TANTAL. CHIP	47uF	20%	4V (TRV32/TRV34/TRV44/TRV52/TRV53/TRV44E)
C507	1-107-823-11	CERAMIC CHIP	0.47uF	10%	16V (TRV34/TRV44/TRV52/TRV512/TRV44E)
C508	1-135-149-21	TANTALUM CHIP	2.2uF	20%	10V (TRV34/TRV44/TRV52/TRV512/TRV44E)
C509	1-104-847-11	TANTAL. CHIP	22uF	20%	4V (TRV34/TRV44/TRV52/TRV512/TRV44E)
C509	1-135-145-11	TANTALUM CHIP	0.47uF	10%	35V (TRV32/TRV312/TRV14E/TRV24E)
C510	1-162-970-11	CERAMIC CHIP	0.01uF	10%	25V
C512	1-162-968-11	CERAMIC CHIP	0.0047uF	10%	50V (TRV34/TRV44/TRV52/TRV512/TRV44E)
C513	1-107-826-11	CERAMIC CHIP	0.1uF	10%	16V (TRV53)
C513	1-115-467-11	CERAMIC CHIP	0.22uF	10%	10V (TRV32/TRV312/TRV14E/TRV24E)
C514	1-162-925-11	CERAMIC CHIP	68PF	5%	50V
C515	1-162-966-11	CERAMIC CHIP	0.0022uF	10%	50V (TRV53)
C515	1-162-960-11	CERAMIC CHIP	220PF	10%	50V (TRV32/TRV312/TRV14E/TRV24E)
C516	1-135-149-21	TANTALUM CHIP	2.2uF	20%	10V (TRV34/TRV44/TRV52/TRV512/TRV44E)
C517	1-107-823-11	CERAMIC CHIP	0.47uF	10%	16V (TRV34/TRV44/TRV52/TRV512/TRV44E)
C518	1-135-149-21	TANTALUM CHIP	2.2uF	20%	10V (TRV34/TRV44/TRV52/TRV512/TRV44E)
C519	1-135-181-21	TANTALUM CHIP	4.7uF	20%	6.3V (TRV53)
C520	1-162-970-11	CERAMIC CHIP	0.01uF	10%	25V
C522	1-164-227-11	CERAMIC CHIP	0.022uF	10%	25V (TRV53)
C522	1-162-970-11	CERAMIC CHIP	0.01uF	10%	25V (TRV34/TRV44/TRV52/TRV512/TRV44E)
C522	1-162-963-11	CERAMIC CHIP	680PF	10%	50V (TRV32/TRV312/TRV14E/TRV24E)
C523	1-124-778-00	ELECT CHIP	22uF	20%	6.3V
C524	1-107-826-11	CERAMIC CHIP	0.1uF	10%	16V (TRV53)
C525	1-135-259-11	TANTAL. CHIP	10uF	20%	6.3V (TRV53)
C529	1-104-847-11	TANTAL. CHIP	22uF	20%	4V
C530	1-135-259-11	TANTAL. CHIP	10uF	20%	6.3V (TRV34/TRV44/TRV52/TRV512/TRV44E)
C531	1-104-752-11	TANTAL. CHIP	33uF	20%	6.3V (TRV53)
C531	1-104-908-11	TANTAL. CHIP	47uF	20%	4V (TRV32/TRV34/TRV44/TRV52/TRV53/TRV44E)
C532	1-162-970-11	CERAMIC CHIP	0.01uF	10%	25V
C533	1-216-864-11	METAL CHIP	0	5%	1/16W (TRV53)
C533	1-162-970-11	CERAMIC CHIP	0.01uF	10%	25V (TRV32/TRV34/TRV44/TRV52/TRV53/TRV44E)
C534	1-164-232-11	CERAMIC CHIP	0.01uF		50V (TRV34/TRV44/TRV52/TRV512/TRV44E)
C534	1-164-182-11	CERAMIC CHIP	0.0033uF	10%	50V (TRV32/TRV312/TRV14E/TRV24E)
C535	1-104-852-11	TANTAL. CHIP	22uF	20%	6.3V (TRV53)
C535	1-104-752-11	TANTAL. CHIP	33uF	20%	6.3V (TRV34/TRV44/TRV52/TRV512/TRV44E)
C535	1-135-259-11	TANTAL. CHIP	10uF	20%	6.3V (TRV32/TRV312/TRV14E/TRV24E)
C537	1-115-467-11	CERAMIC CHIP	0.22uF	10%	10V
C539	1-104-847-11	TANTAL. CHIP	22uF	20%	4V (TRV34/TRV44/TRV52/TRV512/TRV44E)
C541	1-135-149-21	TANTALUM CHIP	2.2uF	20%	10V (TRV34/TRV44/TRV52/TRV512/TRV44E)
C541	1-135-259-11	TANTAL. CHIP	10uF	20%	6.3V (TRV32/TRV312/TRV14E/TRV24E)
C542	1-107-823-11	CERAMIC CHIP	0.47uF	10%	16V (TRV34/TRV44/TRV52/TRV512/TRV44E)
C543	1-135-157-21	TANTALUM CHIP	10uF	20%	6.3V (TRV53)
C543	1-104-908-11	TANTAL. CHIP	47uF	20%	4V (TRV34/TRV44/TRV52/TRV512/TRV44E)
C543	1-135-155-21	TANTALUM CHIP	4.7uF	10%	16V (TRV32/TRV312/TRV14E/TRV24E)
C544	1-115-467-11	CERAMIC CHIP	0.22uF	10%	10V (TRV34/TRV44/TRV52/TRV512/TRV44E)
C546	1-126-393-11	ELECT CHIP	33uF	20%	10V (TRV53)
C546	1-126-205-11	ELECT CHIP	47uF	20%	6.3V (TRV32/TRV34/TRV44/TRV52/TRV53/TRV44E)
C548	1-135-259-11	TANTAL. CHIP	10uF	20%	6.3V (TRV53)
C548	1-135-181-21	TANTALUM CHIP	4.7uF	20%	6.3V (TRV34/TRV44/TRV52/TRV512/TRV44E)
C548	1-107-685-11	TANTAL. CHIP	15uF	20%	6.3V (TRV32/TRV312/TRV14E/TRV24E)
C550	1-135-149-21	TANTALUM CHIP	2.2uF	20%	10V (TRV34/TRV44/TRV52/TRV512/TRV44E)
C550	1-104-847-11	TANTAL. CHIP	22uF	20%	4V (TRV32/TRV312/TRV14E/TRV24E)
C551	1-162-970-11	CERAMIC CHIP	0.01uF	10%	25V (TRV53)
C551	1-216-841-11	METAL CHIP	47K	5%	1/16W (TRV32/TRV312/TRV14E/TRV24E)
C553	1-162-968-11	CERAMIC CHIP	0.0047uF	10%	50V (TRV34/TRV44/TRV52/TRV512/TRV44E)
C554	1-135-181-21	TANTALUM CHIP	4.7uF	20%	6.3V (TRV32/TRV53/TRV312/TRV14E/TRV24E)
C555	1-135-145-11	TANTALUM CHIP	0.47uF	10%	35V (TRV53)
C555	1-135-259-11	TANTAL. CHIP	10uF	20%	6.3V (TRV32/TRV312/TRV14E/TRV24E)
C556	1-135-149-21	TANTALUM CHIP	2.2uF	20%	10V (TRV34/TRV44/TRV52/TRV512/TRV44E)
C556	1-135-181-21	TANTALUM CHIP	4.7uF	20%	6.3V (TRV32/TRV53/TRV312/TRV14E/TRV24E)
C557	1-162-970-11	CERAMIC CHIP	0.01uF	10%	25V (TRV34/TRV44/TRV52/TRV53/TRV512/TRV44E)

Ref. No.	Part No.	Description			Remarks
C557	1-115-467-11	CERAMIC CHIP	0.22uF	10%	10V
					(TRV32/TRV312/TRV14E/TRV24E)
C558	1-163-019-00	CERAMIC CHIP	0.0068uF	10%	50V
					(TRV53)
C558	1-107-823-11	CERAMIC CHIP	0.47uF	10%	16V
					(TRV34/TRV44/TRV52/TRV512/TRV44E)
C558	1-109-982-11	CERAMIC CHIP	1uF	10%	10V
					(TRV32/TRV312/TRV14E/TRV24E)
C561	1-135-259-11	TANTAL. CHIP	10uF	20%	6.3V
C563	1-135-259-11	TANTAL. CHIP	10uF	20%	6.3V
					(TRV34/TRV44/TRV52/TRV512/TRV44E)
C571	1-107-682-11	CERAMIC CHIP	1uF	10%	16V
					(TRV14E/TRV24E/TRV44E)
C572	1-164-392-11	CERAMIC CHIP	390PF	5%	50V
					(TRV14E/TRV24E/TRV44E)
C573	1-135-091-00	TANTALUM CHIP	1uF	20%	16V
					(TRV14E/TRV24E/TRV44E)
C574	1-135-259-11	TANTAL. CHIP	10uF	20%	6.3V
					(TRV14E/TRV24E/TRV44E)
C575	1-162-964-11	CERAMIC CHIP	0.001uF	10%	50V
					(TRV14E/TRV24E/TRV44E)
C576	1-162-957-11	CERAMIC CHIP	220PF	5%	50V
					(TRV14E/TRV24E/TRV44E)
C577	1-162-957-11	CERAMIC CHIP	220PF	5%	50V
					(TRV14E/TRV24E/TRV44E)
C578	1-107-682-11	CERAMIC CHIP	1uF	10%	16V
					(TRV14E/TRV24E/TRV44E)
C602	1-107-826-11	CERAMIC CHIP	0.1uF	10%	16V
C603	1-164-677-11	CERAMIC CHIP	0.033uF	10%	16V
C604	1-162-964-11	CERAMIC CHIP	0.001uF	10%	50V
C605	1-164-156-11	CERAMIC CHIP	0.1uF		25V
C606	1-162-970-11	CERAMIC CHIP	0.01uF	10%	25V
C607	1-164-156-11	CERAMIC CHIP	0.1uF		25V
C608	1-164-489-11	CERAMIC CHIP	0.22uF	10%	16V
C609	1-162-970-11	CERAMIC CHIP	0.01uF	10%	25V
C610	1-162-970-11	CERAMIC CHIP	0.01uF	10%	25V
C611	1-135-181-21	TANTALUM CHIP	4.7uF	20%	6.3V
C612	1-164-156-11	CERAMIC CHIP	0.1uF		25V
C613	1-162-970-11	CERAMIC CHIP	0.01uF	10%	25V
C614	1-162-970-11	CERAMIC CHIP	0.01uF	10%	25V
C615	1-162-970-11	CERAMIC CHIP	0.01uF	10%	25V
C616	1-115-156-11	CERAMIC CHIP	1uF		10V
C618	1-162-974-11	CERAMIC CHIP	0.01uF		50V
C619	1-104-752-11	TANTAL. CHIP	33uF	20%	6.3V
C620	1-107-826-11	CERAMIC CHIP	0.1uF	10%	16V
C621	1-135-149-21	TANTALUM CHIP	2.2uF	20%	10V
C701	1-107-826-11	CERAMIC CHIP	0.1uF	10%	16V
C704	1-115-156-11	CERAMIC CHIP	1uF		10V
C705	1-164-232-11	CERAMIC CHIP	0.01uF		50V
C706	1-135-214-21	TANTAL. CHIP	4.7uF	20%	20V
C712	1-164-156-11	CERAMIC CHIP	0.1uF		25V
C714	1-135-259-11	TANTAL. CHIP	10uF	20%	6.3V
C715	1-164-156-11	CERAMIC CHIP	0.1uF		25V
C717	1-162-964-11	CERAMIC CHIP	0.001uF	10%	50V
C718	1-162-913-11	CERAMIC CHIP	8PF	0.5PF	50V
C719	1-164-489-11	CERAMIC CHIP	0.22uF	10%	16V
C722	1-162-964-11	CERAMIC CHIP	0.001uF	10%	50V
C725	1-162-970-11	CERAMIC CHIP	0.01uF	10%	25V
C726	1-135-259-11	TANTAL. CHIP	10uF	20%	6.3V
C727	1-135-091-00	TANTALUM CHIP	1uF	20%	16V
C728	1-135-091-00	TANTALUM CHIP	1uF	20%	16V
C729	1-107-823-11	CERAMIC CHIP	0.47uF	10%	16V

Ref. No.	Part No.	Description			Remarks
C732	1-164-004-11	CERAMIC CHIP	0.1uF	10%	25V
C734	1-162-964-11	CERAMIC CHIP	0.001uF	10%	50V
C735	1-135-259-11	TANTAL. CHIP	10uF	20%	6.3V
C736	1-164-156-11	CERAMIC CHIP	0.1uF		25V
C739	1-162-921-11	CERAMIC CHIP	33PF	5%	50V
					(TRV24E/TRV44E)
C739	1-162-919-11	CERAMIC CHIP	22PF	5%	50V
					(TRV14E)
C740	1-164-315-11	CERAMIC CHIP	470PF	2%	50V
					(TRV14E/TRV24E/TRV44E)
C741	1-107-688-11	TANTAL. CHIP	1.5uF	20%	10V
					(TRV14E/TRV24E/TRV44E)
C742	1-164-156-11	CERAMIC CHIP	0.1uF		25V
					(TRV14E/TRV24E/TRV44E)
C745	1-164-156-11	CERAMIC CHIP	0.1uF		25V
C746	1-164-156-11	CERAMIC CHIP	0.1uF		25V
C750	1-115-156-11	CERAMIC CHIP	1uF		10V
C751	1-164-346-11	CERAMIC CHIP	1uF		16V
C752	1-162-919-11	CERAMIC CHIP	22PF	5%	50V
C753	1-162-919-11	CERAMIC CHIP	22PF	5%	50V
C754	1-162-912-11	CERAMIC CHIP	7PF	0.5PF	50V
C755	1-164-346-11	CERAMIC CHIP	1uF		16V
C757	1-135-181-21	TANTALUM CHIP	4.7uF	20%	6.3V
C758	1-162-970-11	CERAMIC CHIP	0.01uF	10%	25V
C759	1-115-156-11	CERAMIC CHIP	1uF		10V
C764	1-162-928-11	CERAMIC CHIP	120PF	5%	50V
					(TRV34/TRV44/TRV52/TRV53/TRV512)
C764	1-162-927-11	CERAMIC CHIP	100PF	5%	50V
					(TRV32/TRV312)
C765	1-162-919-11	CERAMIC CHIP	22PF	5%	50V
					(TRV34/TRV44/TRV52/TRV53/TRV512)
C765	1-162-918-11	CERAMIC CHIP	18PF	5%	50V
					(TRV32/TRV312)
C770	1-162-964-11	CERAMIC CHIP	0.001uF	10%	50V
					(EXCEPT TRV14E)
C771	1-162-964-11	CERAMIC CHIP	0.001uF	10%	50V
					(EXCEPT TRV14E)
C772	1-135-181-21	TANTALUM CHIP	4.7uF	20%	6.3V
C773	1-162-970-11	CERAMIC CHIP	0.01uF	10%	25V
C774	1-162-970-11	CERAMIC CHIP	0.01uF	10%	25V
C775	1-162-964-11	CERAMIC CHIP	0.001uF	10%	50V
C776	1-164-156-11	CERAMIC CHIP	0.1uF		25V
					(TRV14E)
C776	1-216-818-11	METAL CHIP	560	5%	1/16W
					(EXCEPT TRV14E)
C777	1-164-156-11	CERAMIC CHIP	0.1uF		25V
					(TRV14E)
C777	1-216-818-11	METAL CHIP	560	5%	1/16W
					(EXCEPT TRV14E)
C778	1-162-970-11	CERAMIC CHIP	0.01uF	10%	25V
					(EXCEPT TRV14E)
C779	1-135-259-11	TANTAL. CHIP	10uF	20%	6.3V
					(EXCEPT TRV14E)
C780	1-162-970-11	CERAMIC CHIP	0.01uF	10%	25V
					(EXCEPT TRV14E)
C781	1-162-970-11	CERAMIC CHIP	0.01uF	10%	25V
					(EXCEPT TRV14E)
C782	1-164-156-11	CERAMIC CHIP	0.1uF		25V
		< CONNECTOR >			
CN101	1-766-346-21	CONNECTOR, FFC/FPC 16P			
CN102	1-766-869-21	CONNECTOR, FFC/FPC 9P			
		(TRV34/TRV44/TRV52/TRV53/TRV512/TRV44E)			
CN102	1-764-708-21	CONNECTOR, FFC/FPC (LIF) 9P			
		(TRV32/TRV312/TRV14E/TRV24E)			
CN301	1-774-054-21	CONNECTOR, FFC/FPC (ZIF) 45P			
CN302	1-691-931-11	CONNECTOR, BOARD TO BOARD 38P			
CN303	1-766-644-21	CONNECTOR, FFC/FPC 8P			
CN304	1-573-522-21	CONNECTOR, BOARD TO BOARD 14P			
		(TRV52/TRV53/TRV512)			

Ref. No.	Part No.	Description	Remarks
CN400	1-774-635-21	CONNECTOR, FFC/FPC 10P	
CN401	1-766-342-21	CONNECTOR, FFC/FPC 12P	
CN402	1-774-639-21	CONNECTOR, FFC/FPC 15P	
CN403	1-766-644-21	CONNECTOR, FFC/FPC 8P	
CN501	1-750-076-21	CONNECTOR, FFC/FPC 12P	
CN601	1-764-530-21	CONNECTOR, FFC/FPC (ZIF) 23P	
CN701	1-750-630-11	CONNECTOR, FFC/FPC (ZIF) 16P	
CN702	1-766-336-21	CONNECTOR, FFC/FPC 6P (EXCEPT TRV14E)	
		< DIODE >	
D101	8-719-404-49	DIODE MA111-TX	
D102	8-719-820-41	DIODE 1SS302	
D103	8-719-059-51	DIODE MA3J142E0LSO	
D201	8-719-059-51	DIODE MA3J142E0LSO	
D202	8-719-404-49	DIODE MA111-TX (TRV14E/TRV24E/TRV44E)	
D203	8-719-404-49	DIODE MA111	
D204	8-719-059-51	DIODE MA3J142E0LSO	
D301	8-719-061-81	DIODE TLYU1002(TPX1,SONY)	
D302	8-719-061-81	DIODE TLYU1002(TPX1,SONY)	
D303	8-719-061-81	DIODE TLYU1002(TPX1,SONY)	
D304	8-719-061-81	DIODE TLYU1002(TPX1,SONY)	
D305	8-719-061-81	DIODE TLYU1002(TPX1,SONY)	
D306	8-719-061-82	DIODE TLSU1002(TPX1,SONY)	(TRV52/TRV53/TRV512)
D307	8-719-404-49	DIODE MA111	
D705	8-719-002-81	DIODE 1T363-01-T8A	(TRV14E/TRV24E/TRV44E)
D706	8-713-102-28	DIODE 1T379-04-T8A	
		< FERRITE BEAD >	
FB301	1-414-385-11	INDUCTOR, FERRITE BEAD	
FB601	1-414-228-11	INDUCTOR, FERRITE BEAD	
FB701	1-500-284-21	INDUCTOR, FERRITE BEAD	
FB702	1-414-228-11	INDUCTOR, FERRITE BEAD	(TRV32/TRV52/TRV53/TRV312/TRV512)
FB703	1-414-228-11	INDUCTOR, FERRITE BEAD	
FB704	1-500-284-21	INDUCTOR, FERRITE BEAD	
FB705	1-414-228-11	INDUCTOR, FERRITE BEAD	
FB706	1-414-228-11	INDUCTOR, FERRITE BEAD	
FB707	1-414-228-11	INDUCTOR, FERRITE BEAD	
FB708	1-414-228-11	INDUCTOR, FERRITE BEAD	
		< IC >	
IC101	8-752-071-15	IC CXA1702AR-T6	
IC201	8-752-075-45	IC CXA2051R-T6	
IC202	8-759-035-90	IC SC7S02F	
IC205	8-759-295-66	IC BA7653AF-E2	
IC302	8-759-290-12	IC M62370GP-650D	
IC303	8-759-449-47	IC uPD6466GS-610-GLG-E2	
IC304	8-759-391-88	IC MC14066BDTR2	
IC400	8-752-880-05	IC CXP87460-011R	
IC401	8-759-445-93	IC AK6440AM-E2 (TRV14E)	
IC401	8-759-365-53	IC S-29L353AFS-TB (EXCEPT TRV14E)	
IC402	8-752-078-49	IC CXA1814Q-T4	
IC403	8-759-327-67	IC LB1950V-TLM	
IC404	8-759-327-62	IC TA8482FN-EL (TRV14E/TRV24E/TRV44E)	
IC404	8-759-327-61	IC LB8112V-TLM	(TRV32/TRV34/TRV44/TRV52/TRV53/TRV312/TRV512)

Ref. No.	Part No.	Description	Remarks
IC405	8-759-234-20	IC TC7S08F	
IC501	8-759-368-09	IC LA7457W-TBM (TRV53)	
IC501	8-759-368-08	IC AN2980FH-EB	(TRV34/TRV44/TRV52/TRV512/TRV44E)
IC501	8-752-075-66	IC CXA1837R-T6	(TRV32/TRV312/TRV14E/TRV24E)
IC570	8-759-334-09	IC CXA2003N-T4 (TRV14E/TRV24E/TRV44E)	
IC601	8-759-337-40	IC NJM2904V(TE2)	
IC602	8-759-444-87	IC NJM324V(TE2)	
IC603	8-759-351-46	IC MPC17A34RVMEL	
IC604	8-759-371-59	IC CF45853APW-E10	
IC702	8-752-384-74	IC CXD2486R-T4	
IC703	8-752-078-86	IC CXA2056Q-T4	
IC704	8-759-459-28	IC ADS932Y/T2	
IC705	8-752-374-02	IC CXD2418R-T4	
IC706	8-752-379-66	IC CXD2180AR-T6 (TRV14E)	
IC706	8-759-440-38	IC CXD8562AR-TEB (EXCEPT TRV14E)	
IC707	8-759-446-62	IC HG51D267FGTL (EXCEPT TRV14E)	
IC708	8-752-879-49	IC CXP81120-034R (EXCEPT TRV14E)	
IC709	8-759-198-34	IC TA75S558F(TE85R)	(TRV14E/TRV24E/TRV44E)
		< COIL >	
L101	1-412-066-21	INDUCTOR CHIP 220uH	
L102	1-412-185-11	INDUCTOR 12uH	
L103	1-412-066-21	INDUCTOR CHIP 220uH	
L104	1-414-754-11	INDUCTOR 10uH	
L105	1-412-950-11	INDUCTOR 8.2uH	
L106	1-412-957-11	INDUCTOR 33uH	
L107	1-410-658-31	INDUCTOR CHIP 220uH	
L108	1-412-280-31	INDUCTOR 330uH	
L109	1-412-282-41	INDUCTOR 470uH	
L110	1-410-655-31	INDUCTOR CHIP 120uH	
L111	1-412-355-41	INDUCTOR 180uH	
L112	1-412-355-41	INDUCTOR 180uH	
L113	1-412-957-11	INDUCTOR 33uH	
L114	1-414-373-31	INDUCTOR CHIP 10uH	
L115	1-414-754-11	INDUCTOR 10uH	
L202	1-414-757-11	INDUCTOR 100uH	
L203	1-412-962-11	INDUCTOR 82uH	
L205	1-412-955-11	INDUCTOR 22uH	(TRV32/TRV34/TRV44/TRV52/TRV53/TRV312/TRV512)
L207	1-412-962-11	INDUCTOR 82uH	
L210	1-412-951-11	INDUCTOR 10uH (TRV14E)	
L211	1-414-754-11	INDUCTOR 10uH	
L212	1-414-754-11	INDUCTOR 10uH	(TRV34/TRV44/TRV52/TRV53/TRV512/TRV44E)
L212	1-414-755-11	INDUCTOR 22uH	(TRV32/TRV312/TRV14E/TRV24E)
L213	1-414-196-41	INDUCTOR 47uH (TRV14E/TRV24E/TRV44E)	
L213	1-414-170-41	INDUCTOR 100uH	(TRV32/TRV34/TRV44/TRV52/TRV53/TRV312/TRV512)
L214	1-414-753-91	INDUCTOR 4.7uH	
L215	1-412-962-11	INDUCTOR 82uH	
L216	1-414-170-41	INDUCTOR 100uH (TRV14E/TRV24E/TRV44E)	
L301	1-414-754-11	INDUCTOR 10uH	
L303	1-414-754-11	INDUCTOR 10uH	
L304	1-414-754-11	INDUCTOR 10uH	
L305	1-411-165-21	COIL, OSC	
L400	1-414-754-11	INDUCTOR 10uH	
L401	1-412-959-11	INDUCTOR 47uH	
L570	1-414-754-11	INDUCTOR 10uH (TRV14E/TRV24E/TRV44E)	
L601	1-414-398-11	INDUCTOR 10uH	
L602	1-414-754-11	INDUCTOR 10uH	

Ref. No.	Part No.	Description	Remarks
L706	1-414-754-11	INDUCTOR 10uH	
L715	1-414-754-11	INDUCTOR 10uH	
L717	1-414-754-11	INDUCTOR 10uH	
L751	1-414-754-11	INDUCTOR 10uH	
L752	1-412-959-11	INDUCTOR 47uH	
		(TRV32/TRV34/TRV44/TRV52/TRV53/TRV312/TRV512)	
L753	1-412-959-11	INDUCTOR 47uH	
		(TRV32/TRV34/TRV44/TRV52/TRV53/TRV312/TRV512)	
L754	1-414-754-11	INDUCTOR 10uH (EXCEPT TRV14E)	
		< TRANSISTOR >	
Q101	8-729-824-02	TRANSISTOR 2SA1838	
Q102	8-729-420-24	TRANSISTOR 2SB1218A-QRS	
Q103	8-729-823-86	TRANSISTOR 2SA1745	
		(TRV32/TRV34/TRV44/TRV52/TRV53/TRV312/TRV512)	
Q104	8-729-823-86	TRANSISTOR 2SA1745	
Q105	8-729-823-86	TRANSISTOR 2SA1745	
Q106	8-729-823-86	TRANSISTOR 2SA1745	
		(TRV32/TRV34/TRV44/TRV52/TRV53/TRV312/TRV512)	
Q107	8-729-230-63	TRANSISTOR 2SC4116-YG	
Q108	8-729-402-42	TRANSISTOR UN5213	
		(TRV32/TRV34/TRV44/TRV52/TRV53/TRV312/TRV512)	
Q109	8-729-402-42	TRANSISTOR UN5213	
		(TRV32/TRV34/TRV44/TRV52/TRV53/TRV312/TRV512)	
Q110	8-729-402-42	TRANSISTOR UN5213	
Q111	8-729-402-42	TRANSISTOR UN5213	
Q112	8-729-230-63	TRANSISTOR 2SC4116-YG	
Q113	8-729-402-42	TRANSISTOR UN5213-TX	
		(TRV14E/TRV24E/TRV44E)	
Q114	8-729-402-42	TRANSISTOR UN5213	
Q115	8-729-402-42	TRANSISTOR UN5213	
Q116	8-729-230-63	TRANSISTOR 2SC4116-YG	
Q117	8-729-420-24	TRANSISTOR 2SB1218A-QRS	
Q118	8-729-012-50	TRANSISTOR 2SC4400-3/4/5	
Q119	8-729-230-63	TRANSISTOR 2SC4116-YG	
Q121	8-729-015-74	TRANSISTOR UN5111-TX	
Q122	8-729-117-73	TRANSISTOR 2SC4178-F14	
Q123	8-729-230-63	TRANSISTOR 2SC4116-YG	
Q202	8-729-230-63	TRANSISTOR 2SC4116-YG	
Q206	8-729-420-24	TRANSISTOR 2SB1218A-QRS	
Q208	8-729-402-42	TRANSISTOR UN5213	
Q211	8-729-230-60	TRANSISTOR 2SA1586-YG (TRV32/TRV312)	
Q211	8-729-420-24	TRANSISTOR 2SB1218A-QRS	
		(TRV32/TRV34/TRV44/TRV52/TRV53/TRV312/TRV512)	
Q213	8-729-402-42	TRANSISTOR UN5213	
Q214	8-729-420-24	TRANSISTOR 2SB1218A-QRS	
Q215	8-729-013-15	TRANSISTOR 2SC4909-TL	
Q216	8-729-420-20	TRANSISTOR XN4312-TW	
		(TRV14E/TRV24E/TRV44E)	
Q217	8-729-420-12	TRANSISTOR XN4213	
Q218	8-729-420-24	TRANSISTOR 2SB1218A-QRS	
Q219	8-729-230-63	TRANSISTOR 2SC4116-YG	
Q221	8-729-402-42	TRANSISTOR UN5213	
Q222	8-729-402-42	TRANSISTOR UN5213	
		(TRV32/TRV312/TRV14E/TRV24E/TRV44E)	
Q223	8-729-230-63	TRANSISTOR 2SC4116-YG (TRV14E)	
Q224	8-729-420-24	TRANSISTOR 2SB1218A-QRS (TRV14E)	
Q226	8-729-230-63	TRANSISTOR 2SC4116-YG	
Q227	8-729-013-15	TRANSISTOR 2SC4909-TL	
Q228	8-729-403-35	TRANSISTOR UN5113	
Q229	8-729-402-42	TRANSISTOR UN5213	
Q230	8-729-420-24	TRANSISTOR 2SB1218A-QRS	
		(TRV52/TRV53/TRV512)	
Q231	8-729-420-24	TRANSISTOR 2SB1218A-QRS	
Q232	8-729-012-50	TRANSISTOR 2SC4400-3/4/5	

Ref. No.	Part No.	Description	Remarks
Q301	8-729-807-86	TRANSISTOR 2SB1295-UL5	
Q302	8-729-402-42	TRANSISTOR UN5213	
Q303	8-729-402-42	TRANSISTOR UN5213	
		(TRV52/TRV53/TRV512)	
Q304	8-729-101-07	TRANSISTOR 2SB798-DL	
Q305	8-729-230-63	TRANSISTOR 2SC4116-YG	
Q400	8-729-230-63	TRANSISTOR 2SC4116-YG	
Q401	8-729-230-63	TRANSISTOR 2SC4116-YG	
Q501	8-729-420-53	TRANSISTOR UN5115	
Q506	8-729-421-26	TRANSISTOR UN5214	
		(TRV34/TRV44/TRV52/TRV512/TRV44E)	
Q507	8-729-421-26	TRANSISTOR UN5214	
Q570	8-729-402-42	TRANSISTOR UN5213	
		(TRV14E/TRV24E/TRV44E)	
Q601	8-729-230-63	TRANSISTOR 2SC4116-YG	
Q602	8-729-230-63	TRANSISTOR 2SC4116-YG	
Q603	8-729-013-31	TRANSISTOR 2SA1588-OY-TE85L	
Q703	8-729-402-42	TRANSISTOR UN5213	
Q704	8-729-403-35	TRANSISTOR UN5113	
Q705	8-729-403-35	TRANSISTOR UN5113	
Q706	8-729-402-42	TRANSISTOR UN5213	
Q750	8-729-420-24	TRANSISTOR 2SB1218A-QRS	
Q752	8-729-420-24	TRANSISTOR 2SB1218A-QRS	
Q753	8-729-013-15	TRANSISTOR 2SC4909-TL	
		(TRV32/TRV34	
Q754	8-729-013-15	TRANSISTOR 2SC4909-TL	
		(TRV32/TRV34	
		< RESISTOR >	
R061	1-216-830-11	METAL CHIP 5.6K 5% 1/16W	
R062	1-216-825-11	METAL CHIP 2.2K 5% 1/16W	
R063	1-216-821-11	METAL CHIP 1K 5% 1/16W	
R064	1-216-837-11	METAL CHIP 22K 5% 1/16W	
R065	1-216-832-11	METAL CHIP 8.2K 5% 1/16W	
R101	1-216-803-11	METAL CHIP 33 5% 1/16W	
R102	1-216-818-11	METAL CHIP 560 5% 1/16W	
R103	1-216-814-11	METAL CHIP 270 5% 1/16W	
R104	1-216-813-11	METAL CHIP 220 5% 1/16W	
R105	1-216-837-11	METAL CHIP 22K 5% 1/16W	
R106	1-216-828-11	METAL CHIP 3.9K 5% 1/16W	
		(TRV32/TRV34/TRV44/TRV52/TRV53/TRV312/TRV512)	
R107	1-216-828-11	METAL CHIP 3.9K 5% 1/16W	
R108	1-216-828-11	METAL CHIP 3.9K 5% 1/16W	
R109	1-216-839-11	METAL CHIP 33K 5% 1/16W	
R110	1-216-828-11	METAL CHIP 3.9K 5% 1/16W	
		(TRV32/TRV34/TRV44/TRV52/TRV53/TRV312/TRV512)	
R111	1-216-837-11	METAL CHIP 22K 5% 1/16W	
R112	1-216-837-11	METAL CHIP 22K 5% 1/16W	
R113	1-216-829-11	METAL CHIP 4.7K 5% 1/16W	
		(TRV32/TRV34/TRV44/TRV52/TRV53/TRV312/TRV512)	
R114	1-216-829-11	METAL CHIP 4.7K 5% 1/16W	
		(TRV32/TRV34/TRV44/TRV52/TRV53/TRV312/TRV512)	
R115	1-216-829-11	METAL CHIP 4.7K 5% 1/16W	
R116	1-216-829-11	METAL CHIP 4.7K 5% 1/16W	
R117	1-216-831-11	METAL CHIP 6.8K 5% 1/16W	
R118	1-216-838-11	METAL CHIP 27K 5% 1/16W	
R119	1-216-818-11	METAL CHIP 560 5% 1/16W	
R120	1-216-818-11	METAL CHIP 560 5% 1/16W	
R121	1-216-831-11	METAL CHIP 6.8K 5% 1/16W	
R122	1-216-838-11	METAL CHIP 27K 5% 1/16W	
R123	1-216-818-11	METAL CHIP 560 5% 1/16W	
R124	1-216-818-11	METAL CHIP 560 5% 1/16W	
R125	1-216-833-11	METAL CHIP 10K 5% 1/16W	
R129	1-216-864-11	METAL CHIP 0 5% 1/16W	

VC-188

Ref. No.	Part No.	Description			Remarks
R132	1-216-797-11	METAL CHIP	10	5%	1/16W
R133	1-216-829-11	METAL CHIP	4.7K	5%	1/16W
R134	1-218-875-11	METAL GLAZE	15K	0.50%	1/16W
R135	1-216-821-11	METAL CHIP	1K	5%	1/16W
					(TRV14E/TRV24E/TRV44E)
R136	1-216-836-11	METAL CHIP	18K	5%	1/16W
R137	1-216-833-11	METAL CHIP	10K	5%	1/16W
R138	1-216-829-11	METAL CHIP	4.7K	5%	1/16W
R139	1-216-864-11	METAL CHIP	0	5%	1/16W
					(TRV32/TRV34/TRV44/TRV52/TRV53/TRV312/TRV512)
R140	1-216-833-11	METAL CHIP	10K	5%	1/16W
R141	1-216-832-11	METAL CHIP	8.2K	5%	1/16W
					(TRV14E/TRV24E/TRV44E)
R142	1-216-836-11	METAL CHIP	18K	5%	1/16W
R145	1-216-847-11	METAL CHIP	150K	5%	1/16W
R146	1-216-852-11	METAL CHIP	390K	5%	1/16W
R147	1-216-853-11	METAL CHIP	470K	5%	1/16W
R150	1-216-864-11	METAL CHIP	0	5%	1/16W
R152	1-216-833-11	METAL CHIP	10K	5%	1/16W
R153	1-216-839-11	METAL CHIP	33K	5%	1/16W
R154	1-216-821-11	METAL CHIP	1K	5%	1/16W
R155	1-216-817-11	METAL CHIP	470	5%	1/16W
R156	1-216-818-11	METAL CHIP	560	5%	1/16W
R157	1-216-822-11	METAL CHIP	1.2K	5%	1/16W
R158	1-216-809-11	METAL CHIP	100	5%	1/16W
R159	1-216-818-11	METAL CHIP	560	5%	1/16W
R160	1-216-818-11	METAL CHIP	560	5%	1/16W
R163	1-216-813-11	METAL CHIP	220	5%	1/16W
R164	1-216-818-11	METAL CHIP	560	5%	1/16W
R165	1-216-829-11	METAL CHIP	4.7K	5%	1/16W
R167	1-216-818-11	METAL CHIP	560	5%	1/16W
R168	1-216-818-11	METAL CHIP	560	5%	1/16W
R169	1-216-816-11	METAL CHIP	390	5%	1/16W
R170	1-216-821-11	METAL CHIP	1K	5%	1/16W
R171	1-216-826-11	METAL CHIP	2.7K	5%	1/16W
R172	1-216-827-11	METAL CHIP	3.3K	5%	1/16W
R174	1-216-864-11	METAL CHIP	0	5%	1/16W
R175	1-216-834-11	METAL CHIP	12K	5%	1/16W
R176	1-216-833-11	METAL CHIP	10K	5%	1/16W
R177	1-216-817-11	METAL CHIP	470	5%	1/16W
R178	1-216-807-11	METAL CHIP	68	5%	1/16W
R179	1-216-830-11	METAL CHIP	5.6K	5%	1/16W
R180	1-216-817-11	METAL CHIP	470	5%	1/16W
R181	1-216-819-11	METAL CHIP	680	5%	1/16W
R182	1-216-821-11	METAL CHIP	1K	5%	1/16W
R183	1-216-836-11	METAL CHIP	18K	5%	1/16W
R184	1-216-836-11	METAL CHIP	18K	5%	1/16W
R185	1-216-821-11	METAL CHIP	1K	5%	1/16W
R186	1-216-804-11	METAL CHIP	39	5%	1/16W
					(TRV14E/TRV24E/TRV44E)
R186	1-216-803-11	METAL CHIP	33	5%	1/16W
					(TRV32/TRV34/TRV44/TRV52/TRV53/TRV312/TRV512)
R187	1-216-824-11	METAL CHIP	1.8K	5%	1/16W
					(TRV14E/TRV24E/TRV44E)
R187	1-216-823-11	METAL CHIP	1.5K	5%	1/16W
					(TRV32/TRV34/TRV44/TRV52/TRV53/TRV312/TRV512)
R189	1-216-864-11	METAL CHIP	0	5%	1/16W
					(TRV32/TRV34/TRV44/TRV52/TRV53/TRV312/TRV512)
R190	1-216-864-11	METAL CHIP	0	5%	1/16W

Ref. No.	Part No.	Description			Remarks
R191	1-216-833-11	METAL CHIP	10K	5%	1/16W
R192	1-216-833-11	METAL CHIP	10K	5%	1/16W
R193	1-216-864-11	METAL CHIP	0	5%	1/16W
R201	1-216-833-11	METAL CHIP	10K	5%	1/16W
R202	1-216-836-11	METAL CHIP	18K	5%	1/16W
					(TRV14E)
R202	1-216-864-11	METAL CHIP	0	5%	1/16W
					(EXCEPT TRV14E)
R203	1-216-832-11	METAL CHIP	8.2K	5%	1/16W
					(TRV14E)
R204	1-216-827-11	METAL CHIP	3.3K	5%	1/16W
R205	1-216-841-11	METAL CHIP	47K	5%	1/16W
					(TRV52/TRV53/TRV512)
R206	1-216-815-11	METAL CHIP	330	5%	1/16W
					(TRV32/TRV34/TRV44/TRV52/TRV53/TRV312/TRV512)
R207	1-216-841-11	METAL CHIP	47K	5%	1/16W
					(TRV52/TRV53/TRV512)
R208	1-216-825-11	METAL CHIP	2.2K	5%	1/16W
					(TRV52/TRV53/TRV512)
R210	1-216-864-11	METAL CHIP	0	5%	1/16W
					(EXCEPT TRV24E/TRV44E)
R211	1-216-864-11	METAL CHIP	0	5%	1/16W
					(TRV24E/TRV44E)
R212	1-216-841-11	METAL CHIP	47K	5%	1/16W
R213	1-216-841-11	METAL CHIP	47K	5%	1/16W
R214	1-216-807-11	METAL CHIP	68	5%	1/16W
R215	1-216-821-11	METAL CHIP	1K	5%	1/16W
R216	1-216-817-11	METAL CHIP	470	5%	1/16W
R218	1-218-879-11	METAL GLAZE	22K	0.50%	1/16W
R219	1-216-825-11	METAL CHIP	2.2K	5%	1/16W
R220	1-216-833-11	METAL CHIP	10K	5%	1/16W
R221	1-216-833-11	METAL CHIP	10K	5%	1/16W
R222	1-216-818-11	METAL CHIP	560	5%	1/16W
R223	1-216-825-11	METAL CHIP	2.2K	5%	1/16W
R225	1-216-833-11	METAL CHIP	10K	5%	1/16W
R226	1-216-833-11	METAL CHIP	10K	5%	1/16W
					(TRV14E/TRV24E/TRV44E)
R228	1-216-822-11	METAL CHIP	1.2K	5%	1/16W
R229	1-218-863-11	METAL GLAZE	4.7K	0.50%	1/16W
R230	1-216-821-11	METAL CHIP	1K	5%	1/16W
					(TRV14E/TRV24E/TRV44E)
R231	1-216-825-11	METAL CHIP	2.2K	5%	1/16W
R232	1-216-821-11	METAL CHIP	1K	5%	1/16W
R234	1-218-849-11	METAL GLAZE	1.2K	0.50%	1/16W
R235	1-216-821-11	METAL CHIP	1K	5%	1/16W
R236	1-218-878-11	METAL GLAZE	20K	0.50%	1/16W
R238	1-216-864-11	METAL CHIP	0	5%	1/16W
R239	1-216-864-11	METAL CHIP	0	5%	1/16W
R240	1-218-876-11	METAL GLAZE	16K	0.50%	1/16W
R241	1-218-839-11	METAL GLAZE	470	0.50%	1/16W
R242	1-218-887-11	METAL GLAZE	47K	0.50%	1/16W
R243	1-216-829-11	METAL CHIP	4.7K	5%	1/16W
R244	1-216-843-11	METAL CHIP	68K	5%	1/16W
R245	1-216-864-11	METAL CHIP	0	5%	1/16W
					(TRV32/TRV34/TRV44/TRV52/TRV53/TRV312/TRV512)
R246	1-216-864-11	METAL CHIP	0	5%	1/16W
R247	1-216-833-11	METAL CHIP	10K	5%	1/16W
R248	1-216-825-11	METAL CHIP	2.2K	5%	1/16W
R249	1-216-824-11	METAL CHIP	1.8K	5%	1/16W
					(TRV14E/TRV24E/TRV44E)
R249	1-216-827-11	METAL CHIP	3.3K	5%	1/16W
					(TRV32/TRV34/TRV44/TRV52/TRV53/TRV312/TRV512)
R250	1-216-817-11	METAL CHIP	470	5%	1/16W
					(TRV34/TRV44/TRV52/TRV53/TRV512/TRV44E)
R250	1-216-818-11	METAL CHIP	560	5%	1/16W
					(TRV32/TRV312/TRV14E/TRV24E)

Ref. No.	Part No.	Description			Remarks
R252	1-216-833-11	METAL CHIP	10K	5%	1/16W
R254	1-216-841-11	METAL CHIP	47K	5%	1/16W
R255	1-216-827-11	METAL CHIP	3.3K	5%	1/16W
R256	1-216-833-11	METAL CHIP	10K	5%	1/16W
R257	1-216-821-11	METAL CHIP	1K	5%	1/16W
R259	1-216-833-11	METAL CHIP	10K	5%	1/16W
R260	1-216-817-11	METAL CHIP	470	5%	1/16W
R261	1-216-841-11	METAL CHIP	47K	5%	1/16W
					(TRV14E/TRV24E/TRV44E)
R262	1-216-837-11	METAL CHIP	22K	5%	1/16W
					(TRV14E/TRV24E/TRV44E)
R263	1-216-829-11	METAL CHIP	4.7K	5%	1/16W
					(TRV32/TRV34/TRV44/TRV52/TRV53/TRV312/TR
R265	1-216-821-11	METAL CHIP	1K	5%	1/16W
					(TRV14E)
R266	1-216-864-11	METAL CHIP	0	5%	1/16W
R267	1-216-864-11	METAL CHIP	0	5%	1/16W
R268	1-216-818-11	METAL CHIP	560	5%	1/16W
					(TRV14E)
R270	1-216-818-11	METAL CHIP	560	5%	1/16W
					(TRV14E/TRV24E)
R270	1-216-817-11	METAL CHIP	470	5%	1/16W
					(TRV32/TRV312/TRV44E)
R271	1-216-825-11	METAL CHIP	2.2K	5%	1/16W
					(TRV32/TRV312/TRV14E/TRV24E/TRV44E)
R272	1-216-823-11	METAL CHIP	1.5K	5%	1/16W
					(TRV14E/TRV24E/TRV44E)
R274	1-216-864-11	METAL CHIP	0	5%	1/16W
R276	1-216-864-11	METAL CHIP	0	5%	1/16W
R277	1-216-819-11	METAL CHIP	680	5%	1/16W
R279	1-216-821-11	METAL CHIP	1K	5%	1/16W
					(TRV14E)
R281	1-216-827-11	METAL CHIP	3.3K	5%	1/16W
R282	1-216-821-11	METAL CHIP	1K	5%	1/16W
					(TRV24E/TRV44E)
R282	1-216-817-11	METAL CHIP	470	5%	1/16W
					(TRV32/TRV34/TRV44/TRV52/TRV53/TRV312/TRV512)
R283	1-216-819-11	METAL CHIP	680	5%	1/16W
					(TRV14E)
R284	1-216-819-11	METAL CHIP	680	5%	1/16W
					(TRV14E)
R286	1-216-836-11	METAL CHIP	18K	5%	1/16W
					(TRV14E)
R287	1-216-864-11	METAL CHIP	0	5%	1/16W
					(TRV14E)
R289	1-216-839-11	METAL CHIP	33K	5%	1/16W
					(TRV14E)
R290	1-216-864-11	METAL CHIP	0	5%	1/16W
					(TRV14E/TRV24E/TRV44E)
R291	1-216-864-11	METAL CHIP	0	5%	1/16W
R292	1-216-857-11	METAL CHIP	1M	5%	1/16W
R293	1-216-817-11	METAL CHIP	470	5%	1/16W
R294	1-216-829-11	METAL CHIP	4.7K	5%	1/16W
R295	1-216-852-11	METAL CHIP	390K	5%	1/16W
R296	1-216-849-11	METAL CHIP	220K	5%	1/16W
R297	1-216-842-11	METAL CHIP	56K	5%	1/16W
R298	1-216-833-11	METAL CHIP	10K	5%	1/16W
R299	1-218-272-11	METAL GLAZE	5.1K	5%	1/16W
R302	1-216-864-11	METAL CHIP	0	5%	1/16W
R303	1-216-833-11	METAL CHIP	10K	5%	1/16W
R304	1-216-841-11	METAL CHIP	47K	5%	1/16W
R305	1-216-829-11	METAL CHIP	4.7K	5%	1/16W
R306	1-216-853-11	METAL CHIP	470K	5%	1/16W
R307	1-216-841-11	METAL CHIP	47K	5%	1/16W
R308	1-216-853-11	METAL CHIP	470K	5%	1/16W
R309	1-216-853-11	METAL CHIP	470K	5%	1/16W
R310	1-216-841-11	METAL CHIP	47K	5%	1/16W
R311	1-216-817-11	METAL CHIP	470	5%	1/16W
R312	1-208-762-11	METAL GLAZE	150	0.50%	1/10W

Ref. No.	Part No.	Description			Remarks
R313	1-208-750-11	METAL GLAZE	47	0.50%	1/10W
R314	1-216-805-11	METAL CHIP	47	5%	1/16W
R315	1-216-853-11	METAL CHIP	470K	5%	1/16W
R316	1-216-853-11	METAL CHIP	470K	5%	1/16W
R319	1-216-827-11	METAL CHIP	3.3K	5%	1/16W
R320	1-216-811-11	METAL CHIP	150	5%	1/16W
					(TRV52/TRV53/TRV512)
R321	1-216-822-11	METAL CHIP	1.2K	5%	1/16W
R322	1-216-823-11	METAL CHIP	1.5K	5%	1/16W
R323	1-216-827-11	METAL CHIP	3.3K	5%	1/16W
R324	1-216-831-11	METAL CHIP	6.8K	5%	1/16W
R325	1-216-837-11	METAL CHIP	22K	5%	1/16W
R326	1-216-831-11	METAL CHIP	6.8K	5%	1/16W
R328	1-216-853-11	METAL CHIP	470K	5%	1/16W
R329	1-216-853-11	METAL CHIP	470K	5%	1/16W
R330	1-216-864-11	METAL CHIP	0	5%	1/16W
R331	1-216-821-11	METAL CHIP	1K	5%	1/16W
R332	1-216-821-11	METAL CHIP	1K	5%	1/16W
R333	1-216-821-11	METAL CHIP	1K	5%	1/16W
R334	1-216-821-11	METAL CHIP	1K	5%	1/16W
R337	1-216-839-11	METAL CHIP	33K	5%	1/16W
R339	1-216-841-11	METAL CHIP	47K	5%	1/16W
R340	1-216-138-00	METAL CHIP	3.3	5%	1/8W
R341	1-216-830-11	METAL CHIP	5.6K	5%	1/16W
R342	1-216-864-11	METAL CHIP	0	5%	1/16W
R343	1-216-820-11	METAL CHIP	820	5%	1/16W
R344	1-216-836-11	METAL CHIP	18K	5%	1/16W
R400	1-216-845-11	METAL CHIP	100K	5%	1/16W
R401	1-216-845-11	METAL CHIP	100K	5%	1/16W
R402	1-216-845-11	METAL CHIP	100K	5%	1/16W
R403	1-216-845-11	METAL CHIP	100K	5%	1/16W
R404	1-216-845-11	METAL CHIP	100K	5%	1/16W
R405	1-216-845-11	METAL CHIP	100K	5%	1/16W
R406	1-216-833-11	METAL CHIP	10K	5%	1/16W
R407	1-216-841-11	METAL CHIP	47K	5%	1/16W
R408	1-216-845-11	METAL CHIP	100K	5%	1/16W
R410	1-216-841-11	METAL CHIP	47K	5%	1/16W
R411	1-216-864-11	METAL CHIP	0	5%	1/16W
R417	1-216-821-11	METAL CHIP	1K	5%	1/16W
R418	1-216-829-11	METAL CHIP	4.7K	5%	1/16W
R419	1-216-845-11	METAL CHIP	100K	5%	1/16W
R420	1-216-833-11	METAL CHIP	10K	5%	1/16W
R421	1-216-821-11	METAL CHIP	1K	5%	1/16W
R422	1-216-845-11	METAL CHIP	100K	5%	1/16W
R423	1-216-845-11	METAL CHIP	100K	5%	1/16W
R425	1-216-833-11	METAL CHIP	10K	5%	1/16W
R426	1-216-833-11	METAL CHIP	10K	5%	1/16W
R427	1-216-849-11	METAL CHIP	220K	5%	1/16W
R428	1-216-841-11	METAL CHIP	47K	5%	1/16W
R429	1-216-800-11	METAL GLAZE	18	5%	1/16W
R430	1-216-821-11	METAL CHIP	1K	5%	1/16W
R434	1-216-835-11	METAL CHIP	15K	5%	1/16W
R436	1-216-845-11	METAL CHIP	100K	5%	1/16W
R437	1-216-841-11	METAL CHIP	47K	5%	1/16W
R438	1-216-864-11	METAL CHIP	0	5%	1/16W
R439	1-216-825-11	METAL CHIP	2.2K	5%	1/16W
R440	1-216-825-11	METAL CHIP	2.2K	5%	1/16W
R441	1-216-837-11	METAL CHIP	22K	5%	1/16W
R442	1-216-845-11	METAL CHIP	100K	5%	1/16W
R443	1-216-837-11	METAL CHIP	22K	5%	1/16W
					(TRV32/TRV34/TRV44/TRV52/TRV53/TRV312/TRV512)
R444	1-216-837-11	METAL CHIP	22K	5%	1/16W

VC-188

Ref. No.	Part No.	Description			Remarks
R445	1-216-864-11	METAL CHIP	0	5%	1/16W (TRV14E/TRV24E/TRV44E)
R445	1-216-833-11	METAL CHIP	10K	5%	1/16W (TRV32/TRV34/TRV44/TRV52/TRV53/TRV312/TRV512)
R446	1-216-836-11	METAL CHIP	18K	5%	1/16W
R447	1-216-833-11	METAL CHIP	10K	5%	1/16W
R448	1-216-833-11	METAL CHIP	10K	5%	1/16W
R449	1-216-833-11	METAL CHIP	10K	5%	1/16W
R450	1-216-833-11	METAL CHIP	10K	5%	1/16W
R451	1-216-845-11	METAL CHIP	100K	5%	1/16W
R452	1-216-827-11	METAL CHIP	3.3K	5%	1/16W
R453	1-217-671-11	METAL CHIP	1	5%	1/10W
R454	1-217-671-11	METAL CHIP	1	5%	1/10W
R455	1-216-829-11	METAL CHIP	4.7K	5%	1/16W
R456	1-216-841-11	METAL CHIP	47K	5%	1/16W
R458	1-217-671-11	METAL CHIP	1	5%	1/10W
R459	1-217-671-11	METAL CHIP	1	5%	1/10W
R460	1-217-671-11	METAL CHIP	1	5%	1/10W
R461	1-216-845-11	METAL CHIP	100K	5%	1/16W
R462	1-216-833-11	METAL CHIP	10K	5%	1/16W
R463	1-216-833-11	METAL CHIP	10K	5%	1/16W
R464	1-216-833-11	METAL CHIP	10K	5%	1/16W
R465	1-216-808-11	METAL CHIP	82	5%	1/16W
R466	1-216-845-11	METAL CHIP	100K	5%	1/16W
R467	1-216-019-00	METAL CHIP	56	5%	1/10W
R468	1-216-833-11	METAL CHIP	10K	5%	1/16W
R469	1-216-833-11	METAL CHIP	10K	5%	1/16W
R471	1-216-821-11	METAL CHIP	1K	5%	1/16W
R472	1-216-833-11	METAL CHIP	10K	5%	1/16W
R473	1-216-833-11	METAL CHIP	10K	5%	1/16W
R475	1-216-825-11	METAL CHIP	2.2K	5%	1/16W
R478	1-216-821-11	METAL CHIP	1K	5%	1/16W
R479	1-216-817-11	METAL CHIP	470	5%	1/16W
R481	1-216-817-11	METAL CHIP	470	5%	1/16W
R484	1-216-821-11	METAL CHIP	1K	5%	1/16W
R485	1-216-821-11	METAL CHIP	1K	5%	1/16W
R486	1-216-821-11	METAL CHIP	1K	5%	1/16W
R487	1-216-821-11	METAL CHIP	1K	5%	1/16W
R488	1-216-817-11	METAL CHIP	470	5%	1/16W
R501	1-216-863-11	METAL GLAZE	3.3M	5%	1/16W (TRV53)
R501	1-216-829-11	METAL CHIP	4.7K	5%	1/16W (TRV34/TRV44/TRV52/TRV512/TRV44E)
R501	1-216-853-11	METAL CHIP	470K	5%	1/16W (TRV32/TRV312/TRV14E/TRV24E)
R502	1-216-824-11	METAL CHIP	1.8K	5%	1/16W (TRV34/TRV44/TRV52/TRV512/TRV44E)
R503	1-218-899-11	METAL GLAZE	150K	0.50%	1/16W (TRV53)
R503	1-218-897-11	METAL GLAZE	120K	0.50%	1/16W (TRV34/TRV44/TRV52/TRV512/TRV44E)
R503	1-216-864-11	METAL CHIP	0	5%	1/16W (TRV32/TRV312/TRV14E/TRV24E)
R505	1-216-833-11	METAL CHIP	10K	5%	1/16W
R506	1-218-901-11	METAL GLAZE	180K	0.50%	1/16W (TRV53)
R506	1-218-897-11	METAL GLAZE	120K	0.50%	1/16W (TRV34/TRV44/TRV52/TRV512/TRV44E)
R506	1-218-893-11	METAL GLAZE	82K	0.50%	1/16W (TRV32/TRV312/TRV14E/TRV24E)
R507	1-216-831-11	METAL CHIP	6.8K	5%	1/16W (TRV34/TRV44/TRV52/TRV53/TRV512/TRV44E)
R507	1-216-832-11	METAL CHIP	8.2K	5%	1/16W (TRV32/TRV312/TRV14E/TRV24E)
R511	1-218-915-11	METAL GLAZE	680K	0.50%	1/16W (TRV53)
R511	1-218-875-11	METAL GLAZE	15K	0.50%	1/16W (TRV34/TRV44/TRV52/TRV512/TRV44E)
R512	1-216-864-11	METAL CHIP	0	5%	1/16W (TRV34/TRV44/TRV52/TRV512/TRV44E)
R513	1-216-829-11	METAL CHIP	4.7K	5%	1/16W (TRV34/TRV44/TRV52/TRV512/TRV44E)
R514	1-216-833-11	METAL CHIP	10K	5%	1/16W (TRV34/TRV44/TRV52/TRV53/TRV512/TRV44E)
R514	1-216-831-11	METAL CHIP	6.8K	5%	1/16W (TRV32/TRV312/TRV14E/TRV24E)
R515	1-216-813-11	METAL CHIP	220	5%	1/16W (TRV34/TRV44/TRV52/TRV512/TRV44E)
R515	1-216-864-11	METAL CHIP	0	5%	1/16W (TRV32/TRV53/TRV312/TRV14E/TRV24E)
R516	1-218-897-11	METAL GLAZE	120K	0.50%	1/16W (TRV34/TRV44/TRV52/TRV512/TRV44E)
R517	1-216-861-11	METAL CHIP	2.2M	5%	1/16W (TRV53)
R517	1-216-853-11	METAL CHIP	470K	5%	1/16W (TRV34/TRV44/TRV52/TRV512/TRV44E)
R517	1-216-845-11	METAL CHIP	100K	5%	1/16W (TRV32/TRV312/TRV14E/TRV24E)
R519	1-216-820-11	METAL CHIP	820	5%	1/16W
R520	1-216-864-11	METAL CHIP	0	5%	1/16W (TRV32/TRV53/TRV312/TRV14E/TRV24E)
R522	1-216-817-11	METAL CHIP	470	5%	1/16W
R526	1-216-817-11	METAL CHIP	470	5%	1/16W (TRV34/TRV44/TRV52/TRV512/TRV44E)
R527	1-216-853-11	METAL CHIP	470K	5%	1/16W (TRV34/TRV44/TRV52/TRV512/TRV44E)
R530	1-216-857-11	METAL CHIP	1M	5%	1/16W (TRV32/TRV312/TRV14E/TRV24E)
R531	1-216-817-11	METAL CHIP	470	5%	1/16W
R532	1-216-817-11	METAL CHIP	470	5%	1/16W (TRV34/TRV44/TRV52/TRV512/TRV44E)
R533	1-216-864-11	METAL CHIP	0	5%	1/16W (TRV34/TRV44/TRV52/TRV512/TRV44E)
R534	1-216-864-11	METAL CHIP	0	5%	1/16W (TRV32/TRV312/TRV14E/TRV24E)
R537	1-216-829-11	METAL CHIP	4.7K	5%	1/16W (TRV34/TRV44/TRV52/TRV512/TRV44E)
R537	1-216-864-11	METAL CHIP	0	5%	1/16W (TRV32/TRV53/TRV312/TRV14E/TRV24E)
R556	1-216-853-11	METAL CHIP	470K	5%	1/16W
R562	1-216-864-11	METAL CHIP	0	5%	1/16W
R564	1-216-864-11	METAL CHIP	0	5%	1/16W (TRV32/TRV53/TRV312/TRV14E/TRV24E)
R570	1-216-827-11	METAL CHIP	3.3K	5%	1/16W (TRV14E/TRV24E/TRV44E)
R571	1-218-871-11	METAL GLAZE	10K	0.50%	1/16W (TRV14E/TRV24E/TRV44E)
R575	1-216-827-11	METAL CHIP	3.3K	5%	1/16W (TRV14E/TRV24E/TRV44E)
R581	1-216-833-11	METAL CHIP	10K	5%	1/16W (TRV14E/TRV24E/TRV44E)
R601	1-216-001-00	METAL CHIP	10	5%	1/10W
R603	1-216-821-11	METAL CHIP	1K	5%	1/16W
R604	1-216-845-11	METAL CHIP	100K	5%	1/16W
R605	1-216-821-11	METAL CHIP	1K	5%	1/16W
R606	1-216-835-11	METAL CHIP	15K	5%	1/16W
R607	1-216-848-11	METAL CHIP	180K	5%	1/16W
R608	1-216-848-11	METAL CHIP	180K	5%	1/16W
R609	1-216-848-11	METAL CHIP	180K	5%	1/16W
R610	1-216-830-11	METAL CHIP	5.6K	5%	1/16W
R611	1-216-815-11	METAL CHIP	330	5%	1/16W
R612	1-216-845-11	METAL CHIP	100K	5%	1/16W
R613	1-216-836-11	METAL CHIP	18K	5%	1/16W
R614	1-216-836-11	METAL CHIP	18K	5%	1/16W
R615	1-216-845-11	METAL CHIP	100K	5%	1/16W
R616	1-216-837-11	METAL CHIP	22K	5%	1/16W

Ref. No.	Part No.	Description			Remarks
R618	1-216-837-11	METAL CHIP	22K	5%	1/16W
R619	1-216-835-11	METAL CHIP	15K	5%	1/16W
R620	1-216-823-11	METAL CHIP	1.5K	5%	1/16W
R621	1-216-833-11	METAL CHIP	10K	5%	1/16W
R630	1-216-843-11	METAL CHIP	68K	5%	1/16W
					(EXCEPT TRV14E)
R631	1-216-843-11	METAL CHIP	68K	5%	1/16W
R632	1-216-848-11	METAL CHIP	180K	5%	1/16W
R633	1-216-829-11	METAL CHIP	4.7K	5%	1/16W
R701	1-216-809-11	METAL CHIP	100	5%	1/16W
					(EXCEPT TRV14E)
R702	1-216-809-11	METAL CHIP	100	5%	1/16W
					(TRV14E)
R703	1-216-857-11	METAL CHIP	1M	5%	1/16W
R704	1-216-845-11	METAL CHIP	100K	5%	1/16W
R708	1-216-821-11	METAL CHIP	1K	5%	1/16W
R709	1-218-847-11	METAL GLAZE	1K	0.50%	1/16W
R710	1-218-876-11	METAL GLAZE	16K	0.50%	1/16W
					(EXCEPT TRV14E)
R713	1-216-833-11	METAL CHIP	10K	5%	1/16W
					(TRV14E/TRV24E/TRV44E)
R714	1-216-857-11	METAL CHIP	1M	5%	1/16W
					(TRV14E/TRV24E/TRV44E)
R715	1-216-845-11	METAL CHIP	100K	5%	1/16W
					(TRV14E/TRV24E/TRV44E)
R717	1-216-829-11	METAL CHIP	4.7K	5%	1/16W
					(TRV14E/TRV24E/TRV44E)
R719	1-216-810-11	METAL CHIP	120	5%	1/16W
					(TRV14E)
R719	1-216-818-11	METAL CHIP	560	5%	1/16W
					(EXCEPT TRV14E)
R721	1-216-825-11	METAL CHIP	2.2K	5%	1/16W
					(TRV14E)
R721	1-216-827-11	METAL CHIP	3.3K	5%	1/16W
					(EXCEPT TRV14E)
R722	1-216-825-11	METAL CHIP	2.2K	5%	1/16W
					(TRV14E)
R722	1-216-827-11	METAL CHIP	3.3K	5%	1/16W
					(EXCEPT TRV14E)
R724	1-216-810-11	METAL CHIP	120	5%	1/16W
					(TRV14E)
R724	1-216-818-11	METAL CHIP	560	5%	1/16W
					(EXCEPT TRV14E)
R725	1-216-864-11	METAL CHIP	0	5%	1/16W
R728	1-216-853-11	METAL CHIP	470K	5%	1/16W
R729	1-216-809-11	METAL CHIP	100	5%	1/16W
R732	1-216-841-11	METAL CHIP	47K	5%	1/16W
R733	1-216-841-11	METAL CHIP	47K	5%	1/16W
					(TRV14E)
R734	1-216-841-11	METAL CHIP	47K	5%	1/16W
R735	1-216-841-11	METAL CHIP	47K	5%	1/16W
R743	1-216-864-11	METAL CHIP	0	5%	1/16W
					(TRV34/TRV44/TRV14E/TRV24E/TRV44E)
R744	1-216-864-11	METAL CHIP	0	5%	1/16W
R751	1-216-829-11	METAL CHIP	4.7K	5%	1/16W
R756	1-216-864-11	METAL CHIP	0	5%	1/16W
R757	1-216-864-11	METAL CHIP	0	5%	1/16W
R758	1-216-833-11	METAL CHIP	10K	5%	1/16W
					(TRV14E/TRV24E/TRV44E)
R759	1-216-836-11	METAL CHIP	18K	5%	1/16W
					(TRV14E/TRV24E/TRV44E)
R760	1-216-864-11	METAL CHIP	0	5%	1/16W
					(TRV32/TRV34/TRV44/TRV52/TRV53/TRV312/TRV512)
R761	1-216-813-11	METAL CHIP	220	5%	1/16W
					(TRV32/TRV34/TRV44/TRV52/TRV53/TRV312/TRV512)
R775	1-216-829-11	METAL CHIP	4.7K	5%	1/16W
					(TRV14E/TRV24E/TRV44E)
R776	1-216-797-11	METAL CHIP	10	5%	1/16W
R777	1-216-797-11	METAL CHIP	10	5%	1/16W
R778	1-218-885-11	METAL GLAZE	39K	0.50%	1/16W
					(EXCEPT TRV14E)

Ref. No.	Part No.	Description			Remarks
R779	1-218-885-11	METAL GLAZE	39K	0.50%	1/16W
					(EXCEPT TRV14E)
R780	1-218-891-11	METAL GLAZE	68K	0.50%	1/16W
					(EXCEPT TRV14E)
R781	1-218-891-11	METAL GLAZE	68K	0.50%	1/16W
					(EXCEPT TRV14E)
R782	1-216-821-11	METAL CHIP	1K	5%	1/16W
					(EXCEPT TRV14E)
R783	1-216-845-11	METAL CHIP	100K	5%	1/16W
					(EXCEPT TRV14E)
R784	1-216-821-11	METAL CHIP	1K	5%	1/16W
					(EXCEPT TRV14E)
R918	1-216-829-11	METAL CHIP	4.7K	5%	1/16W
					(TRV34/TRV44/TRV52/TRV512/TRV14E/TRV24E/TRV44E)
R919	1-216-839-11	METAL CHIP	33K	5%	1/16W
					(TRV24E/TRV24E)
R923	1-216-857-11	METAL CHIP	1M	5%	1/16W
					(TRV24E/TRV24E)
		< SWITCH >			
S301	1-771-029-21	SWITCH, TACTILE (PAUSE)(TRV14E/TRV24E)			
S301	1-692-088-41	SWITCH, TACTILE (PAUSE)			
					(EXCEPT TRV14E/TRV24E)
S302	1-771-029-21	SWITCH, TACTILE (STOP)(TRV14E/TRV24E)			
S302	1-692-088-41	SWITCH, TACTILE (STOP)			
					(EXCEPT TRV14E/TRV24E)
S303	1-771-029-21	SWITCH, TACTILE (FF)(TRV14E/TRV24E)			
S303	1-692-088-41	SWITCH, TACTILE (FF)			
					(EXCEPT TRV14E/TRV24E)
S304	1-771-029-21	SWITCH, TACTILE (PLAY)(TRV14E/TRV24E)			
S304	1-692-088-41	SWITCH, TACTILE (PLAY)			
					(EXCEPT TRV14E/TRV24E)
S305	1-771-029-21	SWITCH, TACTILE (REW)(TRV14E/TRV24E)			
S305	1-692-088-41	SWITCH, TACTILE (REW)			
					(EXCEPT TRV14E/TRV24E)
S306	1-771-029-21	SWITCH, TACTILE (EDITSERCH +)			
					(TRV14E/TRV24E)
S306	1-692-088-41	SWITCH, TACTILE (EDITSERCH +)			
					(EXCEPT TRV14E/TRV24E)
S307	1-771-029-21	SWITCH, TACTILE (EDITSERCH -)			
					(TRV14E/TRV24E)
S307	1-692-088-41	SWITCH, TACTILE (EDITSERCH -)			
					(EXCEPT TRV14E/TRV24E)
S308	1-692-088-41	SWITCH, TACTILE (LASER LINK)			
					(TRV52/TRV53/TRV512)
		< VIBRATOR >			
X400	1-767-031-21	VIBRATOR, CRYSTAL 11.718MHz			
					(TRV14E/TRV24E/TRV44E)
X400	1-767-030-21	VIBRATOR, CRYSTAL 11.895MHz			
					(TRV32/TRV34/TRV44/TRV52/TRV53/TRV312/TRV512)
X701	1-760-321-11	VIBRATOR, CRYSTAL 28.375MHz			
					(TRV14E/TRV24E/TRV44E)
X701	1-760-320-11	VIBRATOR, CRYSTAL 28.636MHz			
					(TRV32/TRV34/TRV44/TRV52/TRV53/TRV312/TRV512)
X702	1-579-613-11	VIBRATOR, CRYSTAL 17.734MHz			
					(TRV14E/TRV24E/TRV44E)
X703	1-579-553-11	VIBRATOR 12MHz(EXCEPT TRV14E)			

Ref. No.	Part No.	Description			Remarks
	A-7073-135-A	VF-102 BOARD, COMPLETE			
		**********			
		(TRV32/TRV34/TRV44/TRV52/TRV312/TRV512)			
	A-7073-078-A	VF-102 BOARD, COMPLETE			
		**********			
		(TRV14E/TRV24E/TRV44E)			
		(Ref.No.4,000 Series)			
		< CAPACITOR >			
C902	1-163-038-91	CERAMIC CHIP	0.1uF		25V
C903	1-135-091-00	TANTALUM CHIP	1uF	20%	16V
C904	1-162-965-11	CERAMIC CHIP	0.0015uF	10%	50V
C905	1-104-752-11	TANTAL. CHIP	33uF	20%	6.3V
C906	1-162-638-11	CERAMIC CHIP	1uF		16V
C907	1-104-563-11	FILM CHIP	0.1uF	5%	16V
C908	1-162-920-11	CERAMIC CHIP	27PF	5%	50V
⚠C910	1-164-756-11	CERAMIC CHIP	0.0033uF	5%	50V
⚠C911	1-164-713-11	CERAMIC CHIP	0.0056uF	5%	50V
C912	1-107-854-11	TANTAL. CHIP	68uF	20%	6.3V
C914	1-128-007-11	ELECT CHIP	2.2uF	20%	35V
C915	1-163-037-11	CERAMIC CHIP	0.022uF	10%	25V
C916	1-164-611-11	CERAMIC CHIP	0.001uF	10%	500V
C919	1-126-245-11	ELECT	330uF	20%	6.3V
		< CONNECTOR >			
CN901	1-566-537-11	CONNECTOR, FPC (NON ZIF) 5P			
CN902	1-573-290-21	PIN, CONNECTOR (1.5MM) (SMD) 4P			
		< DIODE >			
D901	8-719-951-21	DIODE PR1102W-TR			
D902	8-719-404-49	DIODE MA111			
		< IC >			
IC901	8-759-196-14	IC BA7149F-E2			
		< COIL >			
L901	1-412-031-11	INDUCTOR CHIP 47uH			
L902	1-410-387-11	INDUCTOR CHIP 33uH			
⚠L903	1-411-697-11	COIL, FERRITE (HLC)			
L904	1-414-757-11	INDUCTOR 100uH			
		< TRANSISTOR >			
Q902	8-729-106-68	TRANSISTOR 2SD1615A-GP			
Q903	8-729-216-31	TRANSISTOR 2SA1163-G			
Q904	8-729-230-63	TRANSISTOR 2SC4116-YG			
		< RESISTOR >			
R901	1-216-817-11	METAL CHIP	470	5%	1/16W
R902	1-216-817-11	METAL CHIP	470	5%	1/16W
R903	1-216-057-00	METAL CHIP	2.2K	5%	1/10W
R906	1-216-813-11	METAL CHIP	220	5%	1/16W
R907	1-216-845-11	METAL CHIP	100K	5%	1/16W
R908	1-216-852-11	METAL CHIP	390K	5%	1/16W
R909	1-216-833-11	METAL CHIP	10K	5%	1/16W
R910	1-216-835-11	METAL CHIP	15K	5%	1/16W
R912	1-216-857-11	METAL CHIP	1M	5%	1/16W
R916	1-218-881-11	METAL GLAZE	27K	0.50%	1/16W
		(TRV14E/TRV24E/TRV44E)			
R916	1-218-879-11	METAL GLAZE	22K	0.50%	1/16W
		(TRV32/TRV34/TRV44/TRV52/TRV312/TRV512)			
R917	1-218-893-11	METAL GLAZE	82K	0.50%	1/16W
		(TRV14E/TRV24E/TRV44E)			
R917	1-218-891-11	METAL GLAZE	68K	0.50%	1/16W
		(TRV32/TRV34/TRV44/TRV52/TRV312/TRV512)			
R918	1-216-829-11	METAL CHIP	4.7K	5%	1/16W
R919	1-216-839-11	METAL CHIP	33K	5%	1/16W
R920	1-216-837-11	METAL CHIP	22K	5%	1/16W
R921	1-216-795-11	METAL GLAZE	6.8	5%	1/16W
R922	1-216-847-11	METAL CHIP	150K	5%	1/16W
R923	1-216-857-11	METAL CHIP	1M	5%	1/16W
R924	1-216-862-11	METAL GLAZE	2.7M	5%	1/16W
R925	1-216-862-11	METAL GLAZE	2.7M	5%	1/16W
R926	1-216-821-11	METAL CHIP	1K	5%	1/16W
R927	1-216-821-11	METAL CHIP	1K	5%	1/16W
R928	1-216-827-11	METAL CHIP	3.3K	5%	1/16W
R929	1-216-818-11	METAL CHIP	560	5%	1/16W
R930	1-216-791-11	METAL CHIP	3.3	5%	1/16W
R931	1-217-671-11	METAL CHIP	1	5%	1/10W
R932	1-216-829-11	METAL CHIP	4.7K	5%	1/16W
		< VARIABLE RESISTOR >			
RV904	1-238-862-11	RES, ADJ, CERMET 1M			
RV905	1-238-852-11	RES, ADJ, CERMET 470			
		< TRANSFORMER >			
⚠T901	1-453-124-11	TRANSFORMER ASSY, FLYBACK			
		< SOCKET >			
⚠W901	1-540-019-21	SOCKET ASSY, CRT			
	A-7073-084-A	VF-109 BOARD, COMPLETE (TRV53)			
		**********			
		(Ref.No.7,000 Series)			
		< CAPACITOR >			
C851	1-162-974-11	CERAMIC CHIP	0.01uF		50V
C852	1-162-974-11	CERAMIC CHIP	0.01uF		50V
C853	1-104-916-11	TANTAL. CHIP	6.8uF	20%	20V
C854	1-164-227-11	CERAMIC CHIP	0.022uF	10%	25V
C855	1-162-974-11	CERAMIC CHIP	0.01uF		50V
C856	1-135-259-11	TANTAL. CHIP	10uF	20%	6.3V
C857	1-164-676-11	CERAMIC CHIP	2200PF	5%	16V
C858	1-135-181-21	TANTALUM CHIP	4.7uF	20%	6.3V
C859	1-164-227-11	CERAMIC CHIP	0.022uF	10%	25V
C860	1-162-970-11	CERAMIC CHIP	0.01uF	10%	25V
C865	1-164-217-11	CERAMIC CHIP	150PF	5%	50V
C867	1-107-682-11	CERAMIC CHIP	1uF	10%	16V
C868	1-165-128-11	CERAMIC CHIP	0.22uF		16V
C870	1-162-974-11	CERAMIC CHIP	0.01uF		50V
C871	1-107-826-11	CERAMIC CHIP	0.1uF	10%	16V
		< CONNECTOR >			
CN851	1-573-350-11	CONNECTOR, FFC/FPC 10P			
* CN852	1-573-984-11	CONNECTOR, BOARD TO BOARD 10P			

Note :
The components identified by mark ⚠ or dotted line with mark ⚠ are critical for safety.
Replace only with part number specified.

Note :
Les composants identifiés par une marque ⚠ sont critiques pour la sécurité.
Ne les remplacer que par une pièce portant le numéro spécifie.

Ref. No.	Part No.	Description			Remarks
		< DIODE >			
D852	8-719-043-70	DIODE MA6S121-(TX)			
D853	8-719-404-49	DIODE MA111			
		< IC >			
IC851	8-759-097-75	IC MB3789PFV-G-BND-ER			
IC852	8-759-510-71	IC BA10358F-E2			
		< COIL >			
L853	1-412-033-11	INDUCTOR CHIP 220uH			
		< TRANSISTOR >			
Q853	8-729-028-81	TRANSISTOR DTA123JUA-T106			
		< RESISTOR >			
R852	1-216-841-11	METAL CHIP	47K	5%	1/16W
R853	1-218-899-11	METAL GLAZE	150K	0.50%	1/16W
R854	1-218-903-11	METAL GLAZE	220K	0.50%	1/16W
R855	1-216-834-11	METAL CHIP	12K	5%	1/16W
R856	1-218-899-11	METAL GLAZE	150K	0.50%	1/16W
R857	1-218-905-11	METAL GLAZE	270K	0.50%	1/16W
R858	1-216-834-11	METAL CHIP	12K	5%	1/16W
R859	1-218-901-11	METAL GLAZE	180K	0.50%	1/16W
R860	1-218-887-11	METAL GLAZE	47K	0.50%	1/16W
R861	1-216-843-11	METAL CHIP	68K	5%	1/16W
R862	1-216-838-11	METAL CHIP	27K	5%	1/16W
R863	1-216-847-11	METAL CHIP	150K	5%	1/16W
R864	1-216-841-11	METAL CHIP	47K	5%	1/16W
R865	1-216-839-11	METAL CHIP	33K	5%	1/16W
R866	1-216-846-11	METAL CHIP	120K	5%	1/16W
R867	1-216-845-11	METAL CHIP	100K	5%	1/16W
R868	1-216-841-11	METAL CHIP	47K	5%	1/16W
R869	1-216-843-11	METAL CHIP	68K	5%	1/16W
R870	1-216-842-11	METAL CHIP	56K	5%	1/16W
R871	1-216-850-11	METAL CHIP	270K	5%	1/16W
R872	1-216-833-11	METAL CHIP	10K	5%	1/16W
R873	1-216-851-11	METAL CHIP	330K	5%	1/16W
R874	1-216-847-11	METAL CHIP	150K	5%	1/16W
R875	1-216-822-11	METAL CHIP	1.2K	5%	1/16W
R879	1-216-837-11	METAL CHIP	22K	5%	1/16W
R881	1-216-853-11	METAL CHIP	470K	5%	1/16W
R891	1-216-296-91	CONDUCTOR, CHIP (3216)			

	A-7073-085-A	VF-110 BOARD, COMPLETE (TRV53)			
		**********			
		(Ref.No.7,000 Series)			
		< CAPACITOR >			
C701	1-162-974-11	CERAMIC CHIP	0.01uF		50V
C702	1-162-974-11	CERAMIC CHIP	0.01uF		50V
C703	1-162-974-11	CERAMIC CHIP	0.01uF		50V
C704	1-107-682-11	CERAMIC CHIP	1uF	10%	16V
C705	1-135-259-11	TANTAL. CHIP	10uF	20%	6.3V
C706	1-162-969-11	CERAMIC CHIP	0.0068uF	10%	25V
C708	1-107-682-11	CERAMIC CHIP	1uF	10%	16V
C709	1-162-974-11	CERAMIC CHIP	0.01uF		50V
C710	1-162-919-11	CERAMIC CHIP	22PF	5%	50V
C711	1-162-974-11	CERAMIC CHIP	0.01uF		50V
C712	1-135-259-11	TANTAL. CHIP	10uF	20%	6.3V
C713	1-164-156-11	CERAMIC CHIP	0.1uF		25V
C714	1-162-974-11	CERAMIC CHIP	0.01uF		50V
C715	1-162-974-11	CERAMIC CHIP	0.01uF		50V
C717	1-162-974-11	CERAMIC CHIP	0.01uF		50V
C718	1-165-176-11	CERAMIC CHIP	0.047uF	10%	16V
C719	1-135-259-11	TANTAL. CHIP	10uF	20%	6.3V
C723	1-162-974-11	CERAMIC CHIP	0.01uF		50V
C724	1-164-227-11	CERAMIC CHIP	0.022uF	10%	25V
C725	1-162-974-11	CERAMIC CHIP	0.01uF		50V
C728	1-162-974-11	CERAMIC CHIP	0.01uF		50V
C729	1-163-077-00	CERAMIC CHIP	0.1uF	10%	25V
C730	1-163-077-00	CERAMIC CHIP	0.1uF	10%	25V
C731	1-163-077-00	CERAMIC CHIP	0.1uF	10%	25V
C732	1-115-156-11	CERAMIC CHIP	1uF		10V
C733	1-165-320-11	CERAMIC CHIP	0.47uF	10%	16V
C734	1-164-156-11	CERAMIC CHIP	0.1uF		25V
C735	1-162-974-11	CERAMIC CHIP	0.01uF		50V
C736	1-135-179-21	TANTAL. CHIP	2.2uF	20%	16V
C737	1-162-974-11	CERAMIC CHIP	0.01uF		50V
C738	1-162-974-11	CERAMIC CHIP	0.01uF		50V
C739	1-162-967-11	CERAMIC CHIP	0.0033uF	10%	50V
C740	1-135-181-21	TANTALUM CHIP	4.7uF	20%	6.3V
C741	1-162-970-11	CERAMIC CHIP	0.01uF	10%	25V
C742	1-135-259-11	TANTAL. CHIP	10uF	20%	6.3V
C744	1-162-927-11	CERAMIC CHIP	100PF	5%	50V
C745	1-164-357-11	CERAMIC CHIP	1000PF	5%	50V
C746	1-162-974-11	CERAMIC CHIP	0.01uF		50V
C747	1-164-156-11	CERAMIC CHIP	0.1uF		25V
C748	1-164-346-11	CERAMIC CHIP	1uF		16V
C749	1-115-156-11	CERAMIC CHIP	1uF		10V
C750	1-162-974-11	CERAMIC CHIP	0.01uF		50V
C751	1-107-688-11	TANTAL. CHIP	1.5uF	20%	20V
C752	1-162-974-11	CERAMIC CHIP	0.01uF		50V
		< CONNECTOR >			
CN701	1-766-346-21	CONNECTOR, FFC/FPC 16P			
* CN702	1-573-984-11	CONNECTOR, BOARD TO BOARD 10P			
CN703	1-573-925-11	CONNECTOR, FFC/FPC (ZIF) 16P			
		< DIODE >			
D701	8-719-951-21	DIODE PR1102W-TR			
D702	8-719-404-49	DIODE MA111			
D704	8-713-102-80	DIODE 1T369-01-T8A			
		< IC >			
IC701	8-752-067-59	IC CXA1785R-T4			
IC702	8-759-251-40	IC MB88E346PFV-G-BND-ER			
IC703	8-759-075-66	IC TA75S01F(TE85R)			
IC704	8-752-377-97	IC CXD2411AR-T4			
		< COIL >			
L701	1-412-951-11	INDUCTOR 10uH			
L702	1-412-962-11	INDUCTOR 82uH			
L704	1-412-959-11	INDUCTOR 47uH			
L707	1-412-949-21	INDUCTOR 6.8uH			
		< TRANSISTOR >			
Q703	8-729-427-74	TRANSISTOR XP4601			

Ref. No.	Part No.	Description			Remarks
		< RESISTOR >			
R701	1-216-819-11	METAL CHIP	680	5%	1/16W
R703	1-218-877-11	METAL GLAZE	18K	0.50%	1/16W
R704	1-216-857-11	METAL CHIP	1M	5%	1/16W
R705	1-216-842-11	METAL CHIP	56K	5%	1/16W
R707	1-216-841-11	METAL CHIP	47K	5%	1/16W
R708	1-216-833-11	METAL CHIP	10K	5%	1/16W
R710	1-216-821-11	METAL CHIP	1K	5%	1/16W
R711	1-216-814-11	METAL CHIP	270	5%	1/16W
R712	1-216-821-11	METAL CHIP	1K	5%	1/16W
R716	1-216-832-11	METAL CHIP	8.2K	5%	1/16W
R717	1-216-844-11	METAL CHIP	82K	5%	1/16W
R718	1-216-845-11	METAL CHIP	100K	5%	1/16W
R719	1-216-850-11	METAL CHIP	270K	5%	1/16W
R721	1-216-833-11	METAL CHIP	10K	5%	1/16W
R723	1-220-397-11	METAL GLAZE	4.7M	5%	1/16W
R724	1-216-839-11	METAL CHIP	33K	5%	1/16W
R725	1-216-839-11	METAL CHIP	33K	5%	1/16W
R726	1-216-864-11	METAL CHIP	0	5%	1/16W
R727	1-216-840-11	METAL CHIP	39K	5%	1/16W
R728	1-216-839-11	METAL CHIP	33K	5%	1/16W
R729	1-216-839-11	METAL CHIP	33K	5%	1/16W
R730	1-216-840-11	METAL CHIP	39K	5%	1/16W
R731	1-216-849-11	METAL CHIP	220K	5%	1/16W
R732	1-216-853-11	METAL CHIP	470K	5%	1/16W
R734	1-216-825-11	METAL CHIP	2.2K	5%	1/16W
R735	1-216-839-11	METAL CHIP	33K	5%	1/16W
R736	1-216-839-11	METAL CHIP	33K	5%	1/16W
R737	1-216-807-11	METAL CHIP	68	5%	1/16W
R738	1-216-807-11	METAL CHIP	68	5%	1/16W
R739	1-216-807-11	METAL CHIP	68	5%	1/16W
R740	1-216-833-11	METAL CHIP	10K	5%	1/16W
R746	1-216-839-11	METAL CHIP	33K	5%	1/16W
R748	1-216-864-11	METAL CHIP	0	5%	1/16W
R749	1-216-833-11	METAL CHIP	10K	5%	1/16W
R750	1-216-841-11	METAL CHIP	47K	5%	1/16W
R753	1-216-839-11	METAL CHIP	33K	5%	1/16W
R754	1-216-839-11	METAL CHIP	33K	5%	1/16W
R755	1-216-839-11	METAL CHIP	33K	5%	1/16W
R756	1-216-833-11	METAL CHIP	10K	5%	1/16W
R757	1-216-839-11	METAL CHIP	33K	5%	1/16W
R761	1-216-821-11	METAL CHIP	1K	5%	1/16W
R762	1-216-838-11	METAL CHIP	27K	5%	1/16W
R763	1-216-842-11	METAL CHIP	56K	5%	1/16W
R768	1-218-875-11	METAL GLAZE	15K	0.50%	1/16W
R769	1-218-905-11	METAL GLAZE	270K	0.50%	1/16W
R770	1-216-849-11	METAL CHIP	220K	5%	1/16W
R771	1-216-837-11	METAL CHIP	22K	5%	1/16W
		< VIBRATOR >			
X701	1-579-466-11	VIBRATOR, CRYSTAL 3.58MHz			

Ref. No.	Part No.	Description	Remarks
		MISCELLANEOUS	
		**********	
61	1-542-312-11	BOOK, MICRO	
73	1-782-154-11	CABLE, FLEXIBLE FLAT 12P	
101	1-475-068-11	SWITCH BLOCK, CONTROL(MF-7800)	
116	1-505-291-11	SPEAKER (DIA 2.8CM)	
118	1-782-153-11	CABLE, FLEXIBLE FLAT 45P	
⚠128	1-517-654-11	TUBE, FLUORESCENT COLD CATHODE	(TRV32/TRV34/TRV53/TRV312)
⚠128	1-517-655-11	TUBE, FLUORESCENT COLD CATHODE	(TRV44/TRV52/TRV512/TRV44E)
⚠128	1-517-524-51	TUBE, FLUORESCENT COLD CATHODE	(TRV14E/TRV24E)
129	1-801-667-11	INDICATOR MODULE, LIQUID CRYST	(TRV44/TRV52/TRV512/TRV44E)
129	1-801-669-11	INDICATOR MODULE, LIQUID CRYST	(TRV32/TRV34/TRV53/TRV312)
129	1-801-666-11	INDICATOR MODULE, LIQUID CRYST (TRV14E)	
131	1-957-150-11	HARNESS (CP-74)	
131	1-957-152-11	HARNESS (CP-75)	
132	1-957-151-11	HARNESS (CS-111)(TRV24E)	
132	1-957-153-11	HARNESS (CS-112)	
137	1-801-697-11	DISPLAY PANEL, LIQUID CRYSTAL	
137	1-801-697-21	DISPLAY PANEL, LIQUID CRYSTAL	
141	1-660-433-11	FP-410 FLEXIBLE BOARD	
156	1-782-155-11	CABLE, FLEXIBLE FLAT 16P	
158	1-665-151-11	FP-550 FLEXIBLE BOARD	
160	1-665-150-11	FP-549 FLEXIBLE BOARD (EXCEPT TRV14E)	
162	8-848-710-01	LENS, ZOOM (VCL-4214VA)	
164	1-547-787-41	FILTER BLOCK, OPTICAL (EXCEPT TRV14E)	
164	1-547-924-41	FILTER BLOCK, OPTICAL (TRV14E)	
208	8-756-016-10	LCX005BK-5	
212	1-665-152-11	FP-551 FLEXIBLE BOARD	
258	1-782-156-11	CABLE, FLEXIBLE FLAT 5P	
⚠259	1-452-673-31	CRT ASSY (M01KXX90WB)	
762	1-657-786-11	FP-221 FLEXIBLE BOARD	
803	1-657-785-11	FP-248 FLEXIBLE BOARD	
817	1-657-784-11	FP-220 FLEXIBLE BOARD	
D001	8-719-988-42	DIODE GL453S	
IC401	A-7030-638-A	CCD BLOCK ASSY (MN37240FP)	(TRV32/TRV52/TRV53/TRV312/TRV512)
IC401	A-7030-779-A	CCD BLOCK ASSY (ICX207AK-13)(TRV14E)	
IC401	A-7030-782-A	CCD BLOCK ASSY (ICX211AK-43)	(TRV24E/TRV44E)
IC401	A-7030-791-A	CCD BLOCK ASSY (ICX209AK-43)	(TRV34/TRV44)
M901	A-7048-851-A	DRUM BLOCK ASSY (DGH-0D5A-R)(PAL)	
M901	A-7048-849-A	DRUM BLOCK ASSY (DGH-0D4A-R)(NTSC)	
M902	8-835-531-32	MOTOR, DC SCE-0601A/C-NP (CAPSTAN)	
M903	X-3945-401-1	MOTOR ASSY, DC (LOADING)	
S003	1-762-441-21	SWITCH, ROTARY (ZOOM SW)	
S901	1-762-436-15	SWITCH, ROTARY (ENCODER)	

Note :
The components identified by mark ⚠ or dotted line with mark ⚠ are critical for safety.
Replace only with part number specified.

Note :
Les composants identifiés par une marque ⚠ sont critiques pour la sécurité.
Ne les remplacer que par une pièce portant le numéro spécifie.

Ref. No.	Part No.	Description	Remarks
		ACCESSORIES & PACKING MATERIALS	
		**********	
⚠	A-7009-226-A	AC-V16 (US,Canadian)	
⚠	A-7009-227-B	AC-V16 (E,CHINESE)	
⚠	A-7009-230-B	AC-V16 (Australian)	
⚠	A-7009-231-A	AC-V16 (Hong Kong)	
⚠	A-7009-232-A	AC-V16 (Tourist)	
⚠	A-7009-746-A	AC-V17 (AEP)	
⚠	A-7009-747-A	AC-V17 (UK)	
	A-7092-608-A	CASE (N) ASSY, BATTERY	(TRV14E:AEP/TRV24E:AEP)
	A-7092-697-A	CASE (N) ASSY (2), BATTERY	(TRV32/TRV52/TRV53/TRV312)
	1-473-342-11	REMOTE COMMANDER (RMT-713)	
⚠	1-569-008-11	ADAPTOR, CONVERSION 2P	(TRV34/TRV44/TRV14E:E/TRV24E:E/TRV44E)
	1-574-039-21	CORD, CONNECTION (AV)1.5m	(TRV32/TRV53/TRV312/TRV14E/TRV24E)
	1-575-334-11	CORD, CONNECTION (AV STEREO)1.5m	(TRV34/TRV44/TRV52/TRV512/TRV44E)
	1-764-622-11	ADAPTOR, CONVERSION	(TRV14E:AEP/TRV24E:AEP)
	1-769-285-21	CORD, CONNECTION	(TRV34/TRV44/TRV52/TRV512/TRV44E)
	1-770-783-11	CONNECTOR, CONVERSION	(TRV14E:AEP/TRV24E:AEP)
	3-800-844-11	INSTRUCTION	(TRV14E:AEP/TRV24E:AEP)
	3-859-266-11	MANUAL, INSTRUCTION (ENGLISH/RUSSIAN)	(TRV14E:E/TRV24E:E)
	3-859-266-21	MANUAL, INSTRUCTION (FRENCH/GERMAN)	(TRV14E:E/TRV24E:E)
	3-859-266-31	MANUAL, INSTRUCTION (ARABIC/PERSIAN)	(TRV14E:E/TRV24E:E)
	3-859-266-41	MANUAL, INSTRUCTION (CHINESE)	(TRV14E:E/TRV24E:E)
	3-859-595-11	MANUAL, INSTRUCTION (ENGLISH)	(TRV32/TRV52/TRV53/TRV312/TRV512)
	3-859-596-11	MANUAL, INSTRUCTION (ENGLISH/RUSSIAN)	(TRV44E)
	3-859-596-21	MANUAL, INSTRUCTION (FRENCH/GERMAN)	(TRV44E)
	3-859-596-31	MANUAL, INSTRUCTION (ARABIC/PERSIAN)	(TRV44E)
	3-859-596-41	MANUAL, INSTRUCTION (CHINESE) (TRV44E)	
	3-859-596-51	MANUAL, INSTRUCTION (ENGLISH/SPANISH)	(TRV34/TRV44)
	3-859-596-61	MANUAL, INSTRUCTION (CHINESE)	(TRV34/TRV44)
	3-859-598-21	MANUAL, INSTRUCTION (GERMAN/ITALIAN)	(TRV14E:AEP/TRV24E:AEP)
	3-859-598-41	MANUAL, INSTRUCTION	(SPANISH/PORTUGUESE) (TRV14E:AEP/TRV24E:AEP)
	3-976-900-01	CASE (506), SOFT (TRV34PK)	
	3-968-092-01	PAT, PROTECTION (TRV34PK)	
	3-947-969-21	BELT (S), SHOULDER	
*	3-975-401-01	CUSHION (LOWER)	
*	3-975-402-01	CUSHION, ACC	
*	3-976-009-01	INDIVIDUAL CARTON (TRV14E:E)	
*	3-976-009-11	INDIVIDUAL CARTON (TRV14E:AEP)	
*	3-976-009-21	INDIVIDUAL CARTON (TRV24E:AEP)	
*	3-976-009-31	INDIVIDUAL CARTON (TRV24E:E)	
*	3-976-009-61	INDIVIDUAL CARTON (TRV44)	
*	3-976-009-71	INDIVIDUAL CARTON (TRV44E)	
*	3-976-009-81	INDIVIDUAL CARTON (TRV34)	
*	3-976-010-21	INDIVIDUAL CARTON (TRV52)	
*	3-976-010-31	INDIVIDUAL CARTON (TRV512)	
*	3-976-010-41	INDIVIDUAL CARTON (TRV53)	
*	3-976-010-51	INDIVIDUAL CARTON (TRV32/TRV312)	
**	NP-33	BATTERY PACK	
**	IFT-R10	AV CORDLESS IR RECIVER	

NOTE.
**MARK PARTS IS AVAILABLE AS AN OPTIONAL ACCESSORY.

Note :	**Note :**
The components identified by mark ⚠ or dotted line with mark ⚠ are critical for safety. Replace only with part number specified.	Les composants identifiés par une marque ⚠ sont critiques pour la sécurité. Ne les remplacer que par une pièce portant le numéro spécifie.

SECTION 6
ADJUSTMENTS

When performing adjustments, refer to the layout diagrams for adjustment related parts beginning from page 6-44.

NT :	NTSC MODEL	ST :	STEREO MODEL
PAL :	PAL MODEL	V. LIGHT :	VIDEO LIGHT TYPE
WIDE :	WIDE (16 : 9) MODEL	IR :	INFRARED RADIATION TYPE
DZ :	DIGITAL ZOOM TYPE	S. SHOT :	STEADY SHOT MODEL
MO :	MONO MODEL		

6-1. CAMERA SECTION ADJUSTMENT

1-1. PREPARATIONS BEFORE ADJUSTMENT

1-1-1. List of service tools

Oscilloscope, Regulated power supply, Vectorscope, Pattern generator
Adjustment screw driver, Color monitor, Digital voltmeter

Ref. No.	Name	Parts Code	Usage
J-1	Filter for color temperature correction (C14)	J-6080-058-A	Auto white balance adjustment/check White balance adjustment/check
J-2	ND filter 1.0 ND filter 0.3	J-6080-808-A J-6080-818-A	White balance check White balance check
J-3	Pattern box PTB-450	J-6082-200-A	
J-4	Color chart for pattern box	J-6020-250-A	
J-5	Siemens star	J-6080-875-A	For checking the flange back
J-6	Adjustment remote commander (RM-95 upgraded) Note	J-6082-053-B	
J-7	Multi CPC	J-6082-311-A	For video section adjustment (VC-188 board CN102)
J-8	Measuring pin tool for viewfinder	J-6082-192-A	For adjusting the viewfinder
J-9	IR receiver jig	J-6082-383-A	For IR section adjustment

Note: If the microprocessor IC in the adjusting remote commander is not the new microprocessor (UPD7503G-C56-12), the pages cannot be switched.
In this case, replace with the new microprocessor (8-759-148-35).

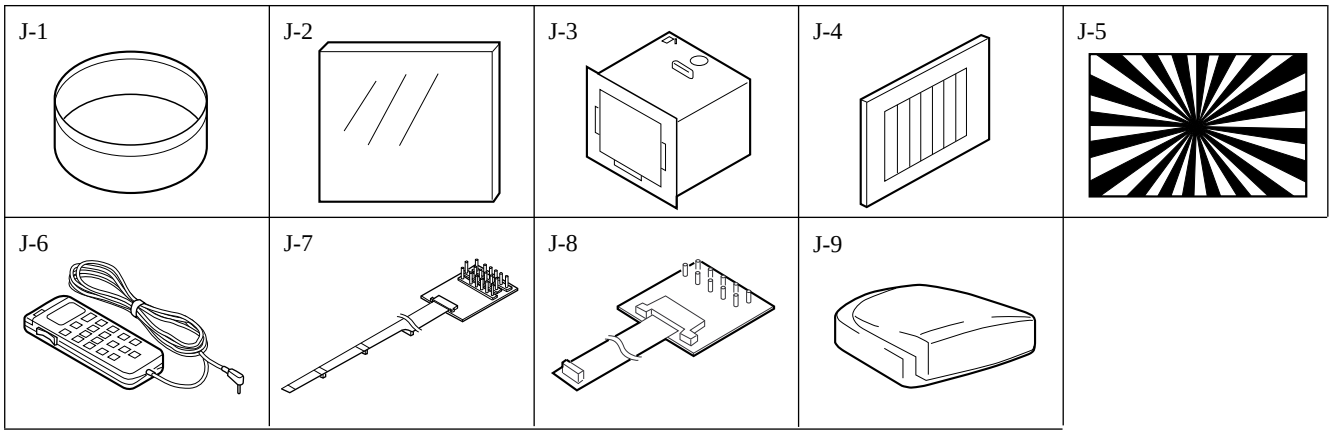

Fig.6-1-1.

1-1-2. Precautions

1. Switch settings

Adjust the switches to the following positions without loading the cassette tape unless otherwise specified.

1) Camera/video power switch
   Operation switch block ····· Camera
2) PROGRAM AE switch ····· AUTO

LCD 2.5"	SD-24 board : S991
	SD-25 board : S1991
LCD 3, 3.5"	PD-76 board : S991
	PD-77 board : S1991

3) D ZOOM switch (MENU) ····· OFF
4) STEADY switch (CF-45/46 board S403) ····· OFF

2. Adjustment sequence

Adjust in the given order.

3. Subject

1) Set the camera and pattern box as shown in Fig. 6-1-2.
2) Color bar chart (Standard picture frame)

- Adjust the picture frame as shown in Fig. 6-1-3.
- Adjust camera zooming and direction until the camera output waveform on the oscilloscope shown in Fig. 6-1-3 (a) and the color picture on the monitor TV shown in Fig. 6-1-3 (b) have been acquired.
- Maintain this setup until adjustment is complete.

3) White pattern (Standard picture frame)
   Remove the color bar chart from the pattern box and adjust the camera setup until the white pattern picture frame is the same size and same position as the color bar chart (the standard picture frame).

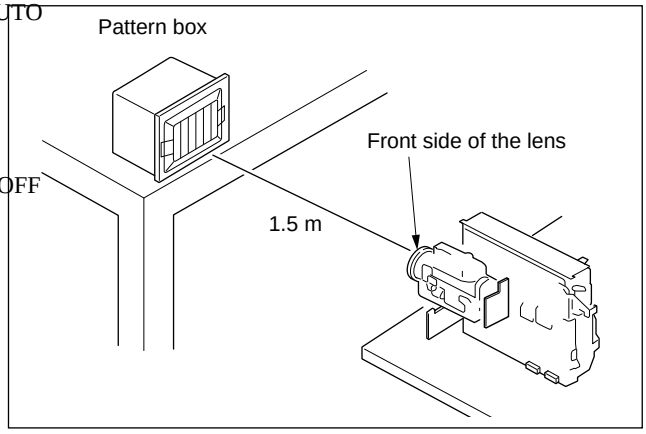

Fig. 6-1-2

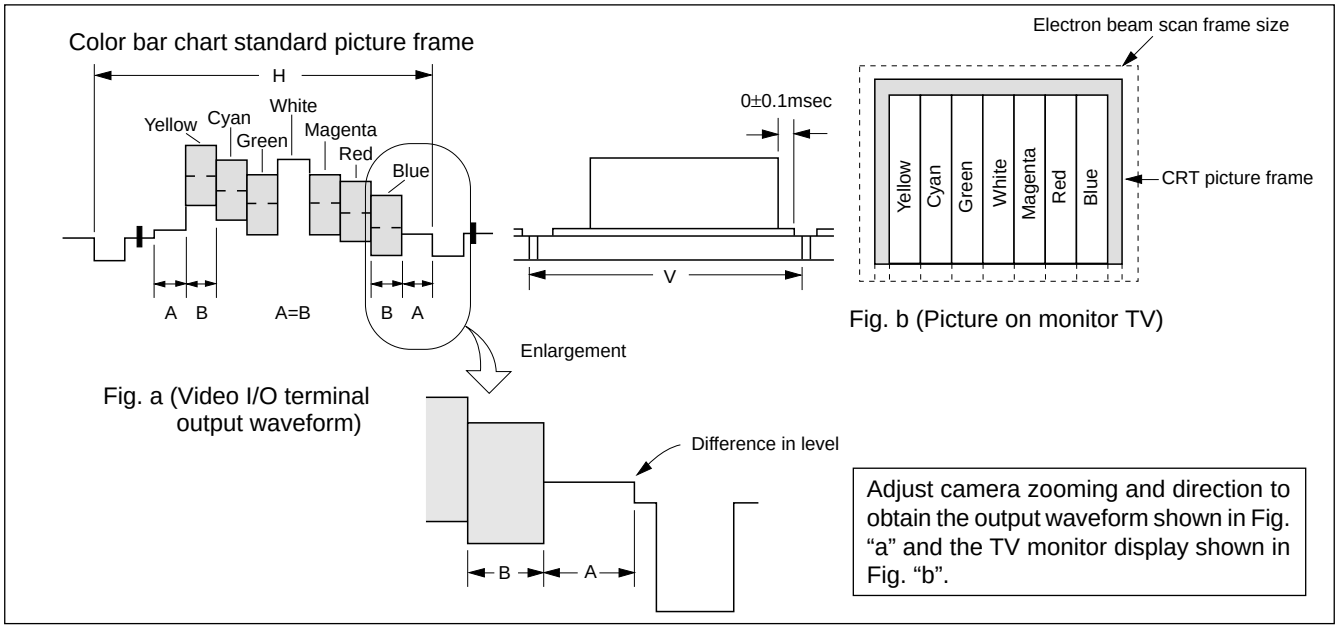

Fig. 6-1-3

4) Chart for flange back adjustment
   Join together a piece of white A0 size paper (1189mm × 841 mm) and a piece of black paper to make the chart shown in Fig. 6-1-4.

Note : Use a non-reflecting and non-glazing vellum paper. The size must be A0 or larger and the joint between the white and black paper must not have any undulations.

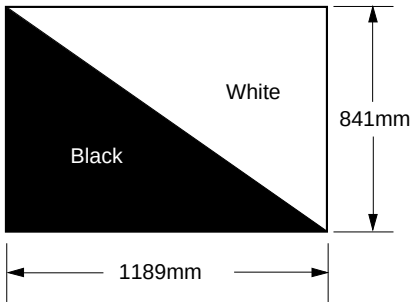

Fig. 6-1-4

1-1-3. Preparations

Note 1 : Refer to "2. Disassembly" for details of how to remove the cabinet and the respective boards.

Note 2 : Removal of the lens block and VC-188 board is not necessary if only adjustments are to be made.

1) Connect the adjustment equipment as shown in Fig. 6-1-5.

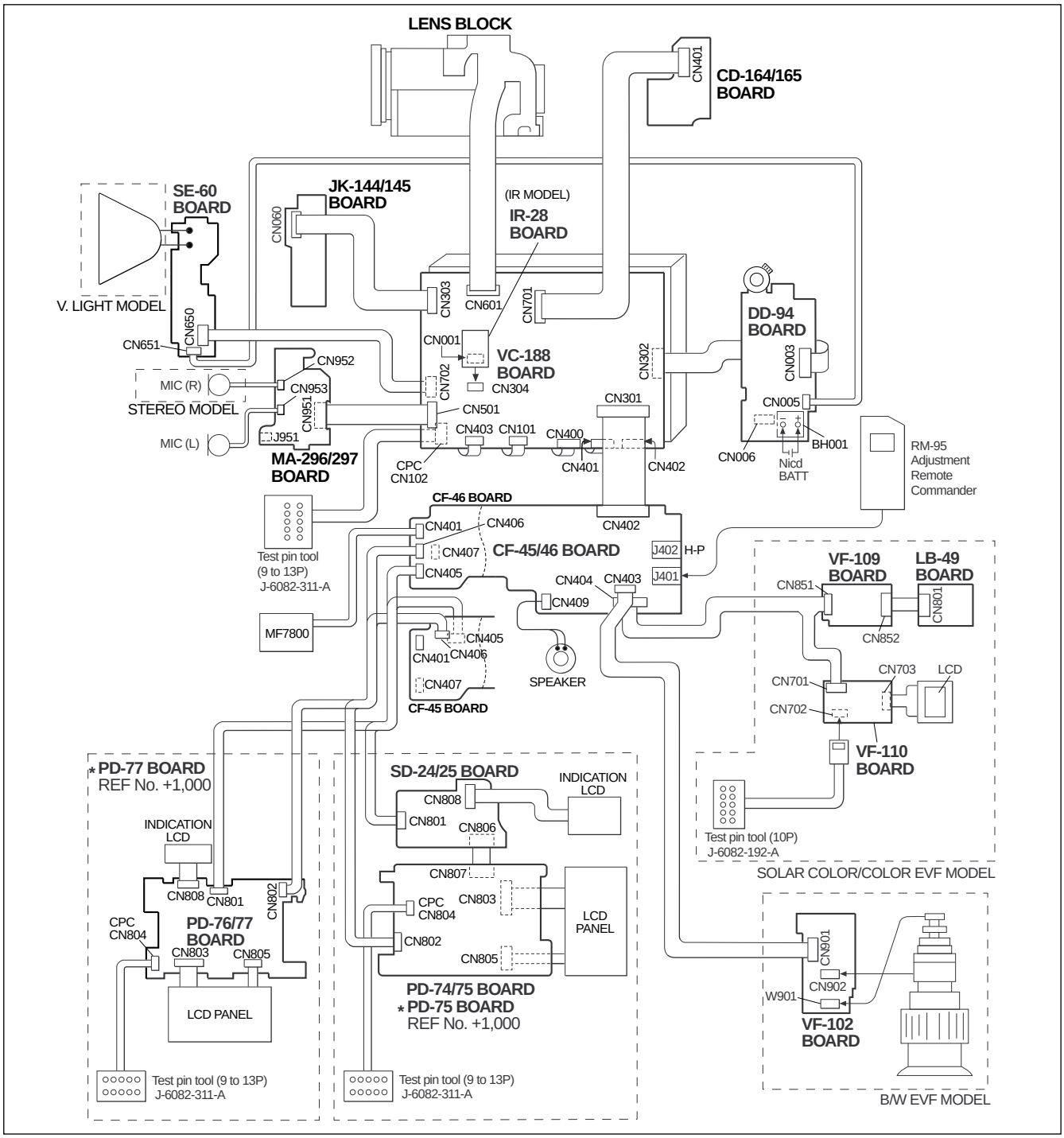

Fig. 6-1-5.

BOARD / TYPE	PD-74	PD-75	PD-76	PD-77	SD-24	SD-25	CF-45	CF-46	MA-296	MA-297	JK-154	JK-155	CD-164	CD-165
2.5 inch LCD	○	—	—	—	○	—	○	—	○	—	○	—	○	—
2.5 inch LCD	—	○	—	—	—	○	○	—	○	—	○	—	○	—
3.5 inch LCD	—	—	○	—	—	—	—	○	—	○	—	○	—	○
3.0 inch LCD	—	—	—	○	—	—	—	○	—	○	—	○	—	○

1-1-4. Adjustment remote commander (RM-95 upgraded)

To perform adjustment, the adjustment data stored in the non-volatile memory must be rewritten using the adjustment remote commander (RM-95 upgraded).

The adjustment remote commander uses the remote commander signal line (LANC) to interactively communicate with the merchandise. The page, address and up/down command data are sent from the adjustment remote commander to the merchandise. In return, the page, address and data are sent to the adjustment remote commander from the merchandise.

1. Using the adjustment remote commander

1) Connect the adjustment remote commander to the LANC terminal (CF-45/46 board J000).
2) Set the NOR-ADJ (or HOLD) switch of the adjustment remote commander to the "ADJ" (or ON) (service) position.
   If the adjustment remote commander is correctly connected, the adjustment remote commander's LED will show the display as shown in Fig. 6-1-6.
3) Bit value discrimination
   It is necessary to discriminate between the bit values with the data displayed on the adjustment remote commander for all following items. Identify whether the bit value is "1" or "0" with the use of the following diagram.

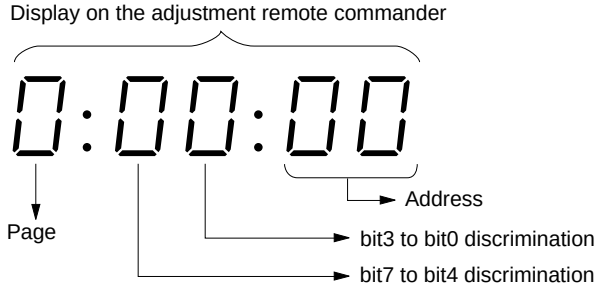

Fig. 6-1-6.

	Display on the adjustment remote commander	Bit values			
		bit3 or bit7	bit2 or bit6	bit1 or bit5	bit0 or bit4
	0	0	0	0	0
	1	0	0	0	1
	2	0	0	1	0
	3	0	0	1	1
	4	0	1	0	0
	5	0	1	0	1
	6	0	1	1	0
	7	0	1	1	1
Ⓐ	8	1	0	0	0
	9	1	0	0	1
	A (R)	1	0	1	0
	B (b)	1	0	1	1
	C (C)	1	1	0	0
	D (d)	1	1	0	1
Ⓑ	E (E)	1	1	1	0
	F (F)	1	1	1	1

(Example) If "8E" is displayed on the adjustment remote commander, the bit values for bit7 to bit4 are shown in the 'A' column, and the bit values for bit3 to bit0 are shown in the 'B' column.

4) The adjustment remote controller is operated as follows:

- Changing the page
  The pages increase when the EDIT SEARCH (+) button is pressed and decrease when the EDIT SEARCH (–) button is pressed. Altogether there are 16 pages from page "0" to page "F".

Hexadecimal notation	0	1	2	3	4	5	6	7	8	9	A	B	C	D	E	F
LCD display	0	1	2	3	4	5	6	7	8	9	A	b	C	d	E	F
Decimal notation after conversion	0	1	2	3	4	5	6	7	8	9	10	11	12	13	14	15

- Changing the address
  The address increases when the FF (▶▶) button is pressed, and decreases when the REW (◀◀) button is pressed. Altogether there are 256 addresses from address "00" to address "FF". Some addresses, which are not used during adjustment, do not appear.
- Taking note the already-stored adjustment data
  The previous adjustment can be erased if the adjustment remote commander is incorrectly handled. To prevent this, it is recommended that all the stored adjustment data be noted down on the attached page F address list.
- Changing the data (Data setting)
  The data increases when the PLAY (►) button is pressed, and decreases when the STOP (■) button is pressed. Altogether there 256 data from data "00" to data "FF".
- Storing the data
  Press the PAUSE button to store the adjustment data (page F) into the non-volatile memory.
  (If the PAUSE button is not pressed after completing the adjustment, the new adjustment data will not be stored in the non-volatile memory.)

5) After completing all adjustments, turn off the main power supply (7.2 V) once. This releases the adjustment mode (all modes except for page F).

[Sequence of Service Models Using the Adjustment Remote Commander]

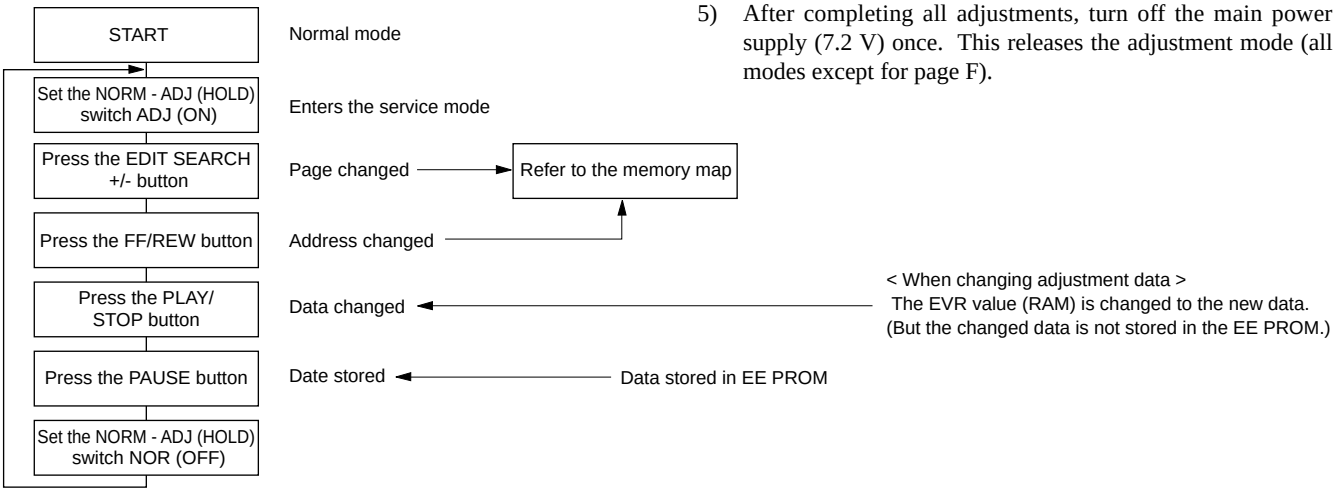

Command Name	Command Function	Normal LANC Command
Page Up	Page + 1	Edit Search +
Page Down	Page – 1	Edit Search –
Direct Page Set	Sets the specified page	Event Clear
Address Up	Address + 1	Fast Forward
Address Down	Address – 1	Rewind
Data Up	Data + 1	Play Back
Data Down	Data – 1	Stop
Store	Stores data in the EE PROM.	Pause

2. Precautions when using the adjustment remote commander

Mishandling of the adjustment remote commander may erase the correct adjustment data which has already been stored in the memory. To prevent this, it is recommended that all adjustment data is noted down on the attached page F address list before starting adjustments in addition to all new adjustment data after the completion of each adjustment step.

1-1-5. Page F Address List

Note 1 : The initial value of the adjustment data is the data immediately after execution of Pages E and F data initialization, and Page F data modification. They are different from the value after all adjustments are executed.

Note 2 : When the arrow mark ← is shown in the memo column of the adjustment data, it indicates that the data of that address is the fixed data (fixed to the initial value).

Note 3 : ∗: Refer to "5. Page F Data Modification". The data following the asterisk (∗) mark indicates the initial data.

Address	Adjustment Data	
	Initial Value	Memo Column
00	00	←
01	00	←
02	00	←
03	*	←
04	*	←
05	*	←
06	*	←
07	*	←
08	*	←
09	00	←
0A	00	←
0B	00	←
0C	00	←
0D	00	←
0E	00	←
0F	00	←
10	00	←
11	00	←
12	00	←
13	00	←
14	00	←
15	00	←
16	00	←
17	*	←
18	*	←
19	00	←
1A	*	←
1B	*	←
1C	15	←
1D	48	←
1E	03	←
1F	*	←
20	*	←
21	00	←
22	00	
23	0C	
24	00	
25	0C	
26	*	
27	*	
28	*	
29	*	
2A	*	
2B	80	

Address	Adjustment Data	
	Initial Value	Memo Column
2C	40	
2D	40	
2E	80	
2F	9E : PAL, B9 : NT	
30	68 : PAL, 53 : NT	
31	7E : PAL, 7D : NT	
32	85	
33	64	
34	80	
35	AD : PAL, 9E : NT	
36	9E : PAL, 8E : NT	
37	87 : PAL, 85 : NT	
38	*	
39	*	
3A	*	
3B	*	
3C	58	
3D	60	
3E	48	
3F	40	
40	80	
41	80	
42	40	
43	00	
44	2D	
45	D3	
46	2D	
47	*	←
48	*	←
49	00	
4A	3C	
4B	00	
4C	3E	
4D	E0	←
4E	8F	
4F	6C	
50	36	
51	3C	
52	A6	
53	1A	
54	15	
55	24	
56	8B	
57	11	

PAL : 510 → CCD : 510 H type, PAL model
NT : 510 → CCD : 510 H type, NTSC model
PAL : 760 → CCD : 760 H type, PAL model
NT : 760 → CCD : 760 H type, NTSC model

510 H type : TRV14E model
760 H type : EXCEPT TRV14E model

Address	Adjustment Data	
	Initial Value	Memo Column
58	25	
59	19	
5A	80	
5B	80	
5C	80	
5D	80	
5E	80	
5F	*	←
60	*	←
61	*	←
62	*	←
63	*	←
64	*	←
65	*	←
66	*	←
67	80	←
68	*	←
69	*	←
6A	*	←
6B	*	←
6C	*	←
6D	*	←
6E	*	←
6F	*	←
70	*	←
71	*	←
72	80	←
73	80	←
74	*	←
75	1A : PAL/510 17 : NT/510 1A : PAL/760 19 : NT/760	←
76	*	←
77	*	←
78	*	←
79	*	←
7A	A2 : PAL/510 A2 : NT/510 A1 : PAL/760 A2 : NT/760	←
7B	*A3	←
7C	*BA	←
7D	41 : PAL/510 46 : NT/510 20 : PAL/760 20 : NT/760	←
7E	*	←
7F	*	←

Address	Adjustment Data	
	Initial Value	Memo Column
80	*	←
81	*	←
82	*	←
83	*	←
84	*	←
85	*	←
86	83	←
87	67	←
88	*	←
89	5C	←
8A	4A	←
8B	*	←
8C	5C	←
8D	*	←
8E	33	←
8F	* A0 : V. LIGHT/NT A2 : V. LIGHT/PAL	←
90	*	←
91	*	←
92	28 : PAL/510 30 : NT/510 28 : PAL/760 30 : NT/760	←
93	1A : PAL/510 20 : NT/510 1A PAL/760 20 : NT/760	←
94	6A	←
95	58	←
96	*	←
97	33	←
98	04	←
99	04	←
9A	A2	←
9B	88	←
9C	65	←
9D	44	←
9E	55	←
9F	04	←
A0	1F	←
A1	20	
A2	*	←
A3	B0	←
A4~CB		←
CC~E3		←
E4~EF	00	
F0~FF		

1-2. CAMERA SYSTEM ADJUSTMENTS

1. Adjustment points when major parts have been replaced

When the CCD imager or lens block is replaced, adjust the items indicated by ○ in the following table.

	When the CCD imager is replaced	When the lens block is replaced
HALL adjustment		○
Flange back adjustment	○	○
IRIS IN/OUT adjustment	○	○
MAX GAIN adjustment	○	
Color reproduction adjustment	○	
Auto white balance reference data input	○	
Auto white balance adjustment	○	

3. Preparation for adjustment

Objective: Make sure that the camera can be operated from the LANC line even if the mode control microprocessor's A/D port is left open.

Mode	Any Mode
Measuring Equipment	Remote controller RM-95 upgraded for LANC
Adjustment Page	Page 6, page F
Adjustment Address	00, 02

Adjustment procedure:

Order	Page	Address	Data	Procedure
1				Turn the main power switch ON.
2	6	00	01	After setting the data, press the PAUSE button.
3	F	02	21	After setting the data, press the PAUSE button.
4				Turn off the UNREG power supply once, then turn it on.
5	6	00	00	After setting the data, press the PAUSE button.

Note 1 : If data 01 is set to page 6, address 00, the adjustment for page F, address 01 to A3 can also be performed.

Note 2 : When all adjustments of the camera system is completed, set data 00 to the page F, address 02.

2. Power supply voltage check (VC-188 board)

Subject	Any subject
Measuring equipment	Digital voltmeter
DIG3V check	
Measurement Point	CN301 ㉓ Pin (CN301 ⑭, ⑮Pin: MT GND)
Specification Value	3.15 ± 0.1Vdc
MT5V check	
Measurement Point	CN301 ⑯ Pin (CN301 ⑭, ⑮Pin: VTR GND)
Specification Value	4.70 ± 0.15Vdc
CAM15V check	
Measurement Point	CN701 ⑬ Pin (CN701 ⑯ Pin: GND)
Specification Value	14.95 ± 0.4Vdc
CAM –7.5V check	
Measurement Point	CN701 ⑩ Pin (CN701 ⑯ Pin: GND)
Specification Value	–7.2 ± 0.5Vdc

Check procedure

1) Check that all power supply voltages satisfy the specified value. If not, refer to "Video circuit, Power supply block adjustment".

4. Initialization of page F data

Note 1 : Execute the initialization of page F only when the non-volatile memory (VC-188 board IC401 EE PROM) is replaced.

Note 2 : If the page F data has been initialized, all adjustment items of the camera section must be executed again.

Initializing procedure:

Order	Page	Address	Data	Procedure
1				Turn OFF and ON the main power supply. (Preparation)
2	6	00	01	After setting the data 01 to the address, press the PAUSE button.
3	6	11		Confirm that the data is 00.
4	6	01	2D	After setting the data, Press the PAUSE button. (Execution of page F data initialization. By this operation, all the data from address 01 to EF are initialized.)
5	6	11		Confirm that the data is 01.

Works required after initialization

Order	Page	Address	Data	Procedure
1	6	01	00	After setting the data, Press the PAUSE button.
2	6	00	00	After setting the data, Press the PAUSE button. (End)
3				Perform the next item “5. Page F Data Modifications”, then execute all adjustment items of the camera section.

Related Adjustments:

All adjustments of camera block.

5. Page F data modification

All the data of page F are automatically initialized if the initialization is executed. However, among the initialized data, the following addresses require manual modification of data after the page F data is initialized.

Modification procedure:

Address	Data												
	TRV32	TRV34	TRV44	TRV52	TRV53	TRV312	TRV512	TRV14E		TRV24E			TRV44E
	—	—	—	—	—	—	—	AEP	EXCEPT AEP	AEP	UK	E/AUS/ HK	—
03	02	03	←	02	←	←	←	04	05	04	←	05	←
04	E9	ED	←	ED	E9	←	ED	99	←	E9	←	←	ED
05	4C	←	←	←	←	←	←	4C	←	←	←	←	←
06	04	←	←	24	2C	04	24	04	←	←	←	←	←
07	20	←	←	←	←	←	←	20	←	←	←	←	←
08	00	←	←	←	←	←	←	04	←	←	←	←	←
17	00	←	←	←	←	03	05	00	←	←	←	←	←
18	32	34	44	52	53	12	←	14	←	24	←	←	44
1A	00	01	01	00	←	←	←	00	←	00	01	00	01
1B	30	80	80	30	←	←	←	15	←	30	←	←	80
1D	31	←	34	←	31	←	34	31	←	22	←	←	34
1F	07	←	←	←	←	←	←	00	←	07	←	←	←
20	04	←	←	←	←	←	←	74	←	04	←	←	←
26	9B	←	←	←	←	←	←	9B	←	←	←	←	←
27	92	←	←	←	←	←	←	92	←	←	←	←	←
28	8F	←	←	←	←	←	←	8F	←	←	←	←	←
29	8A	←	←	←	←	←	←	8A	←	←	←	←	←
2A	84	←	←	←	←	←	←	84	←	←	←	←	←
38	DD	←	←	←	←	←	←	D8	←	←	←	←	←
39	DD	←	←	←	←	←	←	D8	←	←	←	←	←
3A	DD	←	←	←	←	←	←	C6	←	←	←	←	←
3B	DD	←	←	←	←	←	←	C1	←	←	←	←	←
47	FE	FF	←	FE	←	←	←	FF	←	←	←	←	←
48	FC	F6	←	FC	←	←	←	F1	←	←	←	F4	←
5F	CA	←	←	←	←	←	←	AA	←	←	←	←	←
60	AC	←	←	←	←	←	←	8C	←	←	←	←	←
61	99	77	←	77	99	←	77	99	←	←	←	←	77
62	55	←	←	←	←	←	←	55	←	←	←	←	←
63	77	←	←	←	←	←	←	7B	←	←	←	←	←
64	77	←	←	←	←	←	←	78	←	←	←	←	←
65	76	←	←	←	←	←	←	92	←	←	←	←	←
66	76	←	←	←	←	←	←	91	←	←	←	←	←
68	20	←	←	←	←	←	←	20	←	←	←	←	←
69	20	←	←	←	←	←	←	20	←	←	←	←	←
6A	96	←	←	←	←	←	←	96	←	←	←	←	←
6B	96	←	←	←	←	←	←	3C	←	←	←	←	←
6C	6E	←	←	←	←	←	←	6E	←	←	←	←	←
6D	6E	←	←	←	←	←	←	1B	←	←	←	←	←
6E	8D	←	←	←	←	←	←	8A	←	←	←	←	←
6F	8F	←	←	←	←	←	←	80	←	←	←	←	←
70	98	←	←	←	←	←	←	80	←	←	←	←	←
71	80	←	←	←	←	←	←	90	←	←	←	←	←
74	4C	←	←	←	←	←	←	4C	←	←	←	←	←
75	1C	1F	←	1C	←	←	←	21	←	1F	←	←	←
76	42	3A	←	42	←	←	←	46	←	3A	←	←	←
77	36	46	←	36	←	←	←	48	←	46	←	←	←
79	26	←	←	←	←	←	←	26	←	←	←	←	←
7A	BA	←	←	←	←	←	←	B1	←	78	←	←	←
7B	C3	←	←	←	←	←	←	B3	←	C3	←	←	←
7C	B1	←	←	←	←	←	←	81	←	82	←	←	←
7D	20	←	←	←	←	←	←	41	←	20	←	←	←
7E	00	←	←	←	←	←	←	09	←	00	←	←	←
7F	66	←	←	←	←	←	←	66	←	←	←	←	←

Fig 6-1-7 (a)

← : Same data as that of the left column

Address	Data												
	TRV32	TRV34	TRV44	TRV52	TRV53	TRV312	TRV512	TRV14E		TRV24E			TRV44E
	—	—	—	—	—	—	—	AEP	EXCEPT AEP	AEP	UK	E/AUS/ HK	—
80	01	←	←	←	←	←	←	05	←	03	←	←	←
81	6B	←	←	←	←	←	←	66	←	6B	←	←	←
82	9F	←	←	←	←	←	←	9F	←	←	←	←	←
83	62	66	←	62	←	←	←	66	←	←	←	←	←
84	6C	←	←	←	←	←	←	66	←	6C	←	←	←
85	57	5C	←	57	←	←	←	59	←	5C	←	←	←
88	64	5D	←	64	←	←	←	5D	←	←	←	←	←
8B	20	←	←	←	←	←	←	20	←	←	←	←	←
8D	3C	←	←	←	←	←	←	3A	←	3C	←	←	←
8F	20	←	←	←	←	←	←	22	←	←	←	←	←
90	1B	←	←	←	←	←	←	1B	←	←	←	←	←
91	D0	F0	←	D0	←	←	←	F0	←	←	←	←	←
92	30	←	←	←	←	←	←	28	←	←	←	←	←
93	20	←	←	←	←	←	←	1A	←	←	←	←	←
96	64	←	←	←	←	←	←	64	←	←	←	←	←
A2	8A	DA	←	8A	←	←	←	8A	←	←	DA	←	←
F0	D1	←	←	←	←	←	←	CE	←	D2	←	←	←
F1	03	03	←	03	←	←	04	02	←	←	←	04	←
F5	B8	←	←	←	←	←	←	A8	←	B8	←	←	←
F6	5E	←	←	←	←	←	←	5E	←	←	←	←	←

Fig 6-1-7 (b)

←: Same data as that of the left column

6. 28MHz crystal oscillator adjustment (VC-188 board)

Purpose : Adjusts 28MHz crystal controlled oscillation for synchronizing clock.

Adjustment error : Loss of synchronization or loss of color.

Subject	Not required
Measurement Point	IC201 ㊹ pin
Measuring Instrument	Frequency counter
Adjustment Page	F
Adjustment Address	3D
Specification	4433618.75 ± 17Hz (PAL) 3579545 ± 17Hz (NTSC)

Adjustment procedure:

Order	Page	Address	Data	Procedure
1	6	00	01	After setting the data, press the PAUSE button. (Preparation)
2	F	3D		Change the data using PLAY, STOP buttons until the frequency satisfies the specification.
3	F	3D		Press the PAUSE button.
4	6	00	00	After setting the data, press the PAUSE button. (End)

Reference: Conversion between the hexadecimal number and decimal number.

In some adjustment items, data appears in hexadecimal numbers on the DDS display or on the adjustment remote commander. Maintenance engineers are expected to convert the displayed hexadecimal numbers to the corresponding decimal numbers using the following conversion table.

Make a required calculation described in each adjustment item. Then re-convert the result of calculation back from the decimal numbers to the corresponding hexadecimal numbers using the following conversion table.

Hexadecimal-decimal Conversion Table

Upper digit of hexadecimal \ Lower digit of hexadecimal	0	1	2	3	4	5	6	7	8	9	A (A)	B (b)	C (c)	D (d)	E (E)	F (F)
0	0	1	2	3	4	5	6	7	8	9	10	11	12	13	14	15
1	16	17	18	19	20	21	22	23	24	25	26	27	28	29	30	31
2	32	33	34	35	36	37	38	39	40	41	42	43	44	45	46	47
3	48	49	50	51	52	53	54	55	56	57	58	59	60	61	62	63
4	64	65	66	67	68	69	70	71	72	73	74	77	76	77	78	79
5	80	81	82	83	84	85	86	87	88	89	90	91	92	93	94	95
6	96	97	98	99	100	101	102	103	104	105	106	107	108	109	110	111
7	112	113	114	115	116	117	118	119	120	121	122	123	124	125	126	127
8	128	129	130	131	132	133	134	135	136	137	138	139	140	141	142	143
9	144	145	146	147	148	149	150	151	152	153	154	155	156	157	158	159
A (A)	160	161	162	163	164	165	166	167	168	169	170	171	172	173	174	175
① B (b)	176	177	178	179	180	181	182	183	184	185	186	187	188	189	190	191
C (c)	192	193	194	195	196	197	198	199	200	201	202	203	204	205	206	207
D (d)	208	209	210	211	212	213	214	215	216	217	218	219	220	221	222	223
E (E)	224	225	226	227	228	229	230	231	232	233	234	235	236	237	238	239
F (F)	240	241	242	243	244	245	246	247	248	249	250	251	252	253	254	255

② (D (d) column)

Note : The characters shown in the parenthesis ( ) shown the display on the adjustment remote commander.
(Example) If the DDS display or the adjustment remote commander shows BD (bd);
Because the upper digit of the adjustment number is B (b), and the lower digit is D (d), the meeting point "189" of ① and ② in the above table is the corresponding decimal number.

〈**How to convert the decimal number to hexadecimal number**〉
The decimal numbers are divided into following three categories. Calculation method is different in three categories respectively.

(1) 0 ~ 255 → 00h ~ FFh
(2) 256 ~ 4095 → 0100h ~ 0FFFh
(3) 4096 ~ 65536 → 1000h ~ FFFFh

If the decimal number fall into the category (1);

1) Divide the decimal number by 16. Result is "A".
2) Take the integer portion of the number "A" as "B".
3) Calculate the equation (A–B) ×16. Result is "C".
4) "B" is the second digit number of the hexadecimal number and "C" is the first digit number of the hexadecimal number. (BC)h

(Example)
If the decimal number is "189";

1) 189 ÷ 16 = 11.8125 ····· (A)
2) (B)
3) (11.8125–11) ×16 =13 ····· (C)
4) 189 → (BD)h is obtained.

If the decimal number fall into the category (2);

1) Divide the decimal number by 256. Result is "A".
2) Take the integer portion of the number "A" as "B".
3) Calculate the equation (A-B) × 256. Result is "C".
4) Take the integer portion of the number "C" as "D".
5) Calculate the equation (C-D) ×16. Result is "E".
6) "B" is the third digit number, "D" is the second digit number and "E" is the first digit number of the hexadecimal number. (BDE)h

(Example)
If the decimal number is "2100";

1) 2100 ÷ 256 = 8.203125 ····· (A)
2) (B)
3) (8.203125 – 8) × 256 ÷16 = 3.25 ····· (C)
4) (D)
5) (3.25–3) ×16 = 4 ····· (E)
6) 2100 → (834)h is obtained.

If the decimal number fall into the category (3);

1) Divide the decimal number by 4096. Result is "A".
2) Take the integer portion of the number "A" as "B".
3) Calculate the equation (A–B) × 4096 ÷ 256. Result is "C".
4) Take the integer portion of the number "C" as "D".
5) Calculate the equation (C–D) ×256÷16. Result is "E".
6) Take the integer portion of the number "E" as "F".
7) Calculate the equation (E–F) ×16. Result is "G". (Round the number "G" to count fractions of 0.5 and over as a unit and cut away the rest.)
8) "B" is the fourth digit number, "D" third digit number, "F" is the second digit number and "G" is the first digit number of the hexadecimal number. (BDFG)h

(Example)
If the decimal number is "31814";

1) 31814 ÷ 4096 = 7.7670898 ····· (A)
2) (B)
3) (7.7670898 – 7) × 4096 ÷ 256 = 12.273436 ····· (C)
4) (D)
5) (12.273436 – 12) × 256 ÷ 16 = 4.374976 ····· (E)
6) (F)
7) (4.374976–4) × 16 = 5.999616
(Round the number to count fractions of 0.5 and over as a unit and cut away the rest.)
8) 6 ·····
9) 31814 → (7C46)h is obtained.

〈How to convert the hexadecimal number to decimal number〉
If the hexadecimal number is (ABCD)h, the decimal number is calculated by the following equation.
(A×4096) + (B×256) + (C×16) + (D×1) = decimal number

(Example) If the hexadecimal number is "(3BA4)h":
(3×4096) + (11×256) + (10×16) + (4×1)=15268

7. HALL adjustment

Purpose : Variation of the HALL element outputs is removed by adjusting amplifier gain and offset. The HALL elements detect the lens iris position.

Adjustment error : Oscillation of lens iris, or incorrect white balance indoor and outdoor.

Subject	Not required
Measurement Point	DDS display on the EVF or monitor
Measuring Instrument	TV
Adjustment Page	F
Adjustment Address	40 41
Specification	13h to 17h when iris is opened. 79h to 7Dh when iris is closed.

Adjustment procedure:

Order	Page	Address	Data	Procedure
1	6	00	01	After setting the data, press the PAUSE button. (Preparation)
2	F	02	21	After setting the data, press the PAUSE button.
3				Turn off the UNREG power supply once, then turn it on.
4	6	00	01	After setting the data, press the PAUSE button.
5	6	02	03	After setting the data, press the PAUSE button.
6	6	01	03	After setting the data, press the PAUSE button.
7	F	40	40	After setting the data, press the PAUSE button. Read the data appearing on the DDS display note. The read-out data is W_2.
8	F	40	30	After setting the data, press the PAUSE button. Read the data appearing on the DDS display note. The read-out data is W_1.
9	6	01	01	After setting the data, press the PAUSE button.
10	F	40	30	After setting the data, press the PAUSE button. Read the data appearing on the DDS display note. The read-out data is K_1.
11	F	40	40	After setting the data, press the PAUSE button. Read the data appearing on the DDS display note. The read-out data is K_2.
12				Convert the data W_1, W_2, K_1 and K_2 into the decimal numbers. The result decimal numbers are W_1', W_2', K_1' and K_2'. (Use page 6-13 ⟨How to convert the hexadecimal number to decimal number⟩ or “Hexadecimal-Decimal Conversion Table”.) Calculate the following equation (decimal number calculation) to obtain X_1'.
13				$A' = W_2' + K_1' - W_1' - K_2'$ ..... equation 1 $B' = W_1' - K_1'$ ..... equation 2 $X_1' = \frac{1600 + (48 \times A') - (16 \times B')}{A'}$ ..... equation 3
14				Convert the decimal number X_1' to the hexadecimal number to obtain X_1. (Round the number X_1 to count fractions of 0.5 and over as a unit and cut away the rest.)
15	F	40		Set the data X_1 (obtained at step 14).
16				Press the PAUSE button.
17	F	41		Change the data using the PLAY and STOP until 15h appears on the DDS display.
18				Press the PAUSE button.
19	6	01	03	After setting the data, press the PAUSE button.
20				If the DDS display shows the data in the range from 79h to 7Dh, it indicates the end of adjustment, and proceed to the item “Processing after Adjustments”. If it is not, use the DDS display data as W_0 and proceed to step 21 and followings.

Note : Lower two digits of the data which is displayed at the right bottom of he EVF or TV monitor

Order	Page	Address	Data	Procedure
21				Convert the value W_0 to a decimal value to obtain the value W_0'.
22				Calculate the value X_2' from the following equation (decimal calculation). C' = W_0'+K_1'–W_1'–20 ..... equation 4 $X_2' = \frac{(100 - B') \times (X_1' - 48) + (48 \times C')}{C'}$ ..... equation 5 (The values X_1' and B' are obtained from the equations 2 and 3 in step 13.)
23				Convert the value X_2' to a hexadecimal number to obtain X_2. (Round the number X_2 to count fractions of 0.5 and over as a unit and cut away the rest.)
24	F	40		Set the data X_2 (which is the result of calculation in step 23).
25				Press the PAUSE button.
26	F	41		Change data using PLAY and STOP button until 7Bh appears on the DDS display.
27				Press the PAUSE button.
28	6	01	01	After setting the data, press the PAUSE button.
29				Confirm that the DDS display shows the data in the range from 13 to 17.

Processing after Adjustments:

Order	Page	Address	Data	Procedure
1	6	02	00	After setting the data, press the PAUSE button.
2	6	01	00	After setting the data, press the PAUSE button.
3	F	02	00	After setting the data, press the PAUSE button.
4				Turn off the UNREG power supply once, then turn it on.
5	6	00	00	After setting the data, press the PAUSE button. (End)

Related adjustments:
“IRIS IN/OUT adjustment”

8. Flange back adjustment

Purpose : Automatic flange back adjustment of inner focus lens.

Adjustment error : Loss of focus when switched between auto focus and manual focus.

Subject	Chart for flange back adjustment (Placed 2000 ± 5 mm in front of the lens with illumination of 300 ± 50 lux.)
Measurement Point	Confirm the focus on monitor TV.
Measuring Instrument	
Adjustment Page	F
Adjustment Address	52, 53 54, 55 56, 57 58, 59

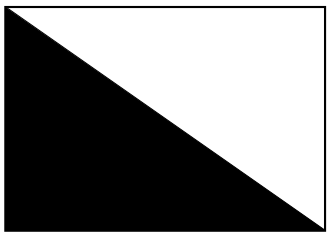

(Chart for flange back adjustment)
(See page 6-2)

Note 1 : Confirm that the “Camera-shaking” correction to OFF. (EXCEPT TRV14E MODEL)

Note 2 : Confirm that the “Digital Zoom” is turned OFF. (EXCEPT TRV14E MODEL)

Adjustment procedure:

Order	Page	Address	Data	Procedure
1				Check that the center of the flange back adjustment chart coincides with that of the display on the monitor at both ends: TELE end and the WIDE end of the zoom lens.
2	6	00	01	After setting the data, press the PAUSE button. (Preparation)
3				Confirm that the data at page F, address 52 to 59 is the initial value, referring to the “Page F address list”.
4	6	11		Confirm that the data is 00.
5	6	42	02	After setting the data, press the PAUSE button.
6	6	43	01	After setting the data, press the PAUSE button.
7	6	01	13	After setting the data, press the PAUSE button.
8	6	01	15	After setting the data, press the PAUSE button. The adjustment data is automatically input to page: F, addresses : 52 to 59.
9	6	11		Confirm that the data is 01.
10	6	42	00	After setting the data, press the PAUSE button.
11	6	43	00	After setting the data, press the PAUSE button.
12	6	01	00	After setting the data, press the PAUSE button.

Processing after Adjustments:

Order	Procedure
1	Turn the main power supply (7.2 V) OFF, then ON. (If this step is not performed, the camera will be out of focus.)

9. Flange back check

Subject	Siemens star (Placed 2000 ± 5 mm in front of the lens with illumination of about 200 lux.)
Measurement Point	Confirm focus on monitor TV
Measuring Instrument	
Specification Value	Picture must have good focus at both TELE and WIDE ends.

Note 1 : Confirm that the "Camera-shaking" correction to OFF. (EXCEPT TRV14E MODEL)

Note 2 : Confirm that the "Digital Zoom" is turned OFF. (EXCEPT TRV14E MODEL)

Note 3 : It is judged from the page A display on the adjustment remote commander if the picture has good focus while the auto focus is ON.

1) Set data: 0B to the page:6, address: 02.
2) Focus condition can be known from the page A display.

A: 00 : XX

See the right table.

(Bit 2 value 0 : Picture is out of focus.
1 : Picture is in focus.)

Display on the adjustment remote commander	Bit values bit2
0	0
1	0
2	0
3	0
4	1
5	1
6	1
7	1
8	0
9	0
A(R)	0
B(b)	0
C(C)	1
D(d)	1
E(E)	1
F(F)	1

In focus

Adjustment procedure:

Order	Page	Address	Data	Procedure
1				Place a Siemens star at 2 meters in front of lens.
2				Decrease illumination to the chart down to a point before noise appears on monitor TV, in order to fully open the IRIS.
3	6	42	02	After setting the data, press the PAUSE button.
4	6	43	01	After setting the data, press the PAUSE button.
5				Shoot the Siemens star at TELE end.
6				Confirm that the image is in focus. (Note 3).
7	6	21	10	After setting the data, press the PAUSE button.
8				Shoot the Siemens star at WIDE end.
9				Confirm that the image is in focus.

Processing after Adjustments:

Order	Page	Address	Data	Procedure
1	6	02	00	After setting the data, press the PAUSE button.
2	6	21	00	After setting the data, press the PAUSE button. (END)
3	6	42	00	After setting the data, press the PAUSE button.
4	6	43	00	After setting the data, press the PAUSE button.

10. Picture frame setting

Subject	Color bar chart standard picture frame
Measurement Point	VIDEO output terminal (Terminated in 75Ω)
Measuring Instrument	Oscilloscope and monitor TV
Specification Value	A=B, C=D, t=0 ± 0.1msec

Note 1 : Confirm that the “Camera-shaking” correction to OFF. (EXCEPT TRV14E MODEL)
Note 2 : Confirm that the “Digital Zoom” is turned OFF. (EXCEPT TRV14E MODEL)

Setting procedure:

Order	Procedure
1	Turn OFF the auto focus.
2	Adjust the focus using the focus knob.
3	Adjust direction and zoom of camera so that the picture frame is adjusted as specified by Fig. 6-1-8 and Fig. 6-1-9.
4	Write down markings on the picture frame on the monitor screen. If the “color bar chart standard picture frame” or “white pattern standard picture frame” is specified in the following adjustment items, obtain this picture frame.

Confirm with an oscilloscope

1. Horizontal rate

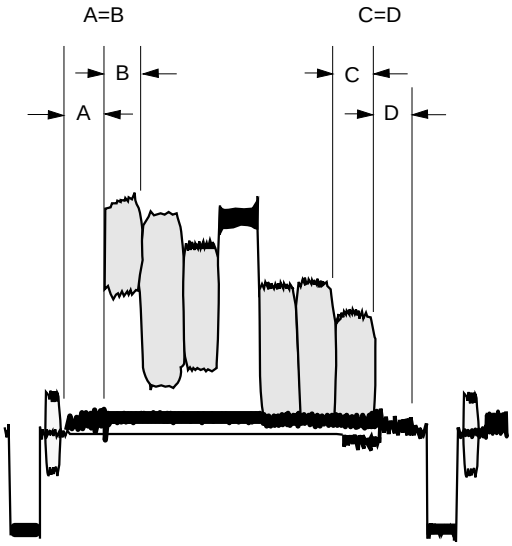

2. Vertical rate

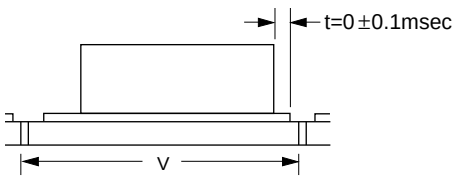

Fig. 6-1-8

Confirm on TV monitor (underscanned display)

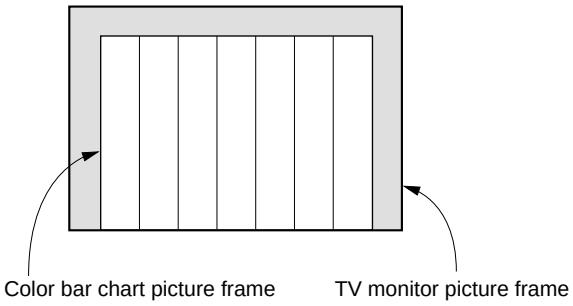

Fig. 6-1-9

11. Color reproduction adjustment

Purpose : Adjust the three primary color matrix coefficients for correct color reproduction.

Adjustment error : Poor color reproduction.

Subject	Color bar chart standard picture frame
Measurement Point	VIDEO output terminal (Terminated in 75Ω)
Measuring Instrument	Vectorscope
Adjustment Page	F
Adjustment Address	43, 44, 45, 46
Specification Value	Each spot must be located within the specified color reproduction zone on a vectorscope display.

Note 1 : Confirm that the “Camera-shaking” correction to OFF. (EXCEPT TRV14E MODEL)

Note 2 : Confirm that the “Digital Zoom” is turned OFF. (EXCEPT TRV14E MODEL)

Adjustment procedure:

Order	Page	Address	Data	Procedure	Condition
1	6	00	01	After setting the data, press the PAUSE button. (Preparation)	
2	6	42	02	After setting the data, press the PAUSE button.	
3	6	03	00	After setting the data, press the PAUSE button. (Setting)	
4	F	80		Take note of the data.	
5	F	80	00	After setting the data, press the PAUSE button.	
6	6	01	37	After setting the data, press the PAUSE button.	
7	F	43, 44 45, 46		Change the data so that red, yellow, magenta, green, cyan and blue spot must be located within the specified color reproduction zone on a vectorscope display. Press the PAUSE button for each address.	Weighting OFF mode.

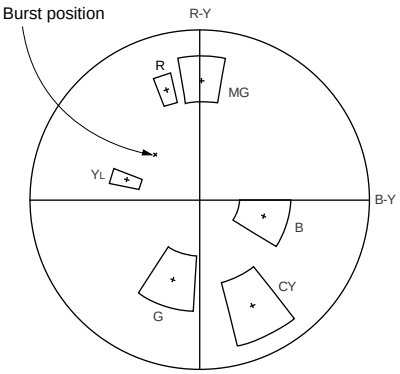

PAL (510H/760H) MODEL

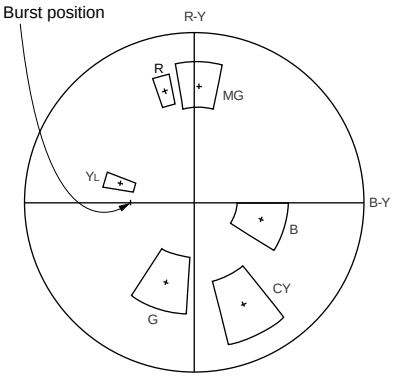

NTSC (510H) MODEL

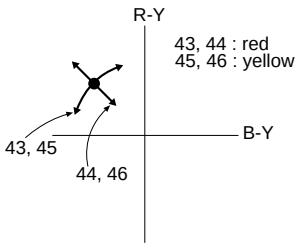

Processing after Adjustments:

Order	Page	Address	Data	Procedure
1	6	42	00	After setting the data, press the PAUSE button.
2	6	01	00	After setting the data, press the PAUSE button.
3	F	80		Set the data which is noted in step 4, then press the PAUSE button.
4	6	03	10	After setting the data, press the PAUSE button. (Setting)
5	6	00	00	After setting the data, press the PAUSE button. (End)

Related Adjustments:

“Auto white balance reference data input”

“Auto white balance adjustment”

12. IRIS IN/OUT adjustment

Purpose : Measure the light level and write into EE PROM for indoor/outdoor identification in auto white balance.

Adjustment error : Incorrect white balance.

Subject	White pattern standard picture frame
Measurement Point	EVF or DDS display of monitor TV
Measuring Instrument	
Adjustment Page	F
Adjustment Address	50 51

Note 1 : Confirm that the “Camera-shaking” correction to OFF. (EXCEPT TRV14E MODEL)

Note 2 : Confirm that the “Digital Zoom” is turned OFF. (EXCEPT TRV14E MODEL)

Adjustment procedure:

Order	Page	Address	Data	Procedure
1	6	00	01	After setting the data, press the PAUSE button. (Preparation)
2	F	02	21	After setting the data, press the PAUSE button.
3				Turn off the UNREG power supply once, then turn it on.
4	6	00	01	After setting the data, press the PAUSE button.
5	6	11		Confirm that the date is 00.
6	6	01	4B	After setting the data, press the PAUSE button.
7	6	01	49	After setting the data, press the PAUSE button.
8	6	11		If data is 01, this is the end of data read. The data of page F, address 50 and 51 are automatically input to this memory.

Processing after Adjustments:

Order	Page	Address	Data	Procedure
1	6	01	00	After setting the data, press the PAUSE button.
2	F	02	00	After setting the data, press the PAUSE button.
3				Turn off the UNREG power supply once, then turn it on.
4	6	00	00	After setting the data, press the PAUSE button. (End)

13. Auto white balance reference data input

Subject	White pattern standard picture frame
Adjustment Page	F
Adjustment Address	49, 4A 4B, 4C

Note 1 : Confirm that the “Camera-shaking” correction to OFF. (EXCEPT TRV14E MODEL)
Note 2 : Confirm that the “Digital Zoom” is turned OFF. (EXCEPT TRV14E MODEL)
Note 3 : The “Color reproduction adjustment” must have been completed before making this adjustment.

Adjustment procedure:

Order	Page	Address	Data	Procedure
1				Turn the main power OFF then to ON.
2				Shoot a white pattern with the standard picture frame.
3	6	00	01	After setting the data, press the PAUSE button.
4	6	11		Confirm that data is 00.
5	6	01	11	After setting the data, press the PAUSE button.
6	6	01	0D	After setting the data, press the PAUSE button. (Executes the auto white balance reference data input.)
7	6	11		If data is 01, this is the end of data read. The data of page F, address 49 to 4C are automatically input to this memory.

Processing after Adjustments:

Order	Page	Address	Data	Procedure
1	6	01	00	After setting the data, press the PAUSE button.
2				Execute “Auto white balance adjustment”.
3	6	00	00	After setting the data, press the PAUSE button. (End)

Related Adjustments:
Auto white balance adjustment

14. MAX gain adjustment

Purpose : Sets the minimum illumination level.
Adjustment error : Normal video level cannot be obtained at low illumination (dark).

Subject	White pattern standard picture frame
Measurement Point	Data of the page A of the adjustment remote commander
Measuring Instrument	Oscilloscope
Adjustment Page	F
Adjustment Address	42
Specification Value	Confirm that the data of page A of the adjustment remote commander is B0h or more.

Note 1 : Confirm that the “Camera-shaking” correction to OFF. (EXCEPT TRV14E MODEL)
Note 2 : Confirm that the “Digital Zoom” is turned OFF. (EXCEPT TRV14E MODEL)

Adjustment procedure:

Order	Page	Address	Data	Procedure
1	6	00	01	After setting the data, press the PAUSE button. (Preparation)
2	6	02	01	After setting the data, press the PAUSE button.
3	6	42	02	Steady shot model only. After setting the data, press the PAUSE button.
4	6	04	58	After setting the data, press the PAUSE button.
5	6	01	19	After setting the data, press the PAUSE button.
6	F	42	08	After setting the data, press the PAUSE button.
7				Confirm that the data of page A of the adjustment remote commander is B0h or more.

Processing after Adjustments:

Order	Page	Address	Data	Procedure
1	6	01	00	After setting the data, press the PAUSE button.
2	6	02	00	After setting the data, press the PAUSE button.
3	6	04	00	After setting the data, press the PAUSE button.
4	6	42	00	Steady shot model only. After setting the data, press the PAUSE button.
5	6	00	00	After setting the data, press the PAUSE button. (End)

15. Auto white balance adjustment

Purpose : Adjust for correct auto white balance.
Adjustment error : Poor color reproduction.

Subject	White pattern standard picture frame
Filter	Color temperature correction filter C14
Measurement Point	EVF or DDS display on monitor TV
Measuring Instrument	
Adjustment Page	F
Adjustment Address	4E, 4F
Specification Value	R ratio = 2XX0h ± 40h XX = Data at address : F5 on page F (For example, when the data XX is B8, the R ratio is 2B80h ± 40h) B ratio = YY80h ± 80h YY = Data at address : F6 on page F (For example, when the data YY is 5Eh, the B ratio is 5E80h ± 80h)

Note 1 : Make this adjustment after "Auto white balance reference data input" is completed.
Note 2 : Confirm that the "Camera-shaking" correction to OFF. (EXCEPT TRV14E MODEL)
Note 3 : Confirm that the "Digital Zoom" is turned OFF. (EXCEPT TRV14E MODEL)

Adjustment procedure:

Order	Page	Address	Data	Procedure
1				Put on the color temperature correction filter C14 on the lens.
2	F	F5		Read the data of this address. The read-out data should be used as the specification value calculation data XX.
3	F	F6		Read the data of this address. The read-out data should be used as the specification value calculation data YY.
4	6	00	01	After setting the data, press the PAUSE button. (Preparation 1)
5	F	02	21	After setting the data, press the PAUSE button. (Preparation 2)
6				Turn off the UNREG power supply once, then turn it on.
7	6	00	01	After setting the data, press the PAUSE button.
8	6	01	35	After setting the data, press the PAUSE button.
9	6	02	04	After setting the data, press the PAUSE button. Sets the R ratio display mode.
10	F	4E		Change data using the PLAY and STOP buttons until the R ratio data on the DDS display becomes the specification value. R ratio data = 2000h + 10h × D_{F5} (D_{F5} = Page F, Address : F5 data)
11	6	02	05	After setting the data, press the PAUSE button. Sets the B ratio display mode.
12	F	4F		Change data using the PLAY and STOP buttons until the B ratio data on the DDS display becomes the specification value. B ratio data = 80h + 100h × D_{F6} (D_{F6} = Page F, Address: F6 data)
13				Press the PAUSE button.

Processing after Adjustments:

Order	Page	Address	Data	Procedure
1	6	01	00	After setting the data, press the PAUSE button.
2	6	02	00	Releases the B ratio display mode.
3	F	02	00	After setting the data, press the PAUSE button. (End 2)
4				Turn off the UNREG power supply once, then turn it on.
5	6	00	00	After setting the data, press the PAUSE button. (End 1)

16. White balance check

Subject	White pattern standard picture frame
Filter	Color temperature correction filter C14 ND filter 1.0 and 0.3
Measurement Point	VIDEO output terminal (Terminated in 75Ω)
Measuring Instrument	Vectorscope
Specification Value	Fig. 6-1-10. A ~ C

Note 1 : Confirm that the “Camera-shaking” correction to OFF.
(EXCEPT TRV14E MODEL)
Note 2 : Confirm that the “Digital Zoom” is turned OFF.
(EXCEPT TRV14E MODEL)

Check procedure:

Order	Page	Address	Data	Procedure	Condition
1				Check that the lens is not covered by either filter.	
2	6	01	0F	After setting the data, press the PAUSE button.	
3				Check that the white luminance point is located within the circle shown in Fig. 6-1-10 (a).	Without filter.
4	6	01	00	After setting the data, press the PAUSE button.	
5	6	01	23	After setting the data, press the PAUSE button.	
6				Put the C14 filter on the lens.	
7				Check that the white luminance point is located within the circle shown in Fig. 6-1-10 (b).	C14 filter
8				Remove the C14 filter and put ND filter 1.3 (1.0+0.3) on the lens.	
9				Check that the white luminance point is located within the circle shown in Fig. 6-1-10 (c).	ND Filter 1.3

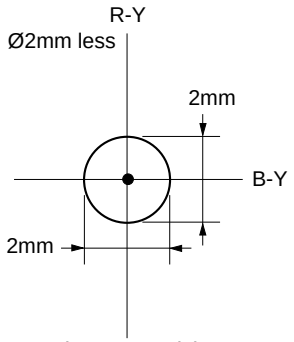

Fig. 6-1-10 (a)

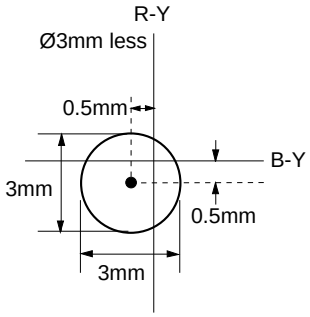

Fig. 6-1-10 (b)

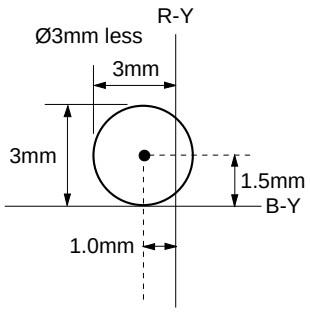

Fig. 6-1-10 (c)

Processing after Adjustments:

Order	Page	Address	Data	Procedure
1	6	01	00	After setting the data, press the PAUSE button.
2	6	00	00	After setting the data, press the PAUSE button. (End)

17. Velocity sensor sensitivity adjustment (EXCEPT TRV14E)

The "Velocity Sensor Sensitivity Adjustment" is necessary only when the gyro sensor is replaced. If microprocessors or circuit board is not replaced, this adjustment is not necessary. Make operation check only.

Subject	
Measurement point	VIDEO output terminal
Measuring equipment	Oscilloscope or TV monitor
Adjustment page	F
Adjustment address	5A, 5B
Specified value	Shoot an arbitrary object at TELE end, and confirm that the STEADYSHOT function works correctly.

Note 1 : Caution when replacing parts
The two types of parts : ENC05GA and ENC05GB are supplied. Use the same type of sensor as that of the defective sensor. If different type of either ENC05GA or ENC05GB is used, picture can vibrate vertically or horizontally during camera-shake correction. After replacement, make adjustment as described.

Note 2 : Caution on angular speed sensor
The angular speed sensor has high precision vibrator inside. If the sensor is dropped, balance of the vibrator is lost resulting in faulty operation. Handle the sensor carefully.

Note 3 : The sensor sensitivity is indicated on the surface of the

Adjustment procedure:

Order	Page	Address	Data	Procedure
1	6	00	01	After setting the data, press the PAUSE button. (Preparation)
2				Adjust SE651 (vertical direction correction) first : Read the sensor sensitivity value which is indicated on the replacement gyro sensor (SE651). Calculate the following equation (decimal calculation) to obtain the D_1'. (Note 3) $D_1' = \frac{95}{\text{SE651 sensor sensitivity value}}$: NTSC $D_1' = \frac{114}{\text{SE651 sensor sensitivity value}}$: PAL
3	F	5A		Round the number D_1' to count fractions of 0.5 and over as a unit and cut away the rest. Then convert the D_1' into the hexadecimal number. (Use page 6-12 ⟨How to convert the hexadecimal number to decimal number⟩ or "Hexadecimal-Decimal Conversion Table".) The result hexadecimal number is D_1. Set the data D_1 to page : F, address : 5A, and press the PAUSE button.
4				Adjust then SE650 (horizontal direction correction) : Read the sensor sensitivity value which is indicated on the replacement gyro sensor (SE650). Calculate the following equation (decimal calculation) to obtain the D_2'. (Note 3) $D_2' = \frac{95}{1.04} \times \frac{1}{\text{SE650 sensor sensitivity value}}$: NTSC $D_2' = \frac{11}{1.23} \times \frac{1}{\text{SE650 sensor sensitivity value}}$: PAL
5	F	5B		Round the number D_2' to count fractions of 0.5 and over as a unit and cut away the rest. Then convert the D_2' into the hexadecimal number. (Use page 6-12 ⟨How to convert the hexadecimal number to decimal number⟩ or "Hexadecimal-Decimal Conversion Table".) The result hexadecimal number is D_2. Set the data D_2 to page : F, address : 5B, and press the PAUSE button.
6				Shoot an arbitrary object at TELE end, and confirm that the steady shot function works correctly.
7	6	00	00	After setting the data, press the PAUSE button. (End)

18. Electronic viewfinder system adjustments (VF-102 board)

Note : About 2200V dc is applied to CRT anode and about 200 Vdc to the grid. Be careful not to touch them. If hand touches them, there is danger of electric shock

Preparation :

1. Disconnect a flexible board from CN901 on VF-102 board.
2. Connect equipments as follows.

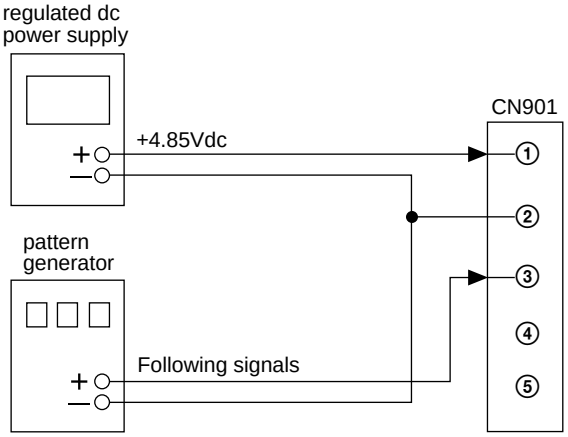

Required signals

1. Monoscope signal
   - Output amplitude: 1.0 Vp-p (75Ω terminated)
   - Horizontal resolution: 600 TV lines or more
   - Vertical resolution: 350 TV lines or more
2. Dot pattern signal
   - Output amplitude 1.0 Vp-p (75Ω terminated)
3. Contrast signal
   - Output amplitude 0.5 Vp-p (75Ω terminated)
   - fH : 15.750kHz (NTSC) / 15.625kHz (PAL)
   - fV : 60Hz (NTSC) / 50Hz (PAL)

Others: Complies with NTSC and PAL. (Refer to Fig. 6-1-12.)

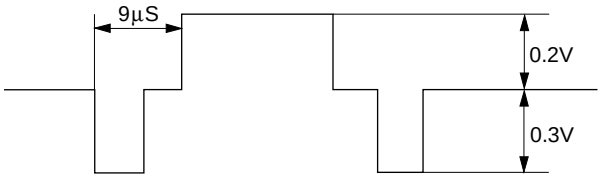

Fig. 6-1-11

VF-102 BOARD (SIDE A)

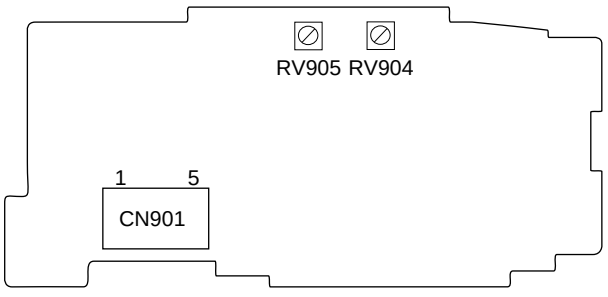

Fig 6-1-12

18-1. Power supply voltage check

Measuring Instrument	Digital voltmeter
EVF5V	
Measurement Point	CN901 Pin ①
Specification Value	4.65 + 0.1Vdc

18-2. Horizontal and vertical position

Purpose : Maintains horizontal position.
Adjustment error : Horizontal position cannot be maintained.

Signal	Monoscope signal
Adjustment	RV905
Specification Value	Overscan 3.5 ± 3.5% (horizontal) (one side) Overscan 4.5 ± 5% (vertical) (one side)

Adjustment procedure:

Order	Procedure
1	Confirm that the horizontal and vertical picture sizes satisfy the specification values.

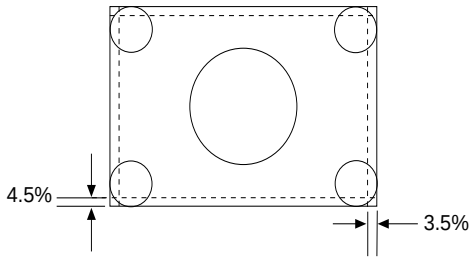

18-3. BRIGHT adjustment

Signal	Monoscope signal
Measurement Point	CRT screen
Adjustment	RV904
Specification Value	Each step of gray scale signal is displayed clearly.

Adjustment procedure:

Order	Procedure
1	Adjust RV904 until each step of gray scale signal is clearly display. (For the brighter region, do not increase brightness to such an extent that the cross-hatch at the center of monoscope signal becomes flared. For the dark region, do not decrease brightness to such an extent that the first step (the darkest step) and the third step cannot be identified.)

18-4. Centering adjustment

Signal	Monoscope signal
Adjustment	DY centering
Specification Value	± 4%

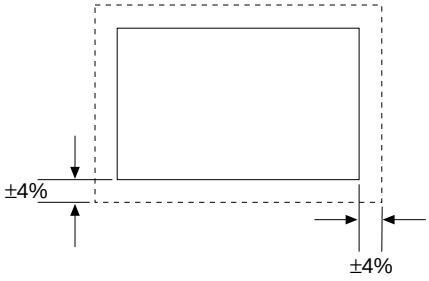

Adjustment procedure:

Order	Data Procedure
1	Adjust DY centering adjustment ring so that margins at top, bottom, right and left are equal.

Note : The centering position is affected by earth magnetism. Rotate the camera 360 degrees and find the amount of centering change. Make the adjustment to the center of the change.

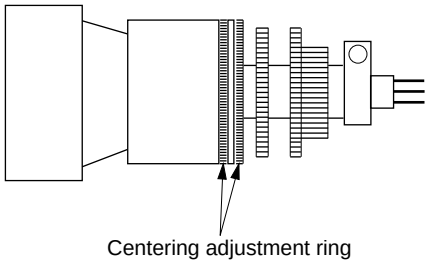

18-5. Focus adjustment

Signal	Monoscope signal
Adjustment	DY focus ring
Specification Value	Horizontal resolution is 300 lines or more.

Adjustment procedure:

Order	Procedure
1	Adjust focus ring for optimum focus. Confirm that the horizontal resolution satisfies the specification.

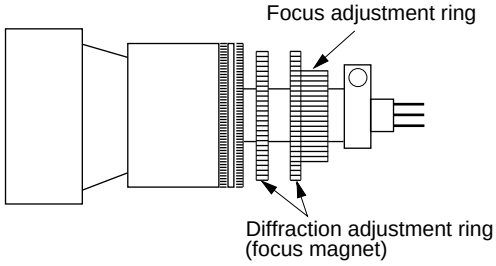

18-6. Diffraction adjustment

Signal	Dot pattern, Monoscope signal
Adjustment	DY diffraction adjustment ring
Specification Value	Refer to the illustration below.

Adjustment procedure:

Order	Procedure
1	Adjust the diffraction adjustment ring so that tail of a dot must be smaller than 2 times of dot diameter, or the fanshaped diffraction must smaller than the dot diameter.
2	If the focus and centering are affected by this adjustment, input monoscope signal and repeat focus and centering adjustments.

Related Adjustments:
Focus adjustment
Centering adjustment

19. COLOR ELECTRONIC VIEWFINDER SYSTEM ADJUSTMENTS

[Adjustment connector]
The viewfinder adjustment points have gathered to CN702 of the VF-110 board. Connect the measuring equipment to CN702 via the jig (J-6082-192-A). The table below shows the pin numbers and the signal names of CN702.

Pin No.	Signal Name
1	LC COM
2	EVF GND
3	G OUT
4	13.5V
5	N.C.
6	12V
7	R OUT
8	B OUT
9	SLYT
10	PCO

Preparation:
Because this machine does not have VIDEO INPUT connector, playback the alignment tape and use the playback signal for adjustment.
Alignment tape :
WR5-5CSP : PAL
(Parts code : 8-967-995-47)
WR5-5NSP : NTSC
(Parts code : 8-967-995-42)

VF-110 BOARD (SIDE A)

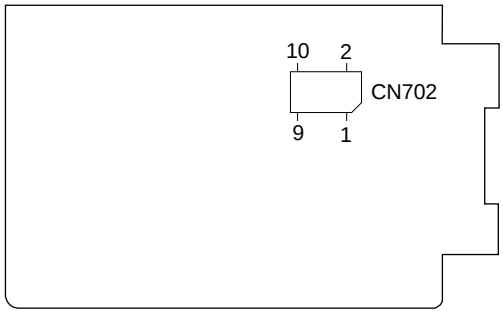

VF-109 BOARD (SIDE A)

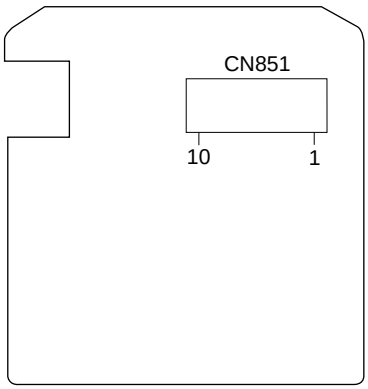

Fig. 6-1-13

19-1. Power supply voltage check (VF-109 board)

Mode	Camera record
Subject	Any subject
Measuring Equipment	Digital voltmeter
EVF 5V check	
Measuring Point	CN851 pin ⑤
Specification Value	4.65 ± 0.05Vdc
EVF15 V check	
Measuring Point	CN851 pin ⑦
Specification Value	15.0 ± 0.05Vdc

19-2. EVR initial data input

Mode	Stop
Signal	Any video signal
Adjustment page	F

Input procedure:

Order	Page	Address	Data	Procedure
1	6	00	01	Set the data.
2	F	CC	A0	After setting the data, press the PAUSE button.
		CD	AE (75)	
		CE	95 (50)	
		CF	7A	
		D0	6A	
		D1	70	
		D2	90	
		D3	40	
		D4	7A	
		D5	7A	
		D6	70	
		D7	05	
3	6	00	00	Set the data.

No mark : NTSC/PAL
( ) : PAL

19-3. PCO adjustment (VF-110 board)

Purpose : To make the TG frequency constant (amplitude).

Adjustment error : VF picture will lose sync when error is large.

Mode	VTR stop
Signal	No signal
Measurement Point	VF-110 board CN702 pin ⑩ (PCO)
Measuring Equipment	Oscilloscope (DC range)
Adjustment Page	F
Adjustment Address	D2
Specification Value	A=1.80 ± 0.05V

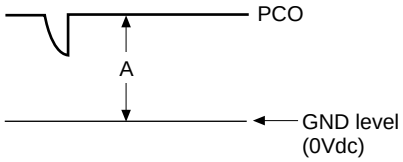

Adjustment procedure:

Order	Page	Address	Data	Procedure
1	6	00	01	Set the data. (Preparation)
2				Check the GND level on an oscilloscope in DC mode.
3	F	D2		Change the data until the PCO voltage (A) becomes the specification value.
4				Press the PAUSE button.
5	6	00	00	Set the data. (End)

19-4. BRIGHT adjustment (VF-110 board)

Purpose : Adjust brightness of EVF screen (appearance)
Adjustment error : The EVF picture will be close to saturated picture (white washing) or black compression.

Mode	Playback
Signal	Signal
Measurement Point	CN702 pin ③ (G OUT) on VF-110 board
Measuring Equipment	Oscilloscope
Adjustment Page	F
Adjustment Address	CC
Specification	A=7.0 ± 0.1Vp-p

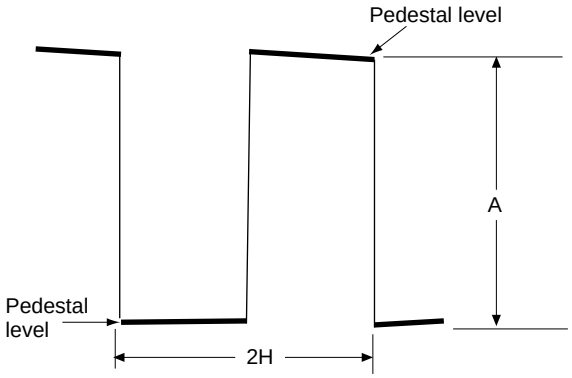

Connection
1) Connect CN702 pin ③ and pin ② (EVF GND) using a 3300Ω resistor (1-249-423-11).

Adjustment Procedure:

Order	Page	Address	Data	Procedure
1	6	00	01	Set the data. (Preparation)
2	F	CC		Change the data until the voltage difference (A) between the inverted waveform's pedestal and the non-inverted waveform's pedestal satisfies the specification.
3				Press the PAUSE button.
4	6	00	00	Set the data. (End)

Related adjustment items
[White Balance Adjustment]

19-5. CONTRAST adjustment (VF-110 board)

Purpose : Adjust contrast of the EVF screen.
Adjustment error : The EVF picture becomes dull (white washing) or close to saturated image.

Mode	Playback
Signal	Signal
Measurement Point	CN702 pin ③ (G OUT) on VF-110 board
Measuring Equipment	Oscilloscope
Adjustment Page	F
Adjustment Address	D1
Specification	A=2.0 ± 0.1Vp-p (NTSC) A=2.0 ± 0.1Vp-p (PAL)

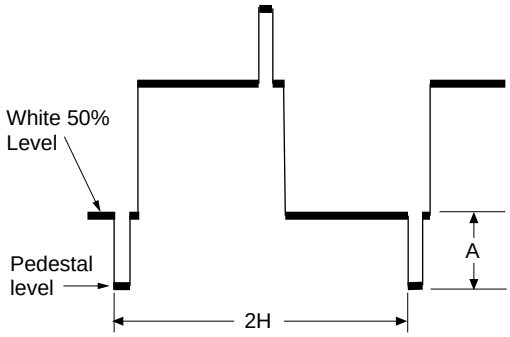

Connection
1) Connect CN702 pin ③ and pin ② (EVF GND) using a 3300Ω resistor (1-249-423-11).

Adjustment Procedure:

Order	Page	Address	Data	Procedure
1	6	00	01	Set the data. (Preparation)
2	F	4B		Change the data until the voltage difference (A) between the 50% all white signal and the pedestal satisfies the specification.
3				Press the PAUSE button.
4	6	00	00	Set the data. (End)

19-6. Back light Current consumption adjustment (VF-109 board)

Purpose : Set brightness of the back light (fluorescent lamp) to a constant level.
Adjustment error : The EVF screen will become too dark or too bright.

Mode	Playback
Signal	No signal
Measurement Point	The pattern land from which R891 is removed
Measuring Equipment	Current meter
Adjustment Page	F
Adjustment Address	D3
Specification	45 ± 2mA

Note 1 : Perform this adjustment after 30 seconds of warm up after the power is turned ON.
Note 2 : Remove R891 before adjustment, and return R891 after adjustment.

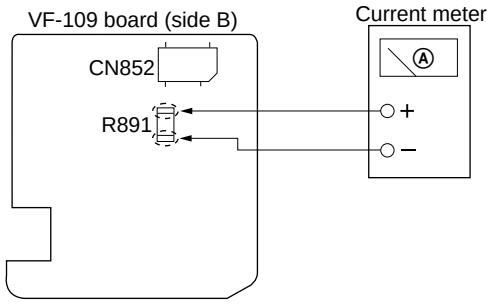

Note : Connect ammeter to thee lands where R891 is removed.
Fig. 6-1-14

Adjustment Procedure:

Order	Page	Address	Data	Procedure
1				Remove R891 from the VF-109 board. Connect an ammeter to the pattern lands from which R891 is removed.
2	6	00	01	Set the data. (Preparation)
3	F	D3		Adjust the current value to the specification.
4				Press the PAUSE button.
5	6	00	00	Set the data. (End)
6				Reconnect R891.

19-7. White balance adjustment

Purpose : Calibrate the white balance.
Adjustment error : The color reproduction of the EVF screen becomes poor.

Mode	Playback
Signal	Any signal
Measurement Point	Check white balance on the EVF screen.
Measuring Equipment	
Adjustment Page	F
Adjustment Address	CF, D0
Specification	The EVF screen must not have any colors.

Adjustment Procedure:

Order	Page	Address	Data	Procedure
1	6	00	01	After setting the data, press the PAUSE button. (Preparation)
2	F	CF	7A	After setting the data, press the PAUSE button.
3	F	D0	6A	After setting the data, press the PAUSE button.
4				Confirm that the EVF screen has not color at all.
5	F	CF, D0		If the EVF screen has any colors, change the data until the EVF screen has any colors.
6				Press the PAUSE button.
7	6	00	00	After setting the data, press the PAUSE button. (End)

20. LCD system adjustments

Note 1 : The backlight (fluorescent lamp) is driven by high voltage AC power supply.
Therefore, be careful not to touch the back light holder with hand or you will receive an electric shock.

Note 2 : When replacing the LCD unit, be careful not to damage the LCD unit with static electricity.

Note 3 :

	LCD size	LCD board
Type 1	2.5 inch (PAL only)	PD-74/SD-24
Type 2		PD-75/SD-25
Type 3	3.0 inch (NTSC)	PD-77
Type 4	3.5 inch (NTSC/PAL)	PD-76

Note 4 : No mark : Type 1, Type 4
〈 〉 : Type 2, Type 3

[Adjustment connector]

Most measurement points of the LCD adjustment are concentrated at the CN804 〈CN1804〉 of the PD-74/76 〈PD-75/77〉 board. Connect the measuring equipment to CN301 via the measuring pin tool. The following table shows the pin numbers and signal names of CN804 〈CN1804〉.

Pin No.	Signal Name	Pin No.	Signal Name
1	VR	2	VG
3	VB	4	HDB 〈HSY〉
5	GND	6	SRT
7	SYNC	8	N.C. 〈COM-O〉
9	N.C.		

1. Multi CPC Parts code:J-6082-311-A
2. Aligment tape
   WR5-4NL (8-967-995-51) : NTSC
   WR5-4CL (8-967-995-56) : PAL

[Video input signal for adjustment]

Playback an alignment tape. Use the color bar signal of the alignment tape playback as the input signal to this machine. Then check that the white (100 %) signal amplitude at CN801 〈CN1801〉 pin ⑨ on the SD-24 〈25〉, PD-76 〈77〉 board is 1.00Vp-p. If the signal column specifies the "Color bar signal with the chroma and burst signals turned OFF", remove the capacitor C814 〈C1813〉 on the SD-24 〈25〉, C814 〈C1804〉 on the PD-76 〈77〉 board. Return C814 〈C1814〉 and IC801 〈IC1801〉 pin ⑤ to the original connections upon completion of adjustment.

[When SD-24 〈25〉 board is used](2.5inch LCD)

- Remove the capacitor C814 〈C1813〉 on the SD-24 〈25〉 board in order to turn OFF the chroma and burst signals of the color bar signal.

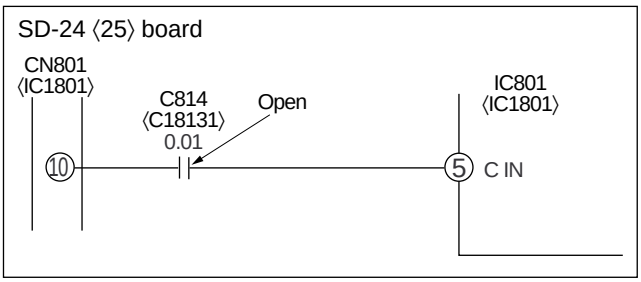

Fig. 6-1-15 (a)

[When PD-76 〈77〉 board is used](3/3.5inch LCD)

- Remove the capacitor C814 〈C1804〉 on the PD-67 〈77〉 board in order to turn OFF the chroma and burst signals of the color bar signal.

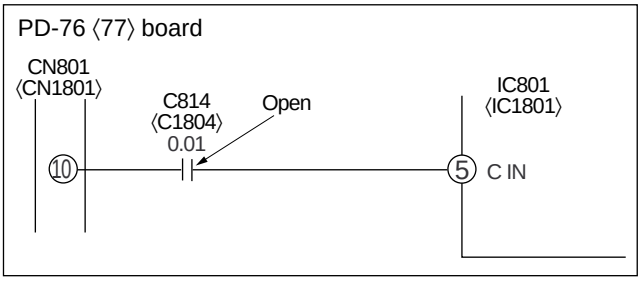

Fig. 6-1-15 (b)

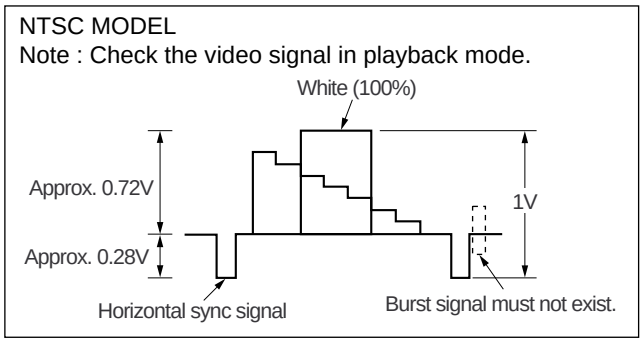

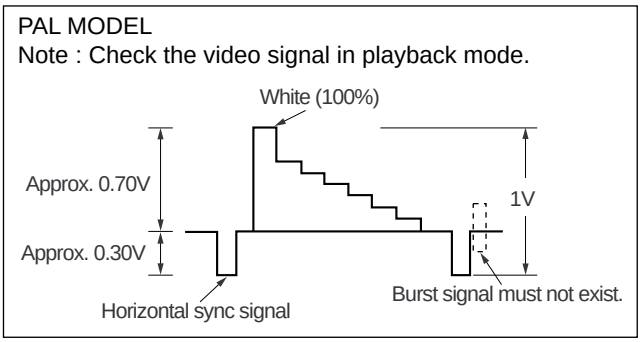

Fig. 6-1-16 Color bar signal with chroma and burst signals switched OFF.

[Power supply voltage adjustment]

Adjust the power supply voltage to be input to the battery terminal so that the voltage across PD-74⟨75⟩76⟨77⟩ board CN802 ⟨CN1802⟩ pins ③ (LCD UNREG) and pins ④ or ⑤ (UNREG GND) is 6.5 ± 0.1Vdc.

Power supply voltage check

Subject	Any subject
Measuring equipment	Digital voltmeter
D 3.1V check	
Measurement point	CN801 ⟨CN1801⟩ Pin ⑦ (SD-24⟨25⟩, PD-76⟨77⟩)
Specification	3.1 ± 0.1Vdc (GND : CN801 ⟨CN1801⟩ Pin ⑧)
PANEL 4.9V check	
Measurement point	CN802 ⟨CN1802⟩ Pin ⑥ (PD-74⟨75⟩76⟨77⟩)
Specification	4.65 ± 0.05Vdc (GND : CN802 ⟨CN1802⟩ Pin ⑦)

	LCD size	LCD board
Type 1	2.5 inch (PAL only)	PD-74/SD-24
Type 2		PD-75/SD-25
Type 3	3.0 inch (NTSC)	PD-77
Type 4	3.5 inch (NTSC/PAL)	PD-76

No mark : Type 1, Type 4
⟨ ⟩ : Type 2, Type 3

20-1. EVR initial data input

Mode	Stop
Signal	Any signal
Adjustment page	F

Note : Do not rewrite the EE PROM data except when it is necessary such as replacement of SD-24⟨25⟩, PD-76⟨77⟩ board IC802 ⟨IC1802⟩.

Modidication procedure:

Order	Page	Address	Data					Procedure
			TYPE1	TYPE2	TYPE3	TYPE4		
			PAL	PAL	NTSC	NTSC	PAL	
1	6	00	01					After setting the data, press the PAUSE button. (Preparation)
2	F	D8	99	5A	80	8C	91	Set each data to each address, and press the PAUSE button.
		D9	60	5F	71	C5	67	
		DA	85	5D	65	6A	7D	
		DB	7F	70	66	77	79	
		DC	75	5F	60	6E	6C	
		DD	A9	95	94	89	8C	
		DE	A8	90	84	9B	79	
		DF	88	30	36	AF	A4	
		A0	(80)	65	64	(80)	(80)	
		A1	(80)	7B	71	(7F)	(7F)	
		A2	(FF)	(FF)	(FF)	(FF)	(FF)	
		A3	(02)	(04)	(05)	(07)	(08)	
3	6	00	00					After setting the data, press the PAUSE button. (End)

Values in parenthis ( ) are fixed values.

20-2. VCO adjustment

Purpose : Sets the VCO free-run frequency.
Adjustment Error : Incorrect picture on EVF

Mode	Stop
Signal	No signal
Measurement point	CN804 pin ④ (HDB) (Type 1, 4) CN1804 pin ④ (HSY) (Type 2, 3)
Measuring equipment	Frequency counter
Adjustment page	F
Adjustment address	DE
Specification	f=15625 ± 30Hz (PAL) (Type 1, 2, 4) f=15734 ± 30Hz (NTSC) (Type 3, 4)

	LCD size	LCD board
Type 1	2.5 inch (PAL only)	PD-74/SD-24
Type 2		PD-75/SD-25
Type 3	3.0 inch (NTSC)	PD-77
Type 4	3.5 inch (NTSC/PAL)	PD-76

No mark : Type 1, Type 4
〈 〉: Type 2, Type 3

Adjustment procedure:

Order	Page	Address	Data	Procedure
1				Remove C183/C1804 (1µF capacitor) (Note)
2				Press the DATA SCREEN button of the remote commander to disappear the display.
3	6	00	01	After setting the data, press the PAUSE button. (Preparation)
4	F	DE		Change data using the PLAY and STOP buttons until the oscillating frequency satisfies the specification.
5				Press the PAUSE button.
6	6	00	00	After setting the data, press the PAUSE button. (End)
7				Connect C183/C1804 (1µF capacitor) (Note)

Note :

TYPE 1, 4 (PD-76/SD-24 board)

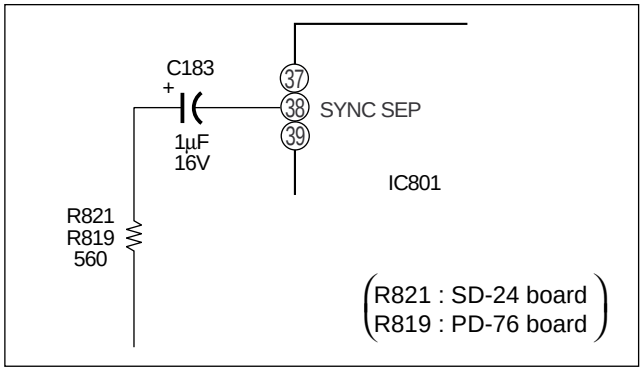

TYPE 2, 3 (PD-77/SD-25 board)

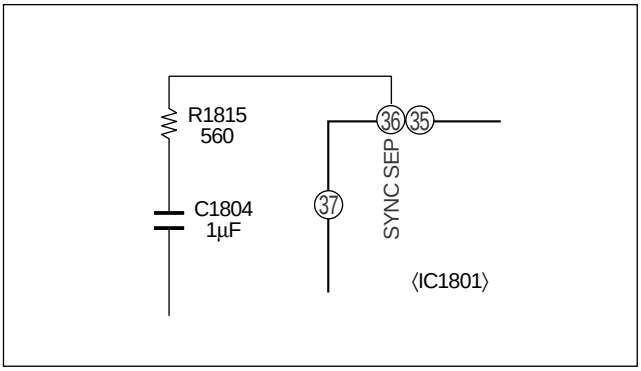

Fig. 6-1-17

20-3. BRIGHT adjustment

Purpose : Adjusts video signal level to drive the LCD panel.

Adjustment Error : Picture on LCD will be white saturated or black compressed.

Mode	Playback
Signal	Color bar signal with the chroma and burst signals turned OFF.
Measurement point	CN804 ⟨CN1804⟩ pin ② (VG)
Measuring equipment	Oscilloscope [External trigger : CN804 ⟨CN1804⟩ pin ⑪ (HDB)]
Adjustment page	F
Adjustment address	D8
Specification	Type 1 : A=1.50 ± 0.05Vp-p Type 2 : A=0.50 ± 0.05Vp-p Type 3 : A=0.47 ± 0.05Vp-p Type 4 : A=2.44 ± 0.05Vp-p

	LCD size	LCD board
Type 1	2.5 inch (PAL only)	PD-74/SD-24
Type 2		PD-75/SD-25
Type 3	3.0 inch (NTSC)	PD-77
Type 4	3.5 inch (NTSC/PAL)	PD-76

No mark : Type 1, Type 4
⟨ ⟩ : Type 2, Type 3

Note 1 : **Adjustment procedure of TYPEs 2 and 3 machines are as follows :**
D.RANGE (item 20-5) →
BRIGHT (item 20-3) →
CONTRAST (item 20-4)

Note 2 : The adjustment points of the TYPEs 2 and 3 machines are as follows :

Note 3 : This adjustment must be performed together with the CONTRAST adjustment as the pair adjustment. (Re-adjust them when they are out of specifications.)

Adjustment procedure:

Order	Page	Address	Data	Procedure
1		6	00	01 After setting the data, press the PAUSE button. (Preparation)
2	F	D8		Change data using the PLAY and STOP buttons until the VG signal amplitude (A) has the specification value.
3				Press the PAUSE button.
4	6	00	00	After setting the data, press the PAUSE button. (End)

Related Adjustment:
CONTRAST adjustment

NTSC MODEL (TYPE 4 only)

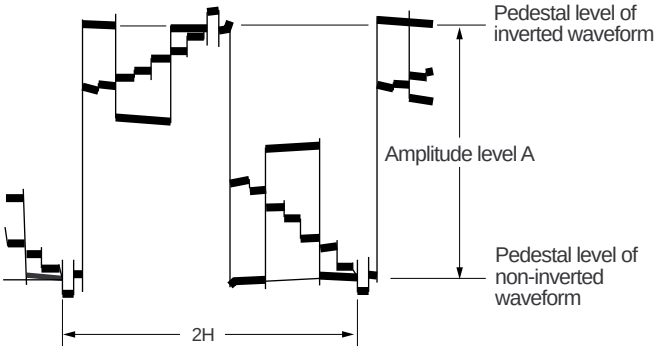

PAL MODEL (TYPE 1, 4)

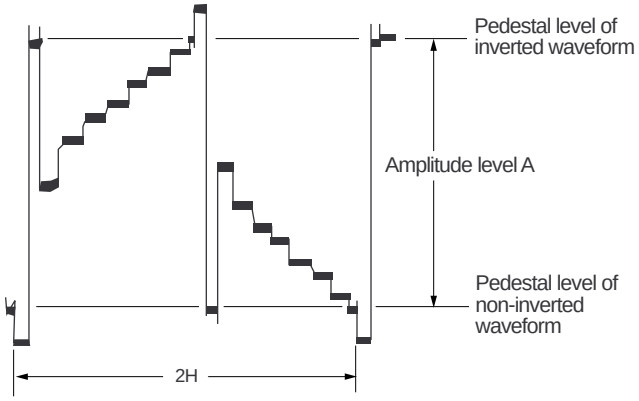

NTSC MODEL (TYPE 3 only)

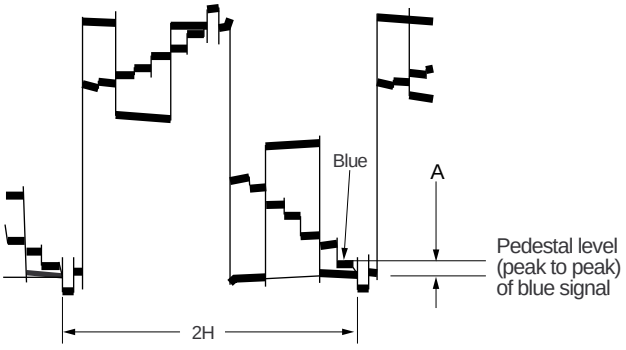

PAL MODEL (TYPE 2 only)

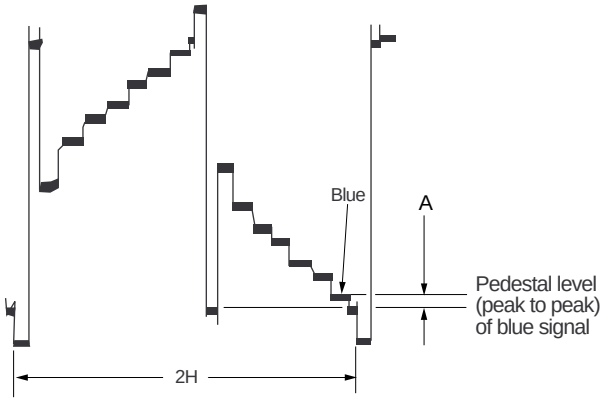

20-4. CONTRAST adjustment

Purpose : Adjusts contrast of LCD picture
Adjustment Error : Details of black will be lost, or white saturated/black compressed picture.

Mode	Playback
Signal	Color bar signal with chroma and burst signals turned OFF.
Measurement point	CN804 〈CN1804〉 pin ② (VG)
Measuring equipment	Oscilloscope [External trigger : CN804 〈CN1804〉 pin ④ (HDB) 〈HSY〉]
Adjustment page	F
Adjustment address	DD
Specification	Type 1 : A=2.00 ± 0.05Vp-p (PAL) Type 2 : A=3.30 ± 0.05Vp-p (PAL) Type 3 : A=3.45 ± 0.05Vp-p (NTSC) Type 4 : A=2.87 ± 0.05Vp-p (NTSC/PAL)

	LCD size	LCD board
Type 1	2.5 inch (PAL only)	PD-74/SD-24
Type 2		PD-75/SD-25
Type 3	3.0 inch (NTSC)	PD-77
Type 4	3.5 inch (NTSC/PAL)	PD-76

No mark : Type 1, Type 4
〈 〉: Type 2, Type 3

Note 1 : Set the BRIGHT control volume to their mechanical center during adjustment.
(Center is the 17 clicks from the BRI MIN.)
Note 2 : This adjustment must be performed together with the BRIGHT adjustment as the pair adjustment.
(Re-adjust them when they are out of specifications.)

Adjustment procedure:

Order	Page	Address	Data	Procedure
1	6	00	01	After setting the data, press the PAUSE button. (Preparation)
2	F	DD		Change data using the PLAY and STOP buttons until the amplitude (A) has the specification value.
3				Press the PAUSE button.
4	6	00	00	After setting the data, press the PAUSE button. (End)

Related Adjustment:
BRIGHT adjustment

NTSC MODEL

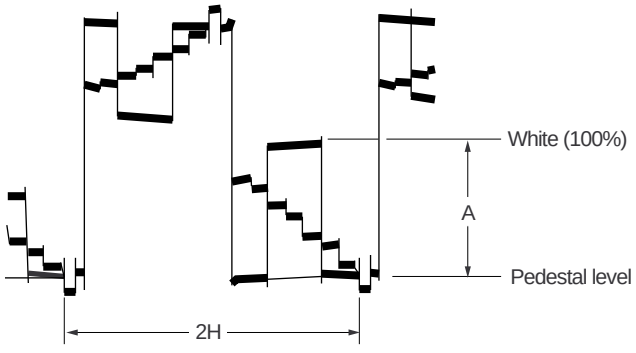

PAL MODEL

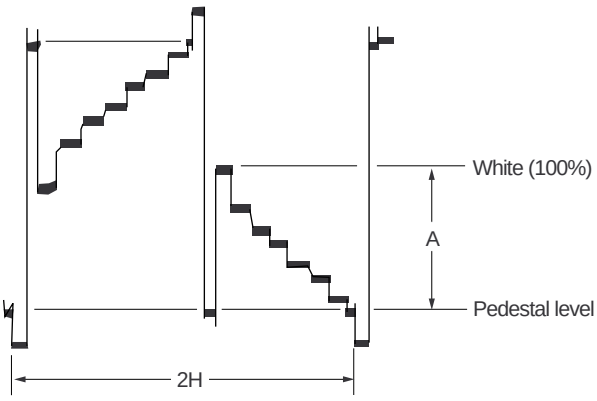

20-5. D RANGE adjustment (Type 2, 3 MODEL)

Purpose : Adjust to the proper LCD panel driving dynamic range.

Adjustment Error : Image will be saturated (whitish) or blackish.

Mode	Playback
Signal	Color bar signal with chroma and burst signals turned OFF.
Measuremant Point	⟨CN1804⟩ pin ② (VG)
Measuring Instrument	Oscilloscope External trigger : ⟨CN1804⟩ pin ④ (HSY)
Adjustment Page	F
Adjustment Address	E0
Specfied Value	Type 2 : A=3.60 ± 0.05Vp-p (PAL) Type 3 : A=3.65 ± 0.05Vp-p (NTSC)

	LCD size	LCD board
Type 1	2.5 inch (PAL only)	PD-74/SD-24
Type 2		PD-75/SD-25
Type 3	3.0 inch (NTSC)	PD-77
Type 4	3.5 inch (NTSC/PAL)	PD-76

No mark : Type 1, Type 4
⟨ ⟩ : Type 2, Type 3

Note 1 : Set the BRIGHT control volume to their mechanical center during adjustment.

Adjustment procedure :

Order	Page	Address	Data	Procedure
1	6	00	01	After setting the data, press the PAUSE button. (Preparation)
2	F	E0		Change the data of page : F address : E0, and adjust the amplitude level (A) of the VG signal to the specified value. Amplitude : Level difference between the reverse waveform pedestal and non-reversed waveform pedestal.
3				Press the PAUSE button.
4	6	00	00	After setting the data, press the PAUSE button. (End)

NTSC MODEL

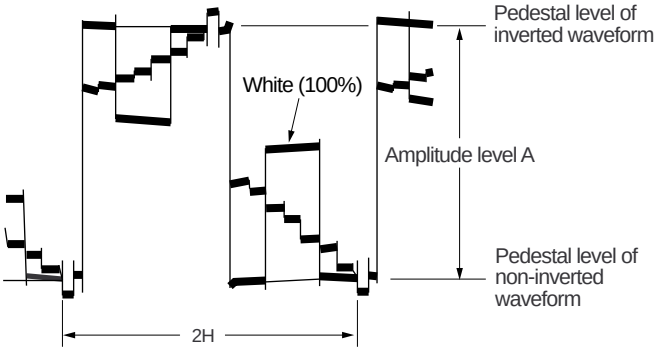

PAL MODEL

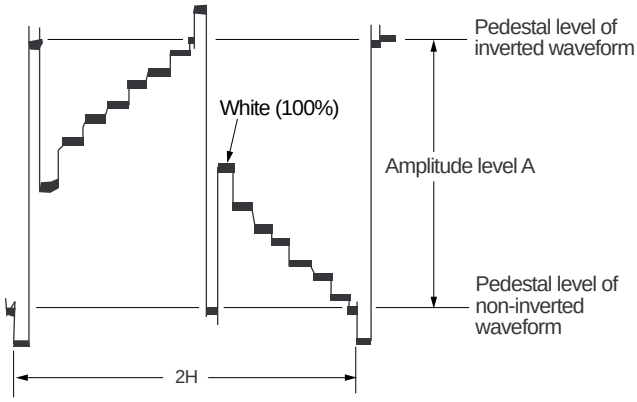

21-6. V-COM level adjustment (Type 2, 3 MODEL)

Purpose : Set to contrast of the image.
Adjustment Error : Image will be blue (whitish) or saturated.

Mode	STOP or Playback
Signal	Color bar signal with chroma and burst signals turned OFF
Measurement point	⟨CN1804⟩ pin ⑧ (COM-O)
Measuring equipment	Oscilloscope
Adjustment page	F
Adjustment address	E1
Specification	Type 2 : A=6.60 ± 0.05Vp-p Type 3 : A=6.85 ± 0.05Vp-p

	LCD size	LCD board
Type 1	2.5 inch (PAL only)	PD-74/SD-24
Type 2		PD-75/SD-25
Type 3	3.0 inch (NTSC)	PD-77
Type 4	3.5 inch (NTSC/PAL)	PD-76

No mark : Type 1, Type 4
⟨ ⟩ : Type 2, Type 3

Note 1 : Set the BRIGHT control volume to their mechanical center during adjustment.

Adjustment procedure:

Order	Page	Address	Data	Procedure
1	6	00	01	After setting the data, press the PAUSE button. (Preparation)
2	F	E1		Change the data of page : F, address : E1, and adjust the V-COM level (A) to the specified value.
3				Press the PAUSE button.
4	6	00	00	After setting the data, press the PAUSE button. (End)

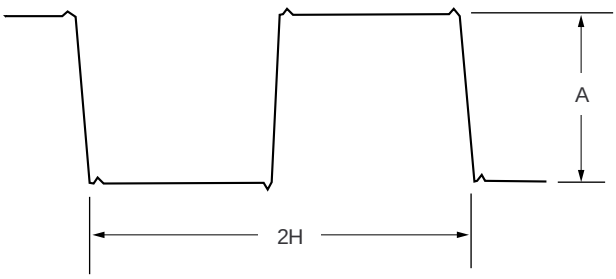

20-7. COLOR adjustment

Purpose : Adjusts color for standard level.
Adjustment Error : Color will be too much or too small.

Mode	Playback
Signal	Color bar signal (with chroma and burst signals)
Measurement point	CN804 〈CN1804〉 pin ② (VG)
Measuring equipment	Oscilloscope [External trigger : CN804 〈CN1804〉 pin ④ (HDB) 〈HSY〉]
Adjustment page	F
Adjustment address	D9
Specification	Type 1 : A=–0.20 ± 0.05Vp-p (PAL) Type 2 : A=–0.25 ± 0.05Vp-p (PAL) Type 3 : A=+0.12 ± 0.05Vp-p (NTSC) Type 4 : A=+0.12 ± 0.05Vp-p (NTSC) Type 4 : A=–0.20 ± 0.05Vp-p (PAL) • Green levelwith reference to white 100% (PAL) • Green levelwith reference to white 75% (NTSC)

	LCD size	LCD board
Type 1	2.5 inch (PAL only)	PD-74/SD-24
Type 2		PD-75/SD-25
Type 3	3.0 inch (NTSC)	PD-77
Type 4	3.5 inch (NTSC/PAL)	PD-76

No mark : Type 1, Type 4
〈 〉 : Type 2, Type 3

Note 1 : In the PAL models, perform the BURST CLEAN adjustment first.
Note 2 : Set the BRIGHT control volume to their mechanical center during adjustment.

Adjustment procedure:

Order	Page	Address	Data	Procedure
1	6	00	01	After setting the data, press the PAUSE button. (Preparation)
2	F	D9		Change data using the PLAY and STOP buttons until the amplitude (A) has the specified value.
3				Press the PAUSE button.
4	6	00	00	After setting the data, press the PAUSE button. (End)

Note : To adjust the type 3, 4 machine, increase the data of page : F, address : DD by 10h before starting adjustment.
To adjust the type 2 machine, decrease the data of page : F, address : D8 by 12h before starting adjustment.
After adjustment is completed, return the data to the original value. (Remove the effect of gamma.)

NTSC MODEL

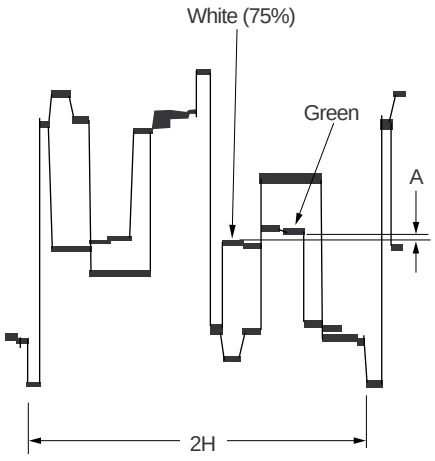

PAL MODEL

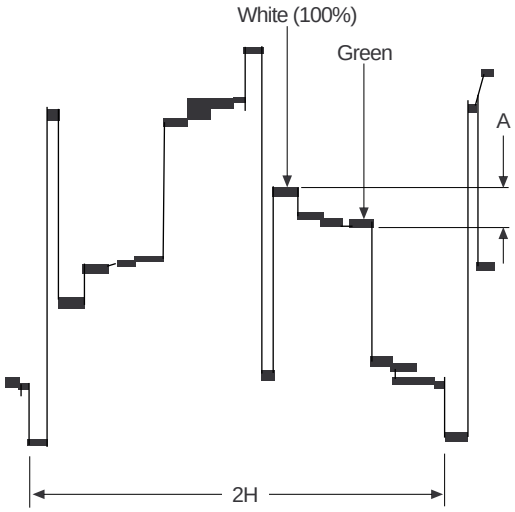

20-8. HUE adjustment (NTSC MODEL)

Purpose : Adjust for standard hue.
Adjustment Error : Unnatural hue.

Mode	Playback
Signal	Color bar signal (with chroma and burst signals)
Measurement point	CN804 ⟨CN1804⟩ pin ② (VG)
Measuring equipment	Oscilloscope [External trigger : CN804 ⟨CN1804⟩ pin ④ (HDB) ⟨HSY⟩]
Adjustment page	F
Adjustment address	DA
Specification	Type 3 : A=0.08 ± 0.05Vp-p Type 4 : A=0.13 ± 0.05Vp-p Cyan level with reference to yellow

Note 1 : Set the BRIGHT control volume to their mechanical center during adjustment.

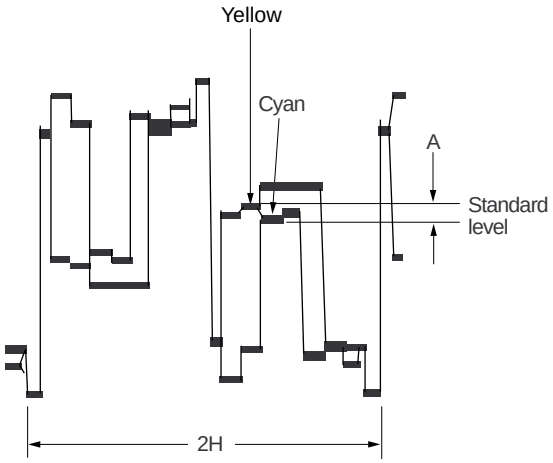

Adjustment procedure:

Order	Page	Address	Data	Procedure
1	6	00	01	After setting the data, press the PAUSE button. (Preparation)
2	F	DA		Change data using the PLAY and STOP buttons until the amplitude (A) has the specified value.
3				Press the PAUSE button.
4	6	00	00	After setting the data, press the PAUSE button. (End)

Note : To adjust the type 3, 4 machine, increase the data of page : F, address : DD by 10h before starting adjustment. After adjustment is completed, return the data to the original value. (Remove the effect of gamma.)

	LCD size	LCD board
Type 1	2.5 inch (PAL only)	PD-74/SD-24
Type 2		PD-75/SD-25
Type 3	3.0 inch (NTSC)	PD-77
Type 4	3.5 inch (NTSC/PAL)	PD-76

No mark : Type 1, Type 4
⟨ ⟩ : Type 2, Type 3

20-9. BURST CLEANING adjustment (PAL MODEL)

Purpose : Adjust for standard hue.
Adjustment Error : Unnatural hue.

Mode	Playback
Signal	Color bar signal (with chroma and burst signals)
Measurement point	CN804 ⟨CN1804⟩ pin ③ (VB)
Measuring equipment	Oscilloscope [External trigger : CN804 ⟨CN1804⟩ pin ④ (HDB) ⟨HSY⟩]
Adjustment page	F
Adjustment address	DA
Specification	Minimum amplitude of the flicker of the red position.

Note 1 : Perform this adjustment before COLOR adjustment.
Note 2 : Set the BRIGHT control volume to their mechanical center during adjustment.

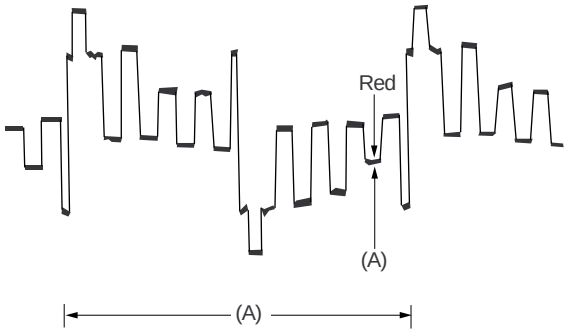

Adjustment procedure:

Order	Page	Address	Data	Procedure
1	6	00	01	After setting the data, press the PAUSE button. (Preparation)
2	F	DA		Change data using the PLAY and STOP buttons until the amplitude (A) has the specified value.
3				Press the PAUSE button.
4	6	00	00	After setting the data, press the PAUSE button. (End)

20-10. V. COM adjustment

Purpose : Adjusts for correct voltage of the DC bias voltage of the common electrode signal of the LCD panel.

Adjustment Error : Details of the LCD picture will be lost. Flicker occurs easily. Vertical stripes will appear.

Mode	Playback PAUSE
Signal	Alignment tape: color bar for operation check segment WR5-4CL (PAL) WR5-4NL (NTSC)
Measurement point	To be confirmed on LCD display
Measuring equipment	
Adjustment page	F
Adjustment address	DF

	LCD size	LCD board
Type 1	2.5 inch (PAL only)	PD-74/SD-24
Type 2		PD-75/SD-25
Type 3	3.0 inch (NTSC)	PD-77
Type 4	3.5 inch (NTSC/PAL)	PD-76

No mark : Type 1, Type 4
〈 〉: Type 2, Type 3

Adjustment procedure:

Order	Page	Address	Data	Procedure
1	6	00	01	After setting the data, press the PAUSE button. (Preparation)
2				Establish the PB PAUSE state using operation keys of the camera.
3	F	DF		Change data using the PLAY and STOP buttons of the adjustment remote commander and observe the noise bar portion. Find the noise bar showing noise similar to head clogging. Keep pressing the PLAY button until black dots can be seen clearly. This data is DA. Then keep pressing the STOP button until black dots can be seen clearly. This data is DB.
4				Convert the DA and DB to the decimal value which are DA' and DB'. (Use page 6-13 〈How to convert the hexadecimal number to decimal number〉 or “Hexadecimal-Decimal Conversion Table”.) Then calculate DC' using the equation DC'= (DA' + DB') ÷ 2
5	F	DF		Set data to DC and press the PAUSE button.
6	6	00	00	After setting the data, press the PAUSE button. (End)

Note : This adjustment must be executed after the BRIGHT and CONTRAST adjustments are completed.

When the data is increased from the initial value.

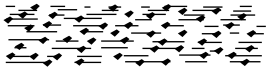

Noise bar

Enlarged

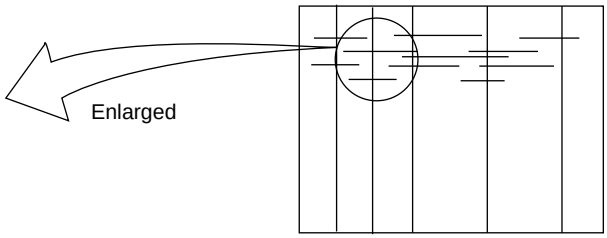

Pattern as if head clog occurs.

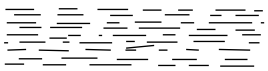

When the data is decreased from the initial value.

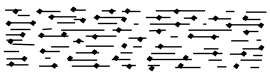

20-11. White balance adjustment

Purpose : Adjust for correct white balance.
Adjustment Error : Color reproduction on LCD display will be poor.

Mode	Playback
Signal	Color bar signal with chroma and burst signals turned OFF
Measurement point	To be confirmed on LCD display
Measuring equipment	
Adjustment page	F
Adjustment address	DB, DC
Specification	Image on the LCD display must not have any color.

	LCD size	LCD board
Type 1	2.5 inch (PAL only)	PD-74/SD-24
Type 2		PD-75/SD-25
Type 3	3.0 inch (NTSC)	PD-77
Type 4	3.5 inch (NTSC/PAL)	PD-76

No mark : Type 1, Type 4
〈 〉: Type 2, Type 3

Note 1 : Start adjustment within 30±5 seconds after the back-light turns ON.
Note 2 : Confirm that the item “LCD B.L” is set to “BRIGHT” using menu.
Note 3 : Set the BRIGHT control volume to their mechanical center during adjustment.

Adjustment procedure:

Order	Page	Address	Data	Procedure
1	6	00	01	After setting the data, press the PAUSE button. (Preparation)
2	F	DB DC		Change the DB and DC data using the PLAY and STOP buttons until the image on the LCD display has no color.
3				Press the PAUSE button.
4	6	00	00	After setting the data, press the PAUSE button. (End)

6-2. MECHANISM SECTION ADJUSTMENTS

Refer to the separate "8 mm Video Mechanism Section Adjustment Manual Ⅶ B Mechanism " for adjustment, check procedure and mechanical parts replacement.

2-1. HOW TO OPERATE THE MECHANISM AFTER THE CASSETTE COMPARTMENT IS REMOVED

1. How to load a cassette tape:

1) Refer to "1. Disassembly" and turn the main power on with the cabinet and camera section removed. (It enables to operate the mechanical deck.)
2) Connect the adjustment remote commander and set the NORM -ADJUST (HOLD) switch to ADJUST (ON) position.
3) Check that the main power is being supplied.
4) Select page : 6, address: 00, set data : 01 and press the PAUSE button.
5) Select page : F, address: 02, set data : 01 and press the PAUSE button.
6) Turn off the power supply once, then turn it on.
7) Set the NORM-ADJUST (HOLD) switch to NORM (OFF) position. (The adjustment remote commander can be disconnected hereafter.)
8) Press the push-switch-1 knob in the direction of arrow which sets the machine into loading mode.
   PB, FF/REW and CUE/REV operations are possible.
9) After completing all steps of above operation, be sure to perform "4. Processing after operation".

2. How to establish RECORD mode:

1) Press pin of the push-switch 2 (ON state) and keep the ON state by fixing with adhesive tape.
2) Turn the main power switch ON (select VTR or CAMERA position of camera).
3) Set the RECORD switch to ON.
   (When the test mode is selected, the rotation detection of the S and T reel tables is muted, and the top end sensor is disable which allow to run the tape.)

3. How to eject a cassette tape:

1) Press the EJECT switch to ON.

4. Processing after operation

1) Connect the adjustment remote commander and set the NORM - ADJUST (HOLD) switch to ADJUST (ON) position.
2) Select page 6, address : 00, set data : 01 and press the PAUSE button.
3) Select page: F, address : 02, set data : 00 and press the PAUSE button.
4) Remove the power supply to the machine.

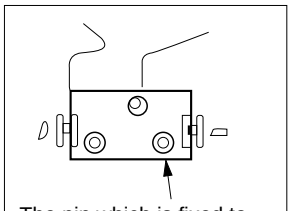

The pin which is fixed to the pressed position of the push-switch (3 keys). (Other pins can be pressed too.)

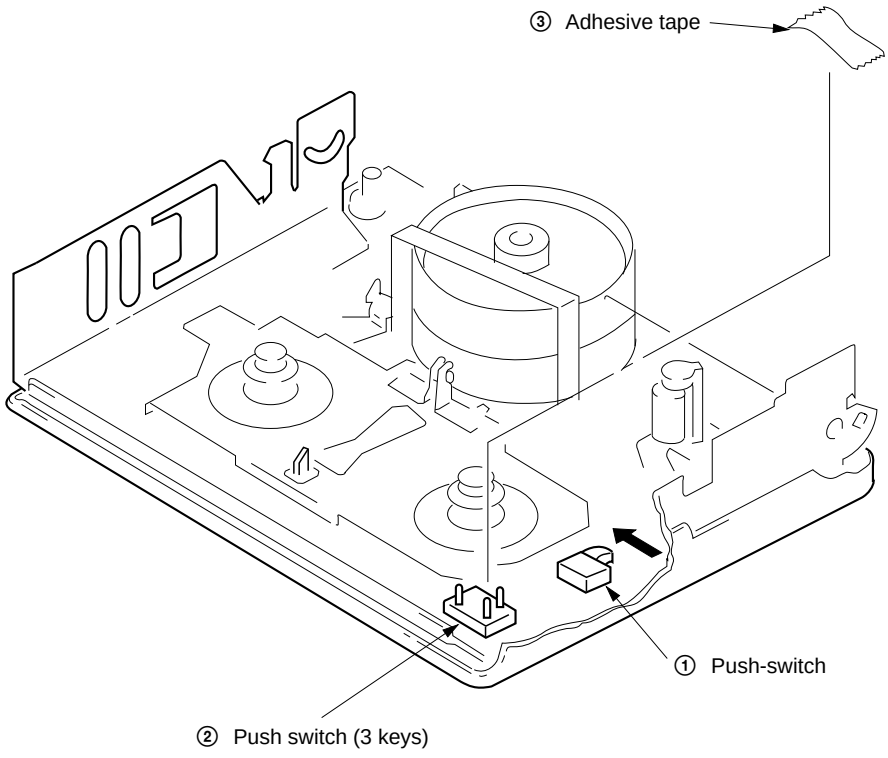

2-2. TAPE PATH ADJUSTMENT

Purpose : Adjusts the head linearity.
Adjustment Error : Noise appears on top and bottom of display when playing back the tape recorded by other machines.

1. Preparations for adjustments

1) Clean the tape running surface (tape guide, drum, capstan, pinch roller).
2) Connect the adjustment remote commander to the REMOTE terminal (JACK block).
3) Set the NORM-ADJUST (HOLD) switch to ADJUST (ON) position.
4) Check that the main power is being supplied.
5) Select page : 6, address : 00, set data : 01 and press the PAUSE button.
6) Select page : F, address : 02, set data : 03 and press the PAUSE button.
7) Turn off the power supply once, then turn it on.
8) Connect an oscilloscope.
   CH1: VC-188 board CN102 pin ①.
   External trigger : VC-188 board CN102 pin ⑧.
9) Playback the tracking alignment tape.
   WR5-1NP : NTSC
   WR5-1CP : PAL
10) Check to see that RF waveform is flat at input and exit sides on oscilloscope.
    If it not flat. Tape Path Adjustment" of the 8mm Video Mechanism Section Adjustment Manual Ⅶ B Mechanism .
11) After completing the adjustment, perform "2-1-4. Processing after operation".

VC-188 board CN102

1	PB RF
2	REC 2
3	GND
4	EMPH IN
5	CAM Y IN
6	DEEMPH OUT
7	BPF ADJ
8	RF SWP
9	CAP FG

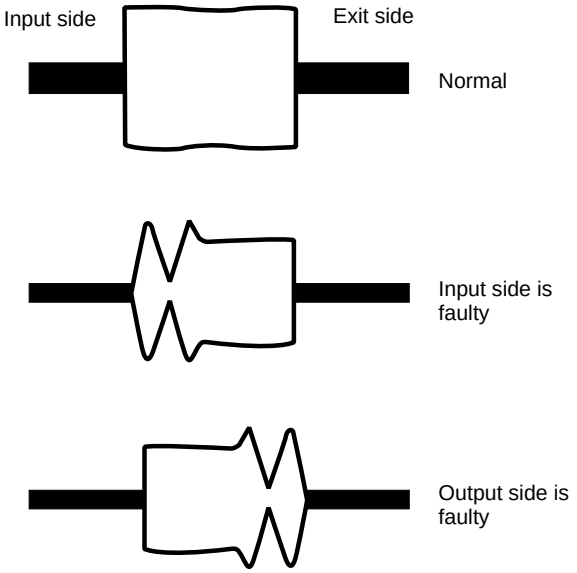

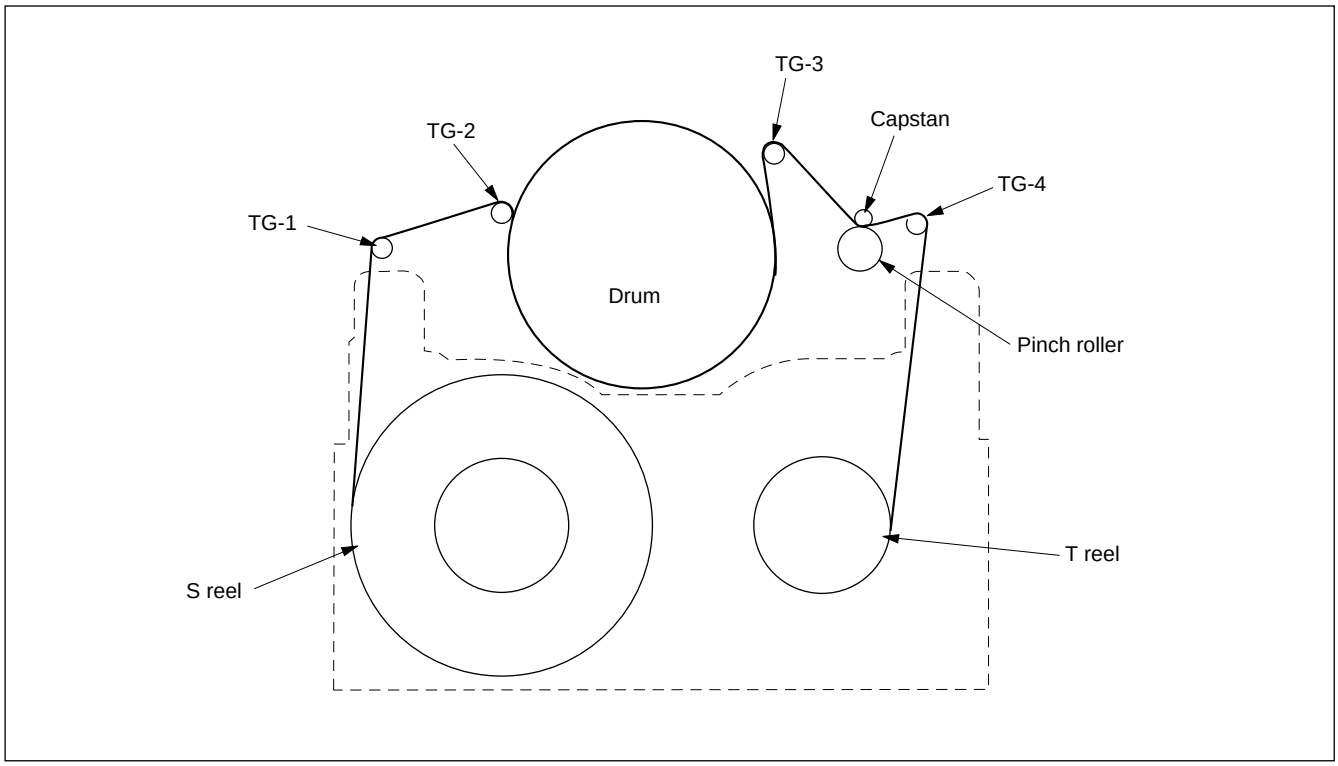

6-3. VIDEO SECTION ADJUSTMENT

When performing adjustments, refer to the layout diagrams for adjustment related parts beginning from page 6-86.

Perform the video section adjustment in the sequence as described.

[Adjustment sequence]

1) System control system adjustment
   1. Battery down voltage adjustment
   2. Battery down voltage check
2) Servo system adjustment
   1. SYNC level and BURST level adjustment.
   2. Switching position adjustment
   3. Capstan FG offset adjustment
3) Playback frequency response characteristics adjustment
4) DEMD OUT level adjustment
5) YD OUT LEVEL adjustment
6) PB Chroma level check
7) PB Y out level adjustment
8) FE OSC check
9) Emphasis input level adjustment
10) Y FM deviation adjustment
11) Y FM carrier frequency adjustment
12) Chroma emphasis fo adjustment
13) REC Y level adjustment
14) REC L level adjustment
15) REC C level adjustment

3-1. PREPARATIONS BEFORE ADJUSTMENT

The following measuring equipment are used for video section adjustment.

3-1-1. Equipment required

1) Monitor TV
2) Oscilloscope, dual trace, 30MHz bandwidth or more with delay mode function.
   (Use 10 :1 probe unless otherwise specified.)
3) Frequency counter
4) Digital voltmeter
5) Audio generator
6) Audio level meter
7) Audio distortion meter
8) Audio attenuator
9) Regulated power supply
10) Alignment tape
    ⟨For PAL model⟩
    • For tracking adjustment (WR5-1CP)
      Parts code : 8-967-995-07
    • For normal mode video frequency response adjustment (WR5-6C)
      Parts code : 8-967-995-17
    • For confirmation of normal mode operation
      for SP (WR5-5CSP)
      Parts code : 8-967-995-47
      or (WR5-4CSP)
      Parts code : 8-967-995-46
      or (WR5-9CS)
      Parts code : 8-967-995-28
      for LP (WR5-4CL)
      Parts code : 8-967-995-56
    ⟨For NTSC model⟩
    • For tracking adjustment (WR5-1NP)
      Parts code : 8-967-995-02
    • For normal mode video frequency response adjustment (WR5-6N)
      Parts code : 8-967-995-12
    • For confirmation of normal mode operation
      for SP (WR5-5NSP)
      Parts code : 8-967-995-42
      or (WR5-4NSP)
      Parts code : 8-967-995-41
      or (WR5-9NS)
      Parts code : 8-967-995-23
      for LP (WR5-4NL)
      Parts code : 8-967-995-51

3-1-2. Precautions on adjustment

The EVF (electronic viewfinder) is not necessary for video section adjustment.
Remove the following connector to remove the EVF.

1. CF-45/46 board CN403 (8-pin) : B/W EVF model
   CF-45/46 board CN404 (16-pin) : COLOR EVF model

The audio board (MA-296/297) board is not necessary except for "Audio System Adjustments". Remove the following connectors.

1. VC-188 board CN501 (12-pin)

After completing all adjustments, release the adjustment mode by either of the following two methods.

1) Remove the lithium battery. (In this case, data time and menu setting by users are erased. Input these data again.)
2) Return the data of the address : 00 on page : 6 to 00. If the page : 2 data is changed, return the data to the original value.

3-1-3. Adjustment connector (VC-188 Board CN102)

Some video section adjustment points are concentrated to the VC-188 board CN102. Connect the measuring equipment via the tool (Multi CPC: J-6082-311-A).

Pin No.	Signal Name
1	PB RF
2	REC 2
3	GND
4	EMPH IN
5	CAM Y IN
6	DEEMPH OUT
7	BPF ADJ
8	RF SWP
9	CAP FG

3-1-4. Equipment connection

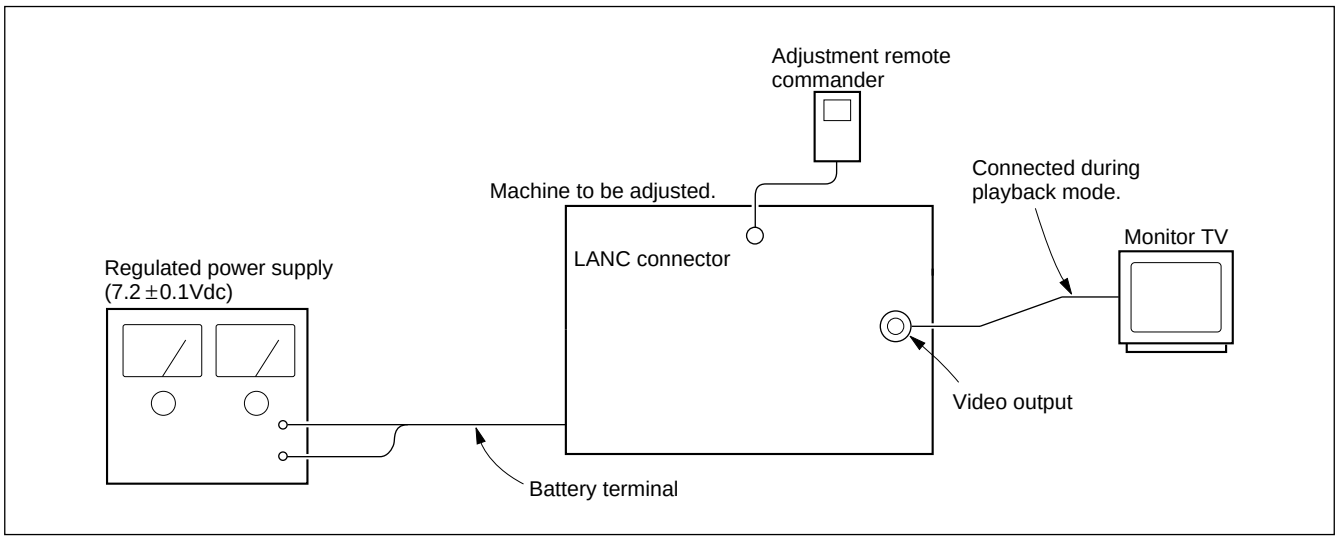

3-1-5. Alignment tape

The following table shows the alignment tapes available.
Use the tape specified in the signal column for each adjustment.
If tape type is not specified in the adjustments which use the "Operation Check" tape, use any type of tape for the checking purpose.

Name	Record Mode	Tape Type	Tape Speed	Use
Tracking WR5-1CP/1NP	Normal	MP	SP	Tape path adjustment Switching position adjustment
Video frequency response adjustment WR5-6C/6N	Normal	MP	SP	Frequency response adjustment
Operation check (SP mode) WR5-5CSP/5NSP	Normal	MP	SP	Operation check
Operation check WR5-4CL/4NL	Normal	MP	LP	
Operation check WR5-9CS/9NS	Normal	MP	SP	

Note : Tape type
MP — Metal particle tape

The color bar signal which is recorded in the alignment tape.

Note : Measured at video input/output connector (across 75 Ω termination).

PAL MODEL

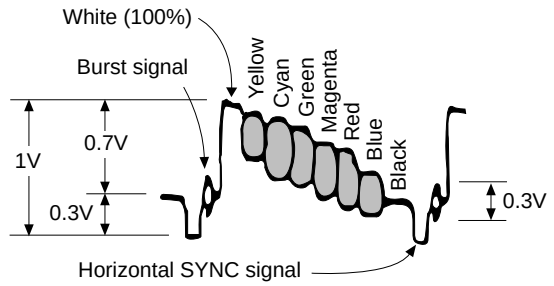

Color bar signal waveform

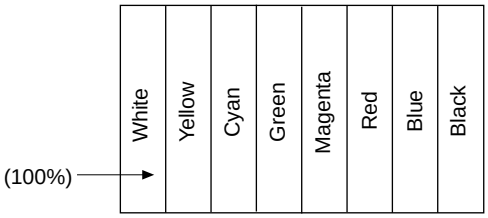

Color bar pattern

Color bar signal of PAL alignment tape

NTSC MODEL

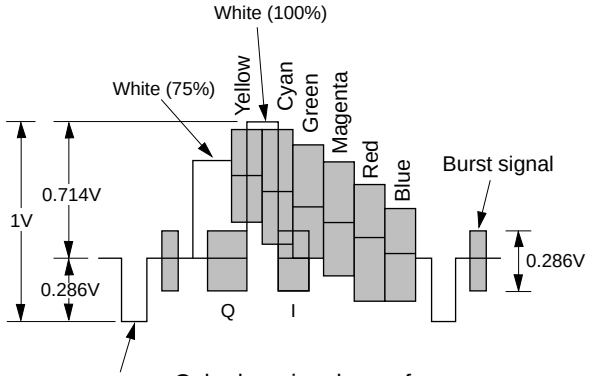

Color bar signal waveform

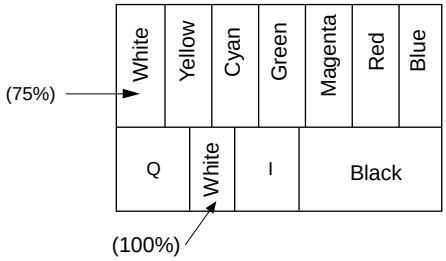

Color bar pattern

Color bar signal of NTSC alignment tape

3-1-6. Output level and impedance

Video output — Pin jack
Output signal : 1Vp-p, 75Ω unbalanced, sync negative

Audio output — Pin jack
Input level : –7.5dBs (across 47kΩ load))
Output impedance : 2.2kΩ or less

3-2. ADJUSTMENT POINTS WHEN MAJOR PARTS ARE REPLACED

1. When drum is replaced:

"Tape Path Position Adjustment" of mechanical section adjustment
"PB RF frequency response characteristics adjustment" of the video section adjustment
"Switching position adjustment" of the servo section adjustment

3-3. POWER SUPPLY SYSTEM ADJUSTMENT

1. Power supply voltage check (VC-188 board)

Mode	Camera record
Subject	Any subject
Measuring Equipment	Digital voltmeter
MT5V check	
Measuring Point	CN301 pin ㉚
Specification Value	5.0 ± 0.15Vdc
DIG 3V check	
Measuring Point	CN301 pin ㉓
Specification Value	3.16 ± 0.1Vdc
AU 3 V check	
Measuring Point	CN501 pin ⑤
Specification Value	3.18 ± 0.1Vdc
EVF 5V check (camera mode)	
Measuring Point	CN301 pin ㉟㊱
Specification Value	4.85 ± 0.15Vdc
EVF15 V check	
Measuring Point	CN301 pin ㉞
Specification Value	14.95 ± 0.4Vdc

2. VTR & CAM mode ON

Mode	Stop
Signal	Any signal
Adjustment Page	F
Adjustment Address	02

Adjustment procedure:

Order	Page	Address	Data	Procedure
1				Set the remote commander (RM-95) to HOLD (adjustment position), and turn on the UNREG power supply.
2	6	00	01	After setting the data, press the PAUSE button. (Preparation)
3	F	02	03	After setting the data, press the PAUSE button.
4				Turn off the UNREG power supply once, then turn it on.

How to cancel the VTR &CAM mode ON.

Order	Page	Address	Data	Procedure
1	6	00	01	After setting the data, press the PAUSE button.
2	F	02	00	After setting the data, press the PAUSE button.
3				Turn off the UNREG power supply once, then turn it on.

3. EMG code (Emergency code)

The emergency codes are stored in the addresses : E4, E8 and EC corresponding to the type of errors occurred. Types of error code are shown in the following table.

Code	Error Status
00	No error
10	Loading motor error during loading
11	Loading motor error during unloading
20	T reel error during unloading
21	S reel error during unloading
22	T reel error in normal mode
23	S reel error in normal mode
30	FG error during capstan startup
31	FG error during capstan normal speed
40	FG error during drum startup
41	FG error during drum startup
42	FG error during normal rotation of drum
43	Not used
44	Phase error during normal rotation of drum

4. MSW code

- The lower digit data of the page F : address : E6, EA and EE indicate the MSW code (mode switch code) when an error occurs.
- The upper digit data of the page F : address : E6, EA and EE indicate the MSW code (mode switch code) of mode transition (mode SW code before mode transition) when an error occurs.
- The lower digit data of the page F: address: E7, EB and EF indicate the MSW code (mode switch code) of transition target (code to which the machine is going to enter) when an error occurs.

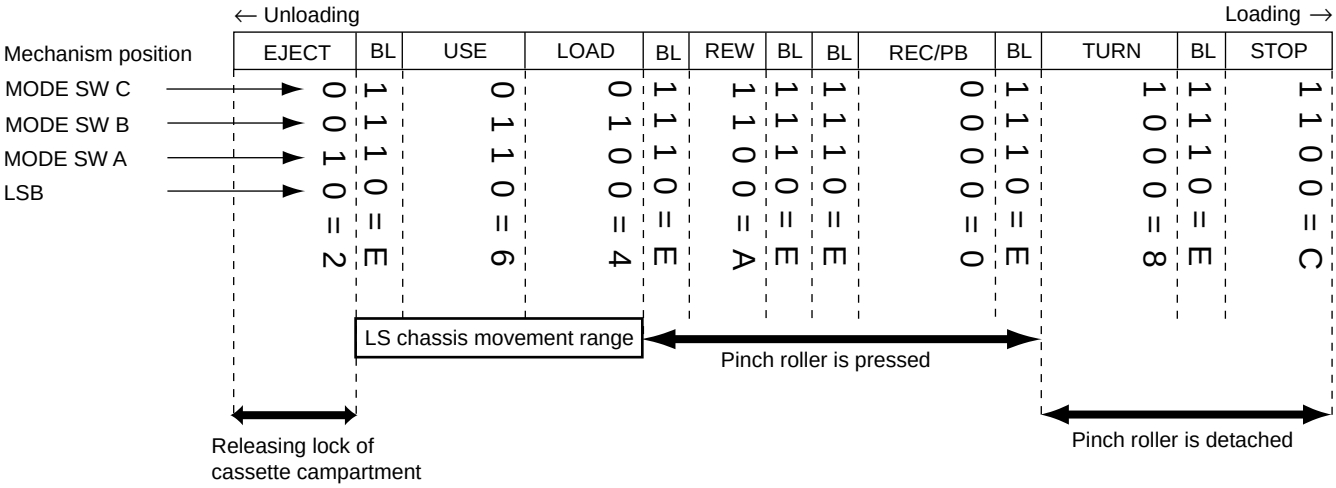

Mechanism Position	MSW Code	Detail of Content
EJECT	2	The position where the cassette compartment lock is released. The end position in the unthread-end direction. The mechanism does not move any more in the direction of unloading direction.
BL	E	Blank code. The code which separates a code from another code. The machine does not stop at the code while is it operating.
USE	6	EJECT completed position. If a cassette is ejected, it stops at this position. If mechanism moves in the loading direction, the TG1 guide and the TG9 guide start moving.
LOAD	4	The code during loading and unloading. This code is output while the LS chassis is moving.
REW	A	REW position. The position to activate the REW and FR/REV.
RP	0	PB, REC, CUE REV and PAUSE position. The pinch roller is pressed and the tension regulator is turned ON.
TURN	8	The position which is used to move the swing gear from S to T or from T to S. Normal STOP position.
STOP	C	The pinch roller is detached, tension regulator is turned OFF, and both reels are braked. Mechanism does not move any more in the loading direction.

5. Bit value discrimination

Bit values must be discriminated using the display data of the adjustment remote commander for the following items. Us the table below to discriminate if the bit value is “1” or “0”.

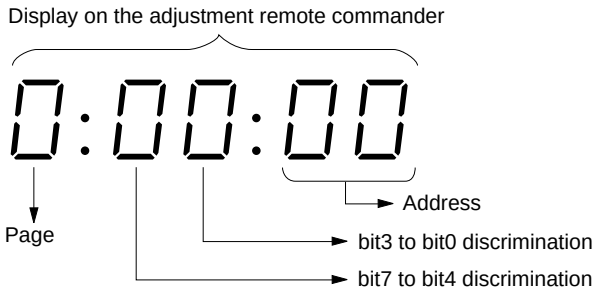

(Example) If the remote commander display is “8E”, bit value from bit 7 to bit 4 can be discriminated from the column Ⓐ, and those from bit 3 to bit 0 from column Ⓑ.

	Display on the adjustment remote commander	Bit values			
		bit3 or bit7	bit2 or bit6	bit1 or bit5	bit0 or bit4
	0	0	0	0	0
	1	0	0	0	1
	2	0	0	1	0
	3	0	0	1	1
	4	0	1	0	0
	5	0	1	0	1
	6	0	1	1	0
	7	0	1	1	1
Ⓐ	8	1	0	0	0
	9	1	0	0	1
	A (R)	1	0	1	0
	B (b)	1	0	1	1
	C (C)	1	1	0	0
	D (d)	1	1	0	1
Ⓑ	E (E)	1	1	1	0
	F (F)	1	1	1	1

6. Initializing the emergency code area

(Caution) Perform the initializing operation only when the past emergency codes can be deleted.

Operating procedure:

Order	Page	Address	Data	Procedure
1	6	00	01	After setting the data, press the PAUSE button. (Preparation)
2	6	11	00	After setting the data, press the PAUSE button.
3	6	01	4D	After setting the data, press the PAUSE button.
4	6	11	01	After setting the data, press the PAUSE button.
5	F	E4~EF	00	After setting the data, press the PAUSE button.
6	6	01	00	After setting the data, press the PAUSE button.
7	6	00	00	After setting the data, press the PAUSE button. (End)

7. LED check

Data	Operation
00	Normal
10	Tally LED lights.

Operating procedure:

Order	Page	Address	Date	Procedure
1				Turn CAM POWER ON.
2				Check LED.
3	2	00	00	After setting the data, press the PAUSE button.
4	2	A0	10	Tally LED light.

8. Key input check (CF-45/46 Board IC 402 ㉗, ㉘, S415, S/S MODE SW)

Bit	Key Switch	Switch Condition
Bit0 : 0 Bit1 : 0		
Bit0 : 1 Bit1 : 0	5 SEC	“1”=OFF “0”=ON
Bit0 : 0 Bit1 : 1		

Operating procedure:

Order	Page	Address	Data	Procedure
1	2	00	01	After setting the data, press the PAUSE button.
2	2	20		ON/OFF of each key switch can be known by discriminating the bit value of each display data.

9. Key input check

Bit	Key Switch	Switch Condition
0		
1		
2	Cassette eject	"1" =OFF
3	Video power supply (PLAYER) (VTR : E model)	"0"=ON
4	CC DOWN	
5	Start/Stop	
6	Camera power supply (CAM + STBY)	

Operating procedure:

Order	Page	Address	Data	Procedure
1	2	00	3F	After setting the data, press the PAUSE button.
2	2	01		ON/OFF of each key switch can be known by discriminating the bit value of each display data.

10. Key input check (A/D port)

• CF-45/46 board

Address \ Display data	00 ~ 0B	0C ~ 27	28 ~ 49	4A ~ 76	77 ~ A9	AA ~ E3	E4 ~ FF
2F (KEY AD0 : IC402 ㉜)	• STOP (VC-188 board S302)	• FF (VC-188 board S303)	• PB (VC-188 board S304)	• REW (VC-188 board S305)	• EDIT (+) (VC-188 board S306)	• EDIT (–) (VC-188 board S307)	
30 (KEY AD1 : IC402 ㉝)	• TITLE (S412)	• PICTURE EFFECT (S413)	• MENU (S414)	• PAUSE (VC-188 board S301)	• IR (VC-188 board S308)		
31 (KEY AD2 : IC402 ㉞)	• DATE (S411)	• BACK LIGHT (S410)	• FADER (S409)	• DISPLAY (S408)	• END SEARCH (S407)		
32 (KEY AD3 : IC402 ㉟)	• TIME (S406)	• COUNTER RESET (S405)	•EXECUTE (S401)	• WIDE (S404)			
33 (KEY AD4 : IC402 ㊱)	• PROGRAM AE *(S991)〈S1991〉	• VOLUME (–) *(S992)〈S1992〉	• VOLUME (+) *(S993)〈S1993〉	• LCD BRT (–) *(S994)〈S1994〉	• LCD BRT (+) *(S995)〈S1995〉		
37 (PROGRAM AE : IC402 ㊶)	PORTRAIT	SPORTS	HI-SPEED	TWILIGHT			AUTO
	(S416)						

* : ( ) SD-24, PD-74/76 BOARD
〈 〉 SD-25, PD-75/77 BOARD

Operating procedure:

Order	Page	Address	Data	Procedure
1	2	00	01	After setting the data, press the PAUSE button.
2	2	37 2F to 33		From the display data of each address, it can be known which key is being pressed.

11. Individual operation of drum, capstan and loading motor

Data	Operation
00	Normal
02	Drum rotation in normal direction
06	Capstan rotation in normal direction
08	Capstan rotation in reverse direction
0A	Loading motor rotation in normal direction
0C	Loading motor rotation in reverse direction
01	All motors stop.
03	
05	
07	
09	
0B	
0D	
0F	

Note : Check the motors after removing the tape.

Operating procedure:

Order	Page	Address	Data	Procedure
1	2	00	02	After setting the data, press the PAUSE button.
2	7	0E	01	Individual operation of motors is approved.
3	7	11		Motor can be operated individually by setting the above described data.
4				Turn the main power (7.2V) OFF.

12. Drum use history check

Page 0	Address 02 to 04

Address	Function		Remarks
02	Accumulated drum rotation time (BCD code)	Hour	10th digit and 1st digit of the accumulated time (decimal numbers)
03		×100 Hour	1000th digit and 100th digit of the accumulated time (decimal numbers)
04		Minute	

How to use:

1) The record of use data is displayed at addresses : 02 to 04 on page 0.

Note : This data will be cleared when the button battery is removed (reset). Be sure to read the data before disassembling the set.

3-4. SYSTEM CONTROL SYSTEM ADJUSTMENTS

1. Battery down voltage adjustment

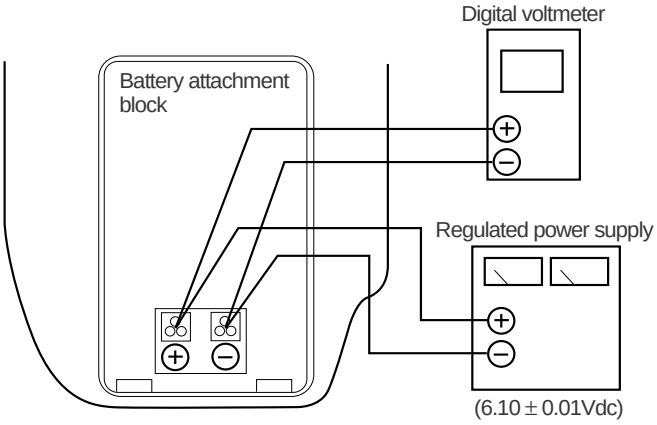

Purpose : Sets the end voltage of battery discharge.
Adjustment Error : Usable period of a battery will be shortened, or picture will be distorted at the battery end.

Mode	Camera record
Subject	Any subject
Measurement Point	LCD display of the adjustment remote commander
Measuring Instruments	
Adjustment Page	F
Adjustment Address	26, 27, 28, 29, 2A

Note 1 : Set the AUTO FOCUS to OFF (MANUAL).

Adjustment procedure:

Order	Page	Address	Data	Procedure
1				Adjust the output voltage of the regulated power supply so that the digital voltmeter indicates 6.10 ± 0.01Vdc.
2				Insert a cassette and enter the camera recording mode. (CAM REC) After CAM REC is stabilized (after elapse of about 5 seconds or more), proceed to the next step.
3	6	00	01	After setting the data and press the PAUSE button of the adjusting remote commander.
4				Adjust the output voltage of the regulated power supply so that the digital voltmeter indicates 5.50 ± 0.01Vdc.
5	2	00	01	After setting the data and press the PAUSE button of the adjusting remote commander.
6	2	39		Read the data displayed on the adjustment remote commander. This data is named Dref.
7	F	2A		After setting the data Dref and press thePAUSE button of the adjusting remote commander.
8				Convert Dref into the decimal number. The result decimal number is Dref '. (Note 2)
9	F	 26 27 28 29		Calculate the following equation (decimal calculation) to obtain the following adjustment data (decimal number). Convert the adjustment data into hexadecimal numbers respectively, and set the hexadecimal data into the respective adjustment addresses. (Note2) After setting the data, be sure to press the PAUSE button of the adjusting remote commander. Address : 0F D_{0F} ' = Dref '+ 19 Address : 0E D_{0E} ' = Dref '+ 16 Address : 0D D_{0D} ' = Dref '+ 12 Address : 0C D_{0C} ' = Dref '+ 6
10	2	00	00	After setting the data and press the PAUSE button of the adjusting remote commander.
11	6	00	00	After setting the data and press the PAUSE button of the adjusting remote commander.
12				Turn off the main power.

Note 2 : Refer to the “Hexadecimal-Conversion Table” on page 6-12 , or ⟨Conversion between the hexadecimal number to decimal number⟩ and ⟨How to convert the decimal number to hexadecimal number⟩ on page 6-13 of the Service Manual, conversion between decimal number s and hexadecimal numbers.

2. Battery down voltage check

Connection : Same connection as item “1. Battery down voltage adjustment”.

Order	Procedure
1	Adjust the output voltage of the regulated power supply so that the digital voltmeter indicates 6.10 ± 0.01Vdc.
2	Insert a cassette and enter the camera recording mode. (CAM REC)
3	Adjust the output voltage of the regulated power supply so that the digital voltmeter indicates 5.53 ± 0.01Vdc.
4	Confirm that the battery down indication ⏍ on the TALLY LED and EVF flashes at the rate of 0.8Hz.
5	Adjust the output voltage of the regulated power supply so that the digital voltmeter indicates 5.25 ± 0.01Vdc.
6	Confirm that the battery down indication ⏍ on the TALLY LED and EVF flashes at the rate of 3.2Hz.
7	Press the START/STOP key. (CAM STBY)

3-5. SERVO SYSTEM ADJUSTMENTS

1. SYNC level and BURST level adjustments

Purpose : Adjust the sync and burst level of the camera output to the specified values.

Adjustment error : The playback machine can lose lock of the servo systems if the sync level is too low. The playback color will become too thick if the burst level is low.

Mode	Camera record
Subject	Color bar chart: standard picture frame
Measurement point	VIDEO output terminal (terminated in 75Ω)
Measuring equipment	Oscilloscope
Adjustment page	F
Adjustment address	3E (SYNC LEVEL) 3F (BURST LEVEL)
Specifications	SYNC LEVEL : A=300 ± 10mV (PAL) A=286 ± 10mV (NTSC) BURST LEVEL : B=300 ± 6mV (PAL) B=286 ± 6mV (NTSC)

Adjustment procedure:

Order	Page	Address	Data	Procedure
1	6	00	01	After setting the data, press the PAUSE button. (Preparation)
2	6	01	03	After setting the data, press the PAUSE button.
3	F	3E		Change the data using the PLAY and STOP buttons until the SYNC LEVEL (A) satisfies the specification.
4				Press the PAUSE button.
5	F	3F		Change the data using the PLAY and STOP buttons until the BURST LEVEL (B) satisfies the specification.
6				Press the PAUSE button.
7	6	01	00	After setting the data, press the PAUSE button.
8	6	00	00	After setting the data, press the PAUSE button. (End)

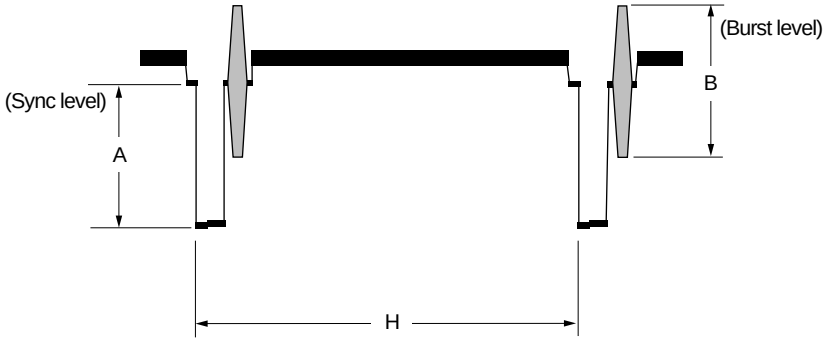

2. Switching position adjustment

Purpose : Removes vertical mechanical error of head assembling.

Adjustment error : Skew picture.

Mode	Playback
Signal	Alignment tape : For adjustment tracking WR5-1CP (PAL) WR5-1NP (NTSC)
Measurement Point	CH1 : ⑧ of CN102 (RF SWP) CH2 : ① of CN102 (PB RF)
Measuring Instrument	Oscilloscope
Adjustment Page	F
Adjustment Address	22, 23 * (24, 25)
Specification Value	t1= 0 ± 10μsec

* : NTSC MODEL only

Adjustment procedure:

Order	Page	Address	Data	Procedure
1	6	00	01	After setting the data, press the PAUSE button. (Preparation)
2	F	23	80	Initial setting.
3	F	23		Change the data with the PLAY and STOP buttons, and minimize t1.
4				Press the PAUSE button.
5	F	22		Change the data with the PLAY and STOP buttons, and minimize t1.
6				Press the PAUSE button.
7				Check that t1 satisfies the specified value. If not, repeat steps 3 to 6 in order.
*8	F	01		Raed the data of page : F, address : 01, and record it.
*9	F	01	10	After setting the data, Press the PAUSE button. (Forced LP head selection)
*10	F	25	80	Initial setting.
*11	F	25		Change the data with the PLAY and STOP buttons, and minimize t1.
*12				Press the PAUSE button.
*13	F	24		Change the data with the PLAY and STOP buttons, and minimize t1.
*14				Press the PAUSE button.
*15				Check that t1 satisfies the specified value. If not, repeat steps 10 to 13 in order.
*16	F	01		Set the data which is recorded in step 8 to this address and press the PAUSE button.
17	6	00	00	After setting the data, press the PAUSE button. (End)

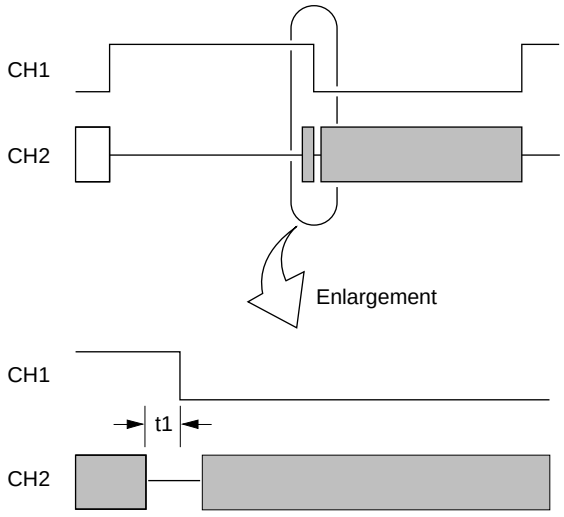

3. Capstan FG offset adjustment

Purpose : Adjusts duty ratio of capstan FG signal
Adjustment error : Jitter can increase.

Mode	CAM-REC (SP)
Signal	Any signal
Measurement Point	CN102 pin ⑨
Measuring Instrument	Oscilloscope
Adjustment Page	F
Adjustment Address	2B
Specification Value	Duty = 50 ± 1.5%

Adjustment procedure:

Order	Page	Address	Data	Procedure
1	6	00	01	After setting the data, press the PAUSE button. (Preparation)
2	F	2B	80	After setting the data, press the PAUSE button.
3	F	2B		Change data using PLAY and STOP buttons so that the duty ratio A/B satisfies the specification.
4				Press the PAUSE button.
5	6	00	00	After setting the data, press the PAUSE button. (End)

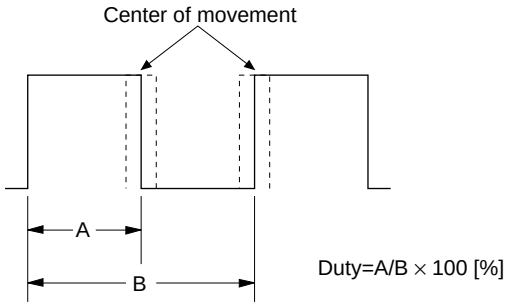

3-6. PLAYBACK FREQUENCY RESPONSE CHARACTERISTICS ADJUSTMENT

Purpose : Remove variation of picture quality between heads due to difference of characteristics.

Adjustment error : Flicker or over-modulation of playback picture.

Mode	Playback
Signal	Alignment tape : Normal mode frequency response characteristics adjustment WR5-6C (PAL) WR5-6N (NTSC)
Measurement Point	Check connector (CH1 : CN102 pin ① (PB RF)
Measuring Instrument	Oscilloscope
Adjustment Page	F
Adjustment Address	38, 39 * (3A, 3B)
Specification Value	3.5MHz level : 5.5MHz level = 4 : (3.0 ± 0.2)

* : NTSC MODEL only

Adjustment procedure:

Order	Page	Address	Data	Procedure
1	6	00	01	After setting the data, press the PAUSE button. (Preparation)
2	F	38		Change data using PLAY and STOP buttons to adjust the level ration between 3.5MHz level and 5.5MHz level of the PB RF waveform of channel “1a” satisfies the specification. Press the PAUSE button. Playback mode.
3	F	39		Adjust the channel “2a” in the same way (address 39). Press the PAUSE button. Playback mode.
4	F	01		Read the data of page : F, address : 01, and record it.
*5	F	01	10	After setting the data, press the PAUSE button. (Forced LP head selection)
*6	F	3A		Change data using PLAY and STOP buttons to adjust the level ration between 3.5MHz level and 5.5MHz level of the PB RF waveform of channel “1a” satisfies the specification. Press the PAUSE button. Playback mode.
*7	F	3B		Adjust the channel “2a” in the same way (address 3B). Press the PAUSE button. Playback mode.
*8	F	01		Set the data which is recorded in step 4 to this address and press the PAUSE button.
9	6	00	00	After setting the data, press the PAUSE button. (End)

Note : Perform the adjustment steps from 4 to 8 in the NTSC model only.

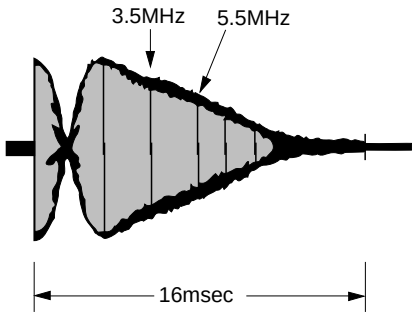

3-7. DEMD OUT LEVEL ADJUSTMENT

Purpose : The playback video level is kept to constant level.

Adjustment error : The playback picture can be brighter or darker than normal picture.

Mode	Playback
Signal	Alignment tape : Normal mode WR5-5CSP (PAL) WR5-5NSP (NTSC)
Measurement Point	IC201 pin ⑳ or CN102 pin ⑥
Measuring Instrument	Oscilloscope
Adjustment Page	F
Adjustment Address	33
Specification Value	A=0.50 ± 0.01Vp-p

Adjustment procedure:

Order	Page	Address	Data	Procedure
1	6	00	01	After setting the data, press the PAUSE button. (Preparation)
2	F	33		Change data using PLAY and STOP buttons so that the Y signal level (A) satisfies the specification.
3				Press the PAUSE button.
4	6	00	00	After setting the data, press the PAUSE button. (End)

PAL MODEL

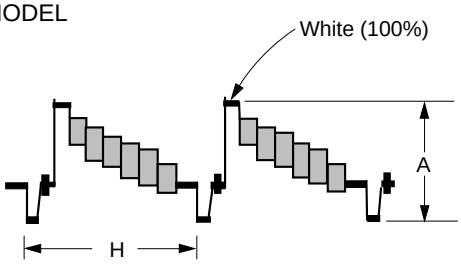

NTSC MODEL

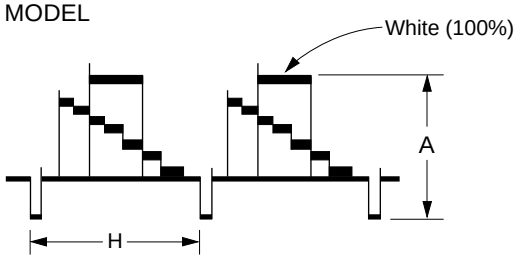

Fig. 6-3-1

3-8. YD OUT LEVEL ADJUSTMENT

Purpose : Minimizes the residual chroma component of Y comb filter output signal.

Adjustment error : Chroma flicker at video out (pin jack) of VTR overall characteristics. Color variations also significant.

Mode	Playback
Signal	Alignment tape : Normal mode WR5-5CSP (PAL) WR5-5NSP (NTSC)
Measurement Point	IC201 pin ㉔ or CN102 pin ⑤
Measuring Instrument	Oscilloscope
Adjustment Page	F
Adjustment Address	3C
Specification Value	A=0.50 ± 0.01Vp-p

Note : Minimize the residual chroma to the smallest amplitude

Adjustment procedure:

Order	Page	Address	Data	Procedure
1	6	00	01	After setting the data, press the PAUSE button. (Preparation)
2	F	3C		Change data using PLAY and STOP buttons so that the Y signal level (A) satisfies the specification.
3				Press the PAUSE button.
4	6	00	00	After setting the data, press the PAUSE button. (End)

PAL MODEL

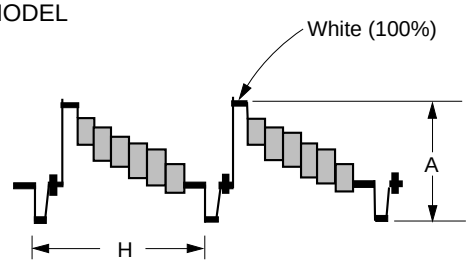

NTSC MODEL

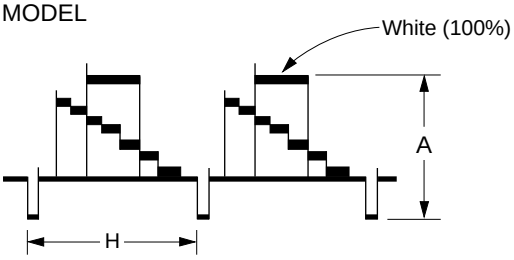

Fig. 6-3-2

Related Adjustments:
"Emphasis input level adjustment", "PB Y level adjustment", "Y FM carrier frequency adjustment"

3-9. PB CHROMA LEVEL CHECK

Purpose : The playback chroma level is kept to constant level.

Adjustment error : Color of playback picture can be thinner or thicker than normal picture.

Mode	Playback
Signal	Alignment tape : color bar segment of operation check tape • Normal mode WR5-5CSP (PAL) WR5-5NSP (NTSC)
Measurement Point	CN102 pin ⑥
Measuring Instrument	Oscilloscope
Adjustment Page	—
Adjustment Address	—
Specification Value	A=150 ± 15mVp-p (BURST LEVEL)

Adjustment procedure:

Order	Page	Address	Data	Procedure
1	—	—	—	Playback the color bar segment of the normal mode alignment tape.
2	—	—	—	Check that the burst signal level satisfies the specification.

PAL MODEL

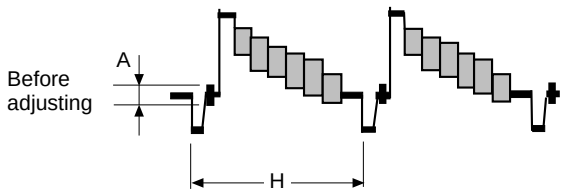

NTSC MODEL

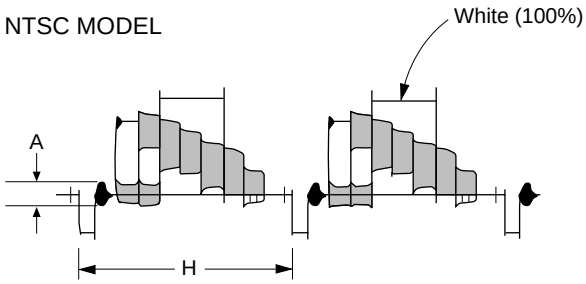

3-10. PB Y OUT LEVEL ADJUSTMENT

Purpose : Adjusts playback video level for the specification value.

Adjustment error : Playback picture can be too brighter or too darker than normal picture.

Mode	Playback
Signal	Alignment tape : color bar segment of operation check tape • Normal mode WR5-5CSP (PAL) WR5-5NSP (NTSC)
Measurement Point	VIDEO output terminal (terminated in 75Ω)
Measuring Instrument	Oscilloscope
Adjustment Page	F
Adjustment Address	32
Specification Value	A=1.00 ± 0.05Vp-p

Adjustment procedure:

Order	Page	Address	Data	Procedure
1	6	00	01	After setting the data, press the PAUSE button. (Preparation)
2				Playback the color bar segment of the normal alignment tape.
3	F	32		Change data using PLAY and STOP buttons so that the playback signal level (A) satisfies the specification.
4				Press the PAUSE button.
5	6	00	00	After setting the data, press the PAUSE button. (End)

PAL MODEL

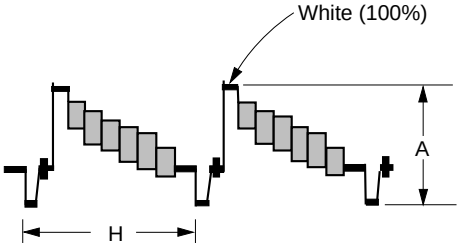

NTSC MODEL

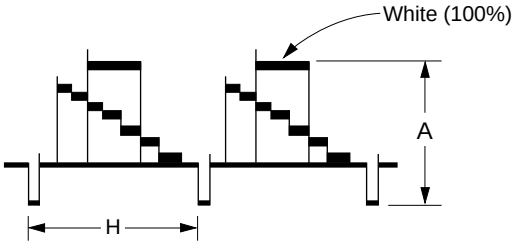

3-11. FE OSC CHECK

Purpose : Check the oscillating frequency and level of the flying erase (FE) signal.

Adjustment error : If REC-PAUSE recording is repeated, un-erased area is left in the junctions between the editings which results in increase of noise or previous picture can be seen.

Mode	CAM-REC
Signal	Any signal
Measurement Point	CN101 pin ⑯
Measuring Instrument	Oscilloscope and frequency counter
Adjustment Page	—
Adjustment Address	—
Specification Value	A=7.0Vp-p or more (MP mode) A=6.0 ± 1.0Vp-p (ME mode) f=7.2 ± 0.5MHz (MP/ME mode)

Adjustment procedure:

Order	Page	Address	Data	Procedure
1				Insert a normal MP type tape.
2				Make a recording.
3				Check that the FE signal level satisfies the specification.
4				Check that the FE signal frequency satisfies the specification.
5				Insert a normal ME type tape.
6				Make a recording.
7				Check that the FE signal level satisfies the specification.
8				Check that the FE signal frequency satisfies the specification.

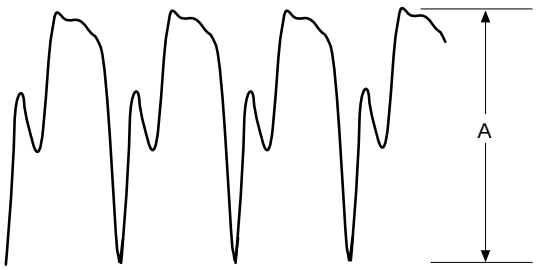

f=7.2 ±0.5MHz

3-12. EMPHASIS INPUT LEVEL ADJUSTMENT

Purpose : Adjusts the record emphasis characteristics to the specification value.

Adjustment error : Luminance signal smear, blurred picture, too much emphasized edge of overall video characteristics.

Mode	CAM-REC
Signal	Color bar chart
Measurement Point	• CN102 Pin ④ • VIDEO output terminal (terminated in 75Ω)
Measuring Instrument	Oscilloscope
Adjustment Page	F
Adjustment Address	31
Specification Value	A=(Vo × 0.96 × 500) mVp-p ± 2%

Adjustment procedure:

Order	Page	Address	Data	Procedure
1	6	00	01	After setting the data, press the PAUSE button. (Preparation)
2	6	01		Read the data of page : 6, address : 01, and record it.
3	6	01	47	After setting the data, press the PAUSE button.
4				Measure amplitude of the VIDEO OUT. The measured value is "Vo"[V].
5	F	31		Change data using PLAY and STOP buttons so that the Y signal level at CN102 pin④ (A) satisfies the specification.
6				Press the PAUSE button.
7	6	01		Set the data which is recorded in step 2 to this address and, press the PAUSE button.
8	6	00	00	After setting the data, press the PAUSE button. (End)

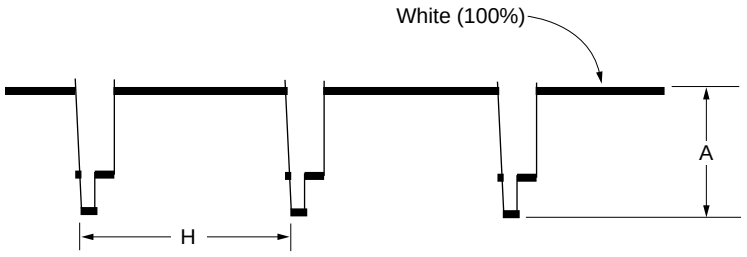

3-13. Y FM DEVIATION ADJUSTMENT (NOTE)

Purpose : Adjusts the FM signal to be recorded on tape to the 8mm format. (Adjusts the frequency deviation of normal mode Y FM signal.)

Adjustment error : Too bright or too dark overall picture. Overmodulation picture. (If deviation is too wide, or too narrow.)

Mode	CAM-REC and playback
Signal	Color bar chart
Measurement Point	• VIDEO output terminal (terminated in 75Ω)
Measuring Instrument	Oscilloscope
Adjustment Page	F
Adjustment Address	2F
Specification Value	A=(Vo × 0.96)Vp-p ± 2%

Note : The "Emphasis input level adjustment", "PB Y level adjustment", must have already been completed.

Adjustment procedure:

Order	Page	Address	Data	Procedure
1				Insert a normal MP type tape.
2	6	00	01	After setting the data, press the PAUSE button. (Preparation)
3	6	01		Read the data of page : 6, address : 01, and record it.
4	6	01	47	After setting the data, press the PAUSE button.
5				Shoot and record the color bar chart. The video out level at that setup is "Vo".
6				Playback the recorded signal.
7				Compare the playback signal level (A) with the specification value. If the specification value is satisfied, the adjustment is complete.
8	F	2F		If the specification value is satisfied, change data using PLAY and STOP buttons. • If the playback signal level is bigger than the specification value, decrease the data. • If the playback signal level is smaller than the specification value, increase the data.
9				Press the PAUSE button.
10				Return to step 4.
11	6	01		Set the data which is recorded is step 3 to this address and, press the PAUSE button.
12	6	00	00	After setting the data, press the PAUSE button. (End)

Related Adjustments:

"Normal mode Y FM deviation adjustment"

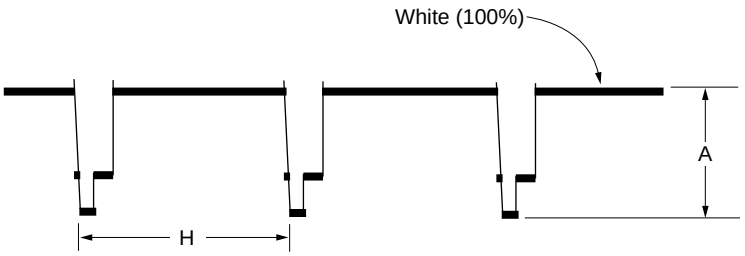

3-14. Y FM CARRIER FREQUENCY ADJUSTMENT

Purpose : Adjusts the FM signal to be recorded on tape to the 8 mm format. (Adjusts the carrier frequency of normal mode Y FM signal.)

Adjustment error : (If frequency is low) Overall picture will be blurred signal. (If frequency is high) Overall picture will have black streaking noise. S/N will be deteriorated.

Mode	CAM-REC
Signal	Any signal
Measurement Point	IC201 pin ㊶
Measuring Instrument	Frequency counter, Oscilloscope
Adjustment Page	F
Adjustment Address	30
Specification Value	4.20 ± 0.01MHz

Adjustment procedure:

Order	Page	Address	Data	Procedure
1	6	00	01	After setting the data, press the PAUSE button. (Preparation)
2	6	01	43	After setting the data, press the PAUSE button.
3	F	30		Change data using PLAY and STOP buttons so that the carrier frequency satisfies the specification. (Record mode)
4				Press the PAUSE button.
5	6	01	00	After setting the data, press the PAUSE button.
6	6	00	00	After setting the data, press the PAUSE button. (End)

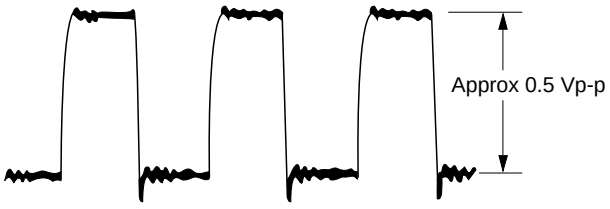

4.20 ±0.01MHz

3-15. CHROMA EMPHASIS fo ADJUSTMENT

Purpose : Adjust fo of the chroma emphasis to the specified frequency range.

Adjustment error : The bust and chroma level becomes too big during playback.

Mode	Playback
Signal	Color bar signal WR5-5CSP (PAL) WR5-5NSP (NTSC)
Measurement Point	• VIDEO output terminal (terminated in 75Ω)
Measuring Instrument	Oscilloscope
Adjustment Page	F
Adjustment Address	34
Specification Value	Minimizes the chroma component (A in the following diagram)

Adjustment procedure:

Order	Page	Address	Data	Procedure
1	6	00	01	After setting the data, press the PAUSE button. (Preparation)
2	F	34		Change data so that the chroma component (A) is minimized.
3				Press the PAUSE button.
4	6	00	00	After setting the data, press the PAUSE button. (End)

PAL MODEL

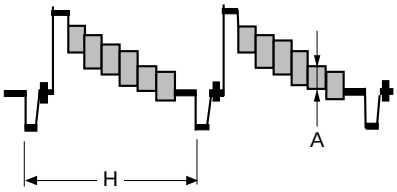

NTSC MODEL

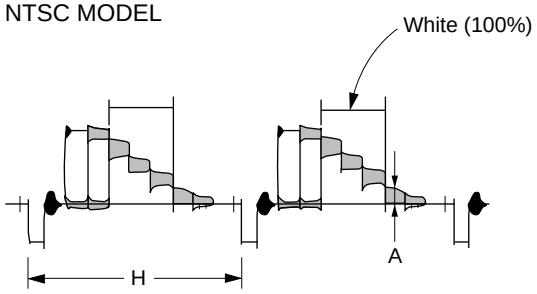

3-16. REC Y LEVEL ADJUSTMENT

Purpose : Maintains a constant level of Y FM, chroma AFM and ATF signals when recording on tape.

Adjustment error : (If level is low) Poor S/N of playback picture
(If level is high) Black streaking noise appears.

Connection : Connect CN102 pin ⑧ (RF SWP) to GND.

Mode	CAM-REC (SP)
Signal	No signal
Measurement Point	CN102 pin ② (check connector)
Measuring Instrument	Oscilloscope (Note)
Adjustment Page	F
Adjustment Address	35
Specification Value	A=132 ± 5mVp-p (PAL) A=155 ± 5mVp-p (NTSC)

Note : Use the MP type tape. If an oscilloscope has the bandwidth limiting switch, set to on position.

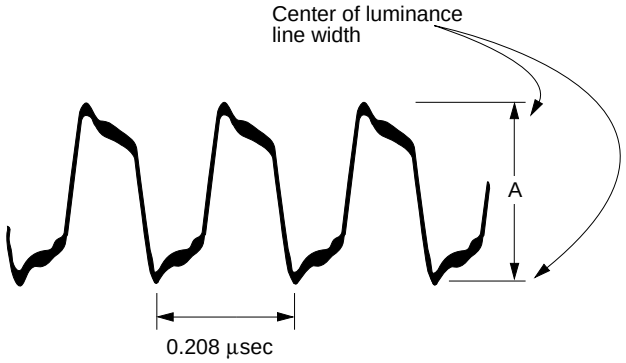

Adjustment procedure:

Order	Page	Address	Data	Procedure
1	6	00	01	After setting the data, press the PAUSE button. (Preparation)
2				Insert the MP tape to establish record mode.
3	6	01		Read the data of page : 6, address : 01, and record it.
4	6	01	43	After setting the data, press the PAUSE button.
5	F	35		Change data using PLAY and STOP buttons so that the REC Y RF level (A) satisfies the specification.
6				Press the PAUSE button.
7	6	01		Set the data which is recorded in step 3 to this address and, press the PAUSE button.
8	6	00	00	After setting the data, press the PAUSE button. (End)

3-17. REC C LEVEL ADJUSTMENT

Purpose : Maintains a constant chroma level when recording on tape.

Adjustment error : If level is low, overall S/N deteriorates.
If level is high, S/N of Y signal at deep color deteriorates and white streaking noise appears.

Mode	CAM-REC
Signal	White pattern (See page 6-2)
Measurement Point	• CN102 pin ② (Check connector) • VIDEO output terminal (terminated in 75Ω)
Measuring Instrument	Oscilloscope
Adjustment Page	F
Adjustment Address	37
Specification Value	$A=\left(23.5\times\frac{\overline{Vo}}{700}\right)$mVp-p ± 2mVp-p (PAL) $A=\left(32.4\times\frac{\overline{Vo}}{714}\right)$mVp-p ± 2mVp-p (NTSC)

Adjustment procedure:

Order	Page	Address	Data	Procedure
1				Shoot the all white pattern to the full picture frame.
2	6	00	01	After setting the data, press the PAUSE button. (Preparation)
3	6	01		Read the data pf page : 6, address : 01, and record it.
4	6	01	45	After setting the data, press the PAUSE button.
5				Measure the chroma output level of the VIDEO OUT connector. Obtain the average value of three points (beginning, middle, end) of a vertical period. Call the average value $\overline{Vo}$ (mV).
6	F	37		Change data using PLAY and STOP buttons so that the REC signal at CN102 pin ② amplitude (A) satisfies the specification.
7				Press the PAUSE button.
8	6	01		Set the data which is recorded in step 3 to this address and, press the PAUSE button.
9	6	00	00	After setting the data, press the PAUSE button. (End)

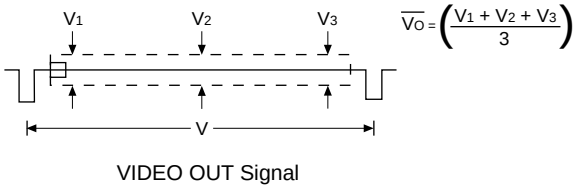

VIDEO OUT Signal

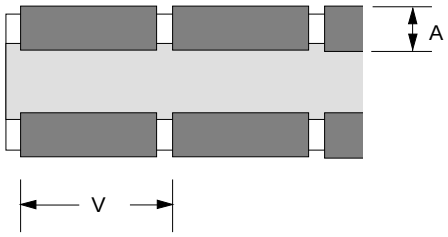

6-4. AUDIO SYSTEM ADJUSTMENT

- The right channel (STEREO) adjustment is performed in STEREO MODEL only.
- Use the alignment tape for audio system adjustment.
- Connect an audio input signal from VC-188 board CN501 as shown in Fig.6-4-1.

Alignment tape

〈MONO model〉	WR5-5CSP : PAL
	WR5-5NSP : NTSC
〈STEREO〉	WR5-9CS : PAL
	WR5-9NS : NTSC

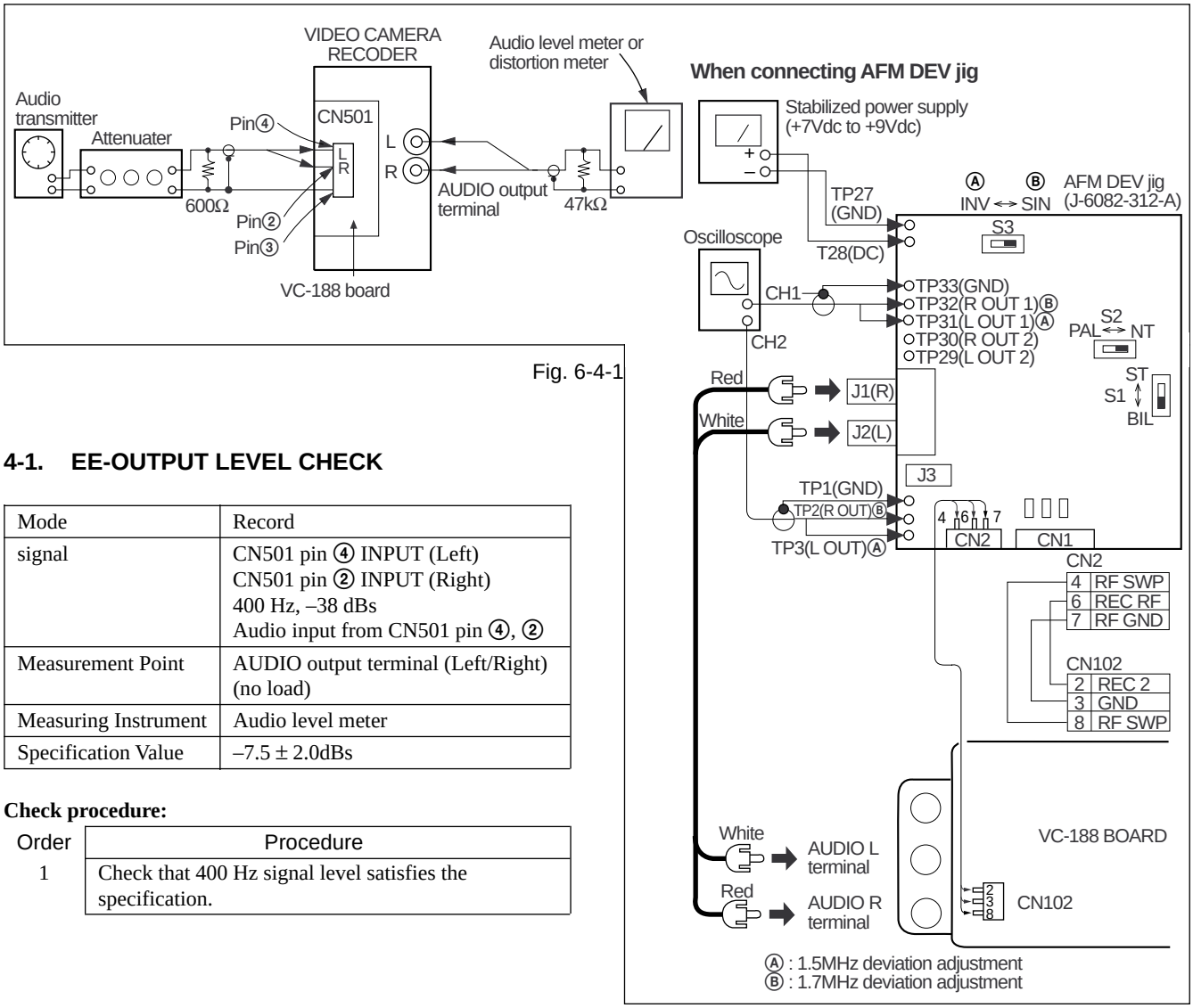

Fig. 6-4-1

4-1. EE-OUTPUT LEVEL CHECK

Mode	Record
signal	CN501 pin ④ INPUT (Left) CN501 pin ② INPUT (Right) 400 Hz, –38 dBs Audio input from CN501 pin ④, ②
Measurement Point	AUDIO output terminal (Left/Right) (no load)
Measuring Instrument	Audio level meter
Specification Value	–7.5 ± 2.0dBs

Check procedure:

Order	Procedure
1	Check that 400 Hz signal level satisfies the specification.

4-2. 1.5 MHz DEVIATION ADJUSTMENT (STEREO MODEL)

Purpose : Determines spectrum of the modulated L-ch (L+R/2 signal) signal during recording.

Adjustment error : Audio signal crosstalk deteriorates and audio level decreases in both record and playback modes.

Mode	Record
Signal	AFM DEV adjustment tool output signal to left and right channels of audio input connector
Measurement Point	CH1 : TP31 of the AFM DEV adjustment tool CH2 : TP3 of the AFM DEV adjustment tool
Measuring Instrument	Oscilloscope ADD mode CH2 INV mode
Adjustment Page	F
Adjustment Address	2C
Specification Value	Difference (A) between CH1 and CH2 signals is 40mV or less.

Connection

1) Connect CH2 of the AFM DEV adjustment tool and CN102 of VC-188 board.
2) Connect the audio output terminals (J1, J2) of the AFM DEV adjustment tool and Video/Audio input/output connector of the machine to be adjusted.
3) Connect DC power supply (+7 to +9V dc) to TP28 (DC), and TP27 (GND) of the AFM DEV adjustment tool.
4) Set the switches of the AFM DEV adjustment tool to the following positions.
   S1 ——— BIL position
   S2 ——— NT position
   S3 ——— SIN position

Adjustment procedure:

Order	Page	Address	Data	Procedure
1				Select the same vertical sensitivity of CH1 and CH2 of oscilloscope.
2				Set the oscilloscope to ADD mode and set CH2 to INV mode.
3	6	00	01	After setting the data, press the PAUSE button. (Preparation)
4	F	2C		Change data using PLAY and STOP buttons so that the audio level difference (A) is minimized.
5				Press the PAUSE button.
6	6	00	00	After setting the data, press the PAUSE button. (End)

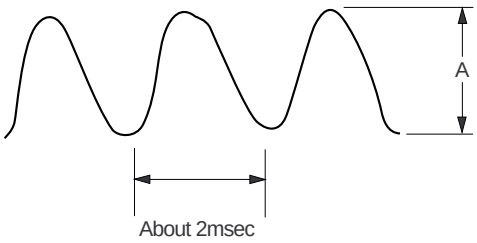

4-3. 1.7MHz DEVIATION ADJUSTMENT (STEREO MODEL)

Purpose : Determines spectrum of the modulated R-ch (L-R/2 signal) signal during recording.

Adjustment error : Audio signal crosstalk deteriorates and audio level decreases in both record and playback modes.

Mode	Record
Signal	AFM DEV adjustment tool output signal to left and right channels of audio input connector
Measurement Point	CH1: TP32 of the AFM DEV adjustment tool CH2: TP2 of the AFM DEV adjustment tool
Measuring Instrument	Oscilloscope ADD mode CH2 INV mode
Adjustment Page	F
Adjustment Address	2D
Specification Value	Difference (A) between CH1 and CH2 signals is 40mV or less.

Connection

1) Connect CH2 of the AFM DEV adjustment tool and CN102 of VC-188 board.
2) Connect the audio output terminals (J1, J2) of the AFM DEV adjustment tool and Video/Audio input/output connector of the machine to be adjusted.
3) Connect DC power supply (+7 to +9Vdc) to TP28 (DC), and TP27 (GND) of the AFM DEV adjustment tool.
4) Set the switches of the AFM DEV adjustment tool to the following positions.
   S1 ——— BIL position
   S2 ——— NT position
   S3 ——— INV position

Adjustment procedure:

Order	Page	Address	Data	Procedure
1				Select the same vertical sensitivity of CH1 and CH2 of oscilloscope.
2				Set the oscilloscope to ADD mode and set CH2 to INV mode.
3	6	00	01	After setting the data, press the PAUSE button. (Preparation)
4	F	2D		Change data using PLAY and STOP buttons so that the audio level difference (A) is minimized.
5				Press the PAUSE button.
6	6	00	00	After setting the data, press the PAUSE button. (End)

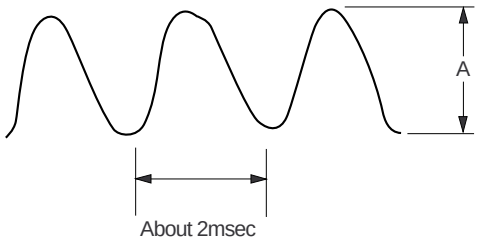

4-4. 1.5MHz DEVIATION ADJUSTMENT (MONO MODEL)

Purpose : 1.5MHz deviation adjustment. Error in this adjustment value means loss of tape inter change ability.

Mode	Playback
Signal	Alignment tape : For checking operations WR5-5CSP : PAL WR5-5NSP : NTSC
Measurement	AUDIO output terminal.
Measuring Instrument	Oscilloscope, level meter
Adjustment Page	F
Adjustment Address	2C
Specified Value	–7.5 ± 0.5dBs

Adjustment method:

Order	Page	Address	Data	Procedure
1	6	00	01	After setting the data, press the PAUSE button. (Preparation)
2	F	2C		Change the data with the PLAY and STOP buttons, and adjust the 400Hz signal level to specified value.
3				Press the PAUSE button.
4	6	00	00	After setting the data, press the PAUSE button. (End)

4-5. BPF fo ADJUSTMENT

Purpose : Optimizes fo of BPF inside IC.
Adjustment error : Incorrect discrimination of monaural/stereo and increase of noise at high output of audio volume are resulted.

Mode	Playback
Signal	Alignment tape ⟨MONO model⟩ WR5-5CSP : PAL WR5-5NSP : NTSC ⟨STEREO model⟩ WR5-9CS : PAL WR5-9NS : NTSC
Measurement Point	AUDIO output terminal (Left/Right)
Measuring Instrument	Audio level meter
Adjustment Page	F
Adjustment Address	2E
Specification Value	Distortion : 1% or less.

Adjustment procedure:

Order	Page	Address	Data	Procedure
1	6	00	01	After setting the data, press the PAUSE button. (Preparation)
2				Playback the 400Hz segment of the alignment tape.
3	F	2E		Change data using PLAY and STOP buttons so that distortion factor is minimized.
4				Press the PAUSE button.
5	6	00	00	After setting the data, press the PAUSE button. (End)

4-6. OVERALL SIGNAL LEVEL, DISTORTION AND SEPARATION CHECK

Mode	CAM-REC and playback
Signal	① CN501 pin ④ :400Hz, –38dBs CN501 pin ② : No signal *② CN501 pin ④ :No signal CN501 pin ② :400Hz, –38dBs
Measurement Point	AUDIO output terminal (Left) *AUDIO output terminal (Right)
Measurement Instrument	Audio level meter and distortion meter
Specification Value	Signal level (Note) ① Left output : –7.5 ± 2dBs Right output : –27.5dBs or less *② Left output : –27.5dBs or less Right output : –7.5 ± 2dBs Distortion Left/Right output : 0.8% or less

Note 1 : The value when band-pass filter of 200Hz to 6kHz is used.
Note 2 : Asterisk marks (*) are used in STEREO model.

Check procedure:

Order	Procedure
1	Input 400Hz, –38dBs signal to CN501 pin ④. Short pin ② and ③ of CN501.
2	Check that the right and left channels of AUDIO output terminal satisfy the specification ①. Check that distortion satisfies the specification.
*3	Input 400Hz, –38dBs signal to CN501 pin ②. Short pin ③ and ④ of CN501.
*4	Check that the right and left channels of AUDIO output terminal satisfy the specification ②. Check that distortion satisfies the specification.

4-7. OVERALL NOISE LEVEL CHECK

Purpose : Checks noise level.

Mode	CAM-REC and playback
Signal	No signal : VC-188 board CN501 (Note)
Measurement Point	AUDIO output terminal (Left/Right)
Measuring Instrument	Audio level meter (using IHF-A curve weighting filter)
Specification Value	–65dBs or less

Note : Before making short circuit between CN501 pin ③ and pin ④, pin ③ and pin ② (STEREO model only), remove the flexible board from CN501

Check procedure:

Order	Procedure
1	Insert a shorting to pin ③ and pin ④, pin ③ and pin ② (STEREO model only) as CN501.
2	Make recording.
3	Remove the shorting plug.
4	Playback the recorded segment.
5	Confirm that the noise level at audio output terminal (Left/Right) is –65dBs or less.

6-5. INFRARED TRANSMIT CIRCUIT ADJUSTMENT (IR MODEL)

5-1. PREPARATIONS

1. Equipment connection

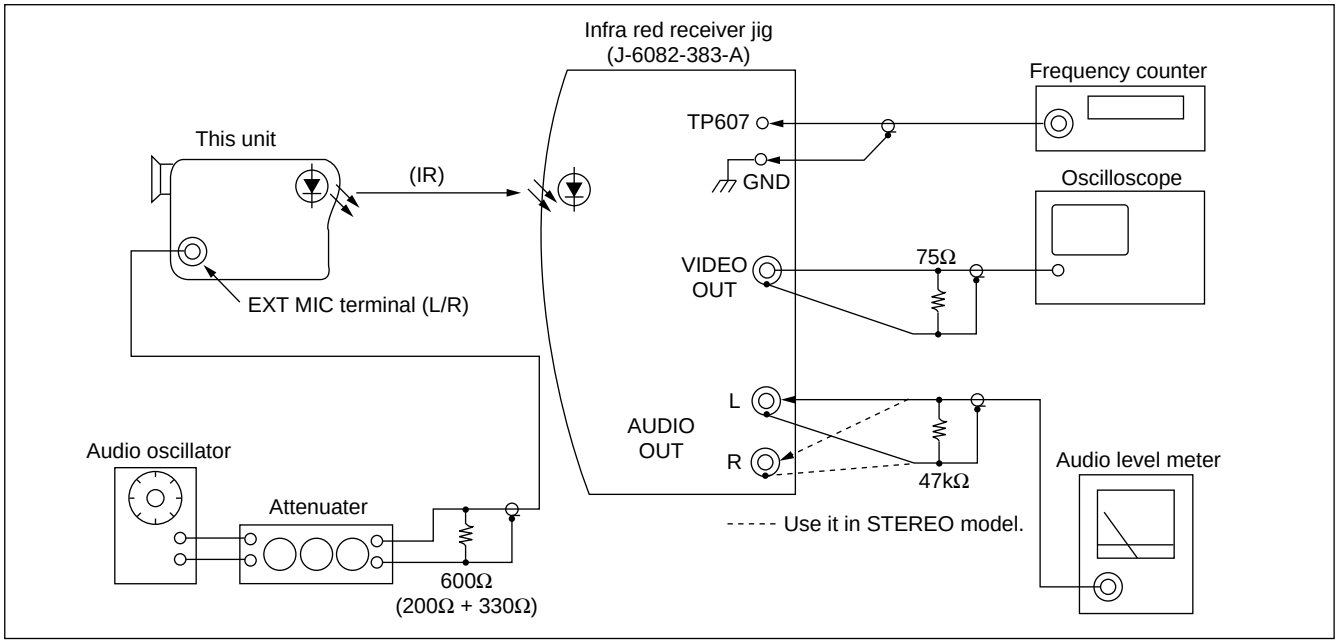

Resistors 75Ω : 1-247-804-11
270Ω : 1-249-410-11
330Ω : 1-249-411-11
47kΩ : 1-249-437-11

2. Switch setting

IR switch (VC-188 board S308) ····· ON

5-2. VIDEO CARRIER FREQUENCY ADJUSTMENT

Purpose : Adjusts the carrier frequency when modulating the video signal.

Adjustment error : Loss of synchronization or loss of color.

Mode	CAM-STANDBY
Signal	Any signal
Measurement Point	TP607 of the IR receiver jig or IC001 pin ⑯ of IR-28board.
Measuring Instrument	Frequency counter, Oscilloscope
Adjustment Page	F
Adjustment Address	5C
Specification Value	11.83 ± 0.01MHz

Adjustment procedure:

Order	Page	Address	Data	Procedure
1	6	00	01	After setting the data, press the PAUSE button. (Preparation)
2	6	01		Read the data pf page : 6, address : 01, and record it.
3	6	01	47	After setting the data, press the PAUSE button.
4	F	5C		Change data using PLAY and STOP buttons so that the Y signal level (A) satisfies the specification. (Record mode)
5				Press the PAUSE button.
6	6	01		Set the data which is recorded in step 2 to this address and, press the PAUSE button.
7	6	00	00	After setting the data, press the PAUSE button. (End)

IR-28 BOARD (SIDE A)

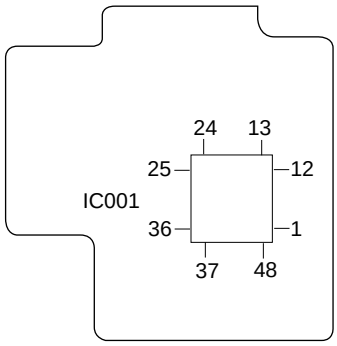

5-3. VIDEO DEVIATION ADJUSTMENT

Purpose : Adjusts deviation when modulating the video signal.

Adjustment error : Too bright or too dark overall picture. Overmodulation picture. (If deviation is too wide, or too narrow.)

Mode	CAM-STANDBY
Signal	Any signal
Measurement Point	• VIDEO OUTPUT terminal of the unit (Terminated in 75Ω) • VIDEO OUTPUT terminal of IR receiver jig (Terminated in 75Ω)
Measuring Instrument	Oscilloscope
Adjustment Page	F
Adjustment Address	5D
Specification Value	B=Vo ± 0.05Vp-p

Adjustment procedure:

Order	Page	Address	Data	Procedure
1	6	00	01	After setting the data, press the PAUSE button. (Preparation)
2	6	01		Read the data pf page : 6, address : 01, and record it.
3	6	01	47	After setting the data, press the PAUSE button.
4				Record the output level “A” of the VIDEO OUTPUT terminal of the unit, as Vo. (Vo ≒ 1.0 ± 0.05Vp-p)
5	F	5D		Change data using PLAY and STOP buttons so that the Y signal level (B) satisfies the output (B) specifications of the VIDEO OUTPUT terminal of IR receiving jig.
6				Press the PAUSE button.
7	6	01		Set the data which is recorded in step 2 to this address and, press the PAUSE button.
8	00	00	00	After setting the data, press the PAUSE button. (End)

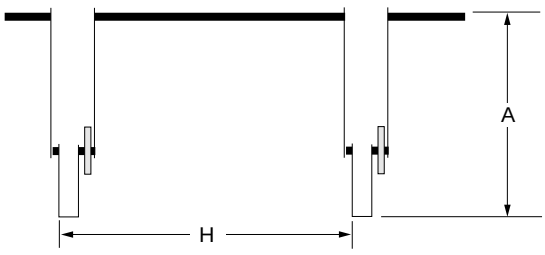

5-4. AUDIO DEVIATION ADJUSTMENT

Purpose : Adjusts deviation when modulating the audio signal.

Adjustment error : Loss of tape iner change ability.

Mode	CAM-REC
Signal	EXT MIC terminal (L-ch and R-ch) of the unit 400Hz, –66dBs
Measurement Point	AUDIO output terminal (L/R) of IR receiver jig
Measuring Instrument	Audio level
Adjustment Page	F
Adjustment Address	5E
Specification Value	–7.5 ± 1.0dBs

Adjustment procedure:

Order	Page	Address	Data	Procedure
1	6	00	01	After setting the data, press the PAUSE button. (Preparation)
2				Input the audio signal of 400 Hz, –66dBs to the EXT MIC terminal (L-ch and R-ch) of the unit.
3	F	5E		Press the PLAY and STOP buttons until the audio signal level of both L-ch and R-ch satisfies the specifications.
4				Press the PAUSE button.
5	6	00	00	After setting the data, press the PAUSE button. (End)

FOR CAMERA COLOR REPRODUCTION ADJUSTMENT

(NTSC 760H)

Take a copy of CAMERA COLOR REPRODUCTION FRAME and Parts referencesheets with a clear sheet for use.

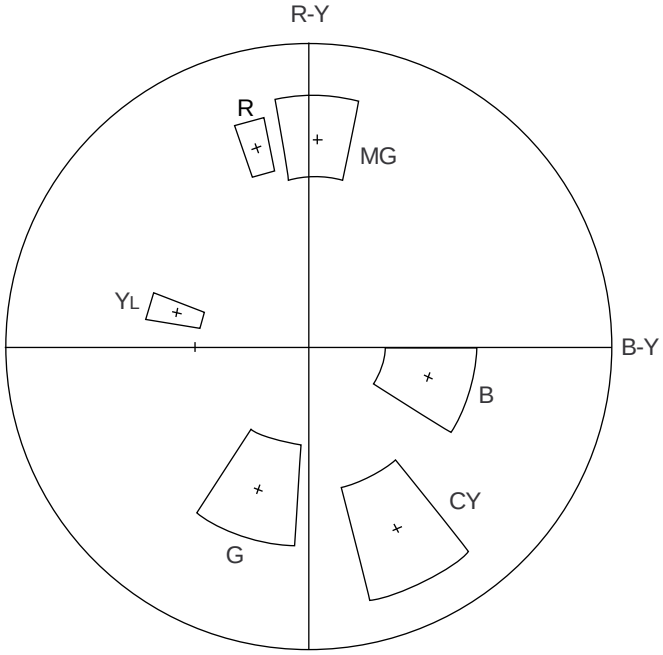

⟨PARTS REFERENCE SHEET⟩

You can find the parts position of location of mount locations applying to VC-188 board of a set.

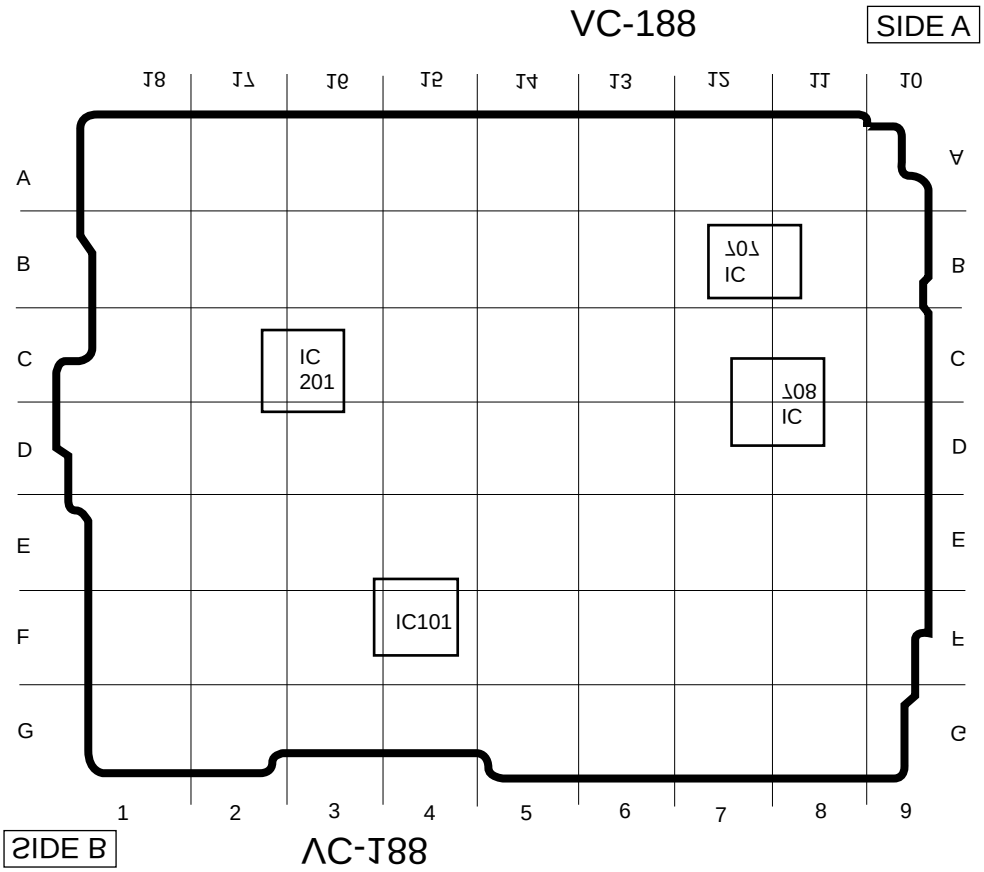

FOR CAMERA COLOR REPRODUCTION ADJUSTMENT

(PAL 510H/760H)

Take a copy of CAMERA COLOR REPRODUCTION FRAME and Parts referencesheets with a clear sheet for use.

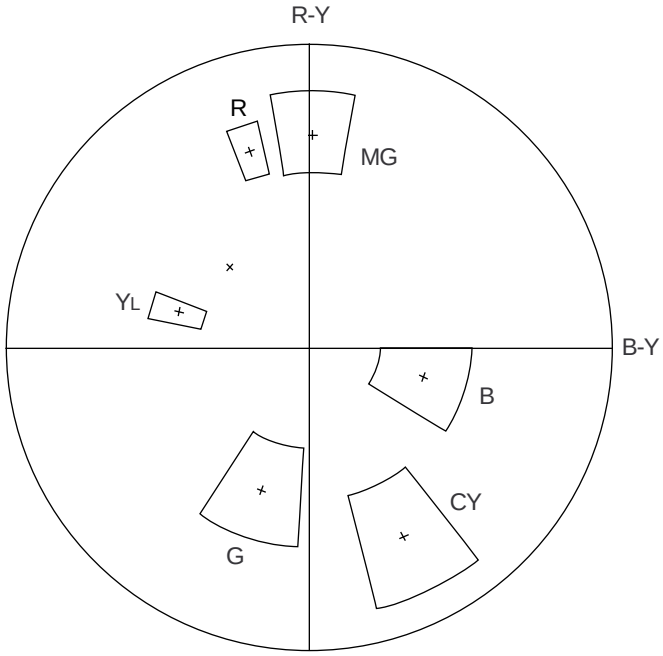

⟨PARTS REFERENCE SHEET⟩

You can find the parts position of location of mount locations applying to VC-188 board of a set.

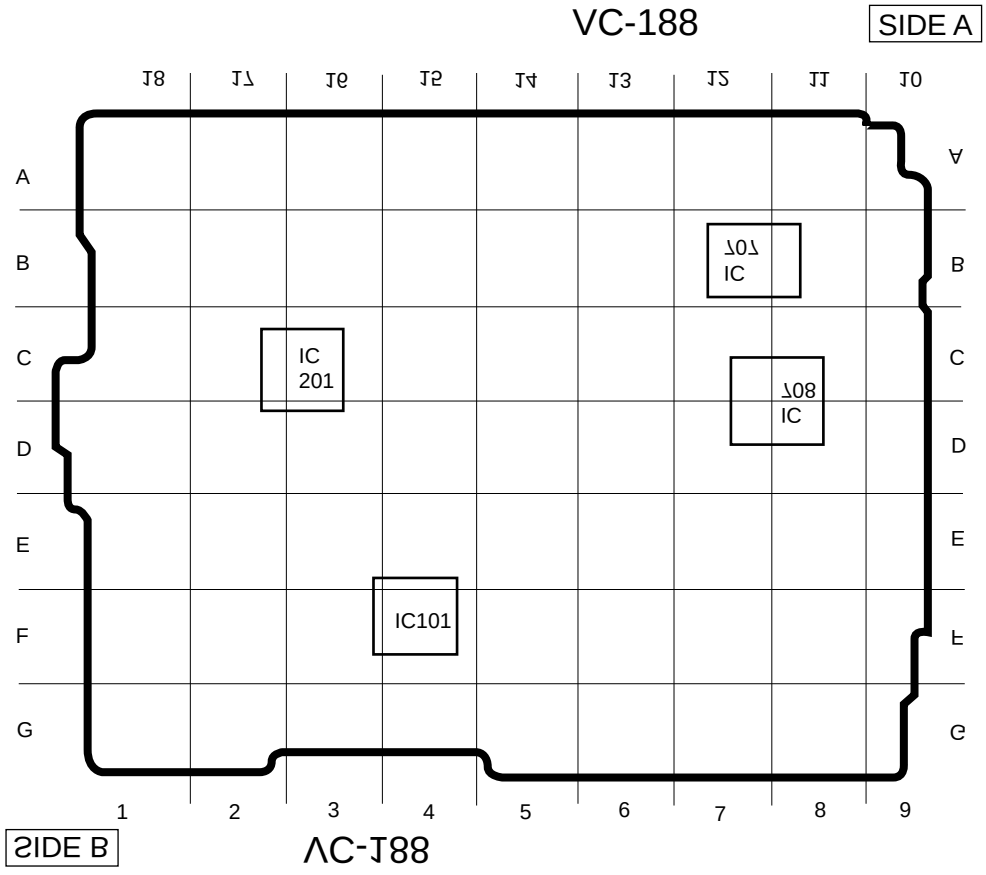

CCD-TRV32/TRV34/TRV34PK/TRV44/TRV52/TRV53/TRV312/TRV512(NTSC)
CCD-TRV14E/TRV24E/TRV44E(PAL)

9-973-939-11

Sony Corporation
Personal A&V Products Company

97B1694-1
Printed in Japan © 1997.2
Published by Quality Engineering Dept.
(Osaki East)